RECEIVED
AQD
NOV 04 2019
MACES
FILE App No. 20190018T
MAERS

FILE

November 4, 2019

Mr. William Rogers
Michigan EGLE
Air Quality Division
2100 West M-32
Gaylord, MI 49735

SUBJECT: East Jordan Foundry, LLC – Renewal Operating Permit Application

Dear Mr. Rogers:

Please find the enclosed Renewal Operating Permit Application for East Jordan Foundry, LLC.

If you have any questions, please contact me at (231) 536-4663 or tony.pitts@ejco.com.

Sincerely,

Tony A. Pitts
Environmental Services Manager

Enclosure: Renewal Operating Permit Application

cc: Mr. Bill Rogers, EGLE, (via email: rogersw@michigan.gov)

RECEIVED
AQD
NOV 04 2019
MACES FILE
MAERS
App No. 201900181

Renewal Operating Permit (ROP) Application

East Jordan Foundry, LLC
Elmira, Michigan

November 2019

RECEIVED
AQD
NOV 04 2019

Michigan Department of Environment, Great Lakes, and Energy - Air Quality Division

EGLE

RENEWABLE OPERATING PERMIT INITIAL APPLICATION
ASC-001 APPLICATION SUBMITTAL AND CERTIFICATION

MACES X MAERS
FILE

This information is required by Article II, Chapter 1, Part 55 (Air Pollution Control) of P.A. 451 of 1994, as amended, and the Federal Clean Air Act of 1990. Failure to obtain a permit required by Part 55 may result in penalties and/or imprisonment. Refer to "Renewable Operating Permit Initial Application Instructions" for additional information to complete the application.

App No. 201900181

Source Name: East Jordan Foundry, LLC	SRN: N6052	Section Number (if applicable):

Identify the items that are included as part of your administratively complete application in the checklist below. For your application to be complete, it must include information necessary to evaluate the source and to determine all applicable requirements. Answer the compliance statements as they pertain to all the applicable requirements to which the source is subject. A Responsible Official must sign and date this form.

Listing of ROP Application Contents. See the initial application instructions for guidance regarding which forms and attachments are required for your source. Check the box for the items included with your application.

☒	Completed ROP Initial Application Forms (required)	☐	Copies of all Consent Orders/Consent Judgments
☐	MAERS Forms (to report emissions not previously submitted)	☒	Compliance Plan/Schedule of Compliance
☒	HAP/Criteria Pollutant Potential to Emit Calculations	☐	Acid Rain Initial Permit Application
☐	Stack information	☐	Cross-State Air Pollution Rule (CSAPR) Information
☒	Copies of all active Permit(s) to Install (required)	☒	Additional Information (AI-001) Forms
☒	Compliance Assurance Monitoring (CAM) Plan	☒	Paper copy of all documentation provided (required)
☒	Other Plans (e.g., Malfunction Abatement, Fugitive Dust, Operation and Maintenance, etc.)	☒	Electronic documents provided (optional)
☐	Confidential Information	☐	Other, explain:

Compliance Statement

This source is in compliance with **all** of its applicable requirements, including those contained in Permits to Install, this application and other applicable requirements that the source is subject to. ☐ Yes ☒ No

This source will continue to be in compliance with all of its applicable requirements, including those contained in Permits to Install, this application and other applicable requirements that the source is subject to. ☐ Yes ☒ No

This source will meet, in a timely manner, applicable requirements that become effective during the permit term. ☒ Yes ☐ No

The method(s) used to determine compliance for each applicable requirement is/are the method(s) specified in the existing Permits to Install, this application and all other applicable requirements that the source is subject to.

If any of the above are checked No, identify the emission unit(s) or flexible group(s) affected and the applicable requirement for which the source is or will be out of compliance at the time of issuance of the ROP on an AI-001 Form. Provide a compliance plan and schedule of compliance on an AI-001 Form.

Name and Title of the Responsible Official (Print or Type)

Scott Nachazel Facility Manager

As a Responsible Official, I certify that, based on information and belief formed after reasonable inquiry, the statements and information in this application are true, accurate, and complete.

Scott Nachazel — **Signature of Responsible Official**

11-4-2019 — **Date**

For Assistance
Contact: 800-662-9278

www.michigan.gov/egle

EGLE

RENEWABLE OPERATING PERMIT APPLICATION
AI-001: ADDITIONAL INFORMATION

This information is required by Article II, Chapter 1, Part 55 (Air Pollution Control) of P.A. 451 of 1994, as amended, and the Federal Clean Air Act of 1990. Failure to obtain a permit required by Part 55 may result in penalties and/or imprisonment. Please type or print clearly. Refer to instructions for additional information to complete this form.

	SRN: N6052	Section Number (if applicable):

1. Additional Information ID
AI-ASC-001(1)

Additional Information

2. Is This Information Confidential? ☐ Yes ☒ No

Applicable Requirement: FGPOURCOOL I.7. SO2 emmission limit is 0.56 pph.

A "compliance plan" means a description of the compliance status of a source with respect to all applicable requirements for each process or process equipment as follows:
(i). For applicable requirements with which the source is in compliance, a statement that the source will continue to comply with the requirements.
(ii). For applicable requirements that will become effective during the permit term, a statement that the source will meet the requirements on a timely basis.
(iii).For applicable requirements for which the stationary source is not in compliance at the time of permit issuance, a narrative description of how the stationary source will achieve compliance with the requirements.

Compliance Plan:
A permit revision has been requested to increase the SO2 emission limit to 7.28 pph and 16.64 tpy. The initial limits were devloped from historical emission factors from WebFIRE. Once the revised PTI has been issued, the facility will be in compliance with the new limits.

A "schedule of compliance" means, for purposes of Rule 201 to Rule 218, all of the following:
(i). For a source not in compliance with all applicable requirements at the time of issuance of a renewable operating permit, a schedule of remedial measures, including an enforceable sequence of actions or operations that specifies milestones, leading to compliance with an applicable requirement, and a schedule for submission of certified progress reports, at least every 6 months. The schedule shall resemble, and be at least as stringent as, a schedule contained in a judicial consent decree or administrative order to which the source is subject. A schedule shall be supplemental to, and shall not sanction noncompliance with, the applicable requirement on which it is based.

Schedule of Compliance:
Revised PTI should be issued within 3 months of this application's submittal.

Michigan Department of Environment, Great Lakes, and Energy - Air Quality Division

EGLE

RENEWABLE OPERATING PERMIT INITIAL APPLICATION
S-001 STATIONARY SOURCE INFORMATION

This information is required by Article II, Chapter 1, Part 55 (Air Pollution Control) of P.A. 451 of 1994, as amended, and the Federal Clean Air Act of 1990. Failure to obtain a permit required by Part 55 may result in penalties and/or imprisonment. Refer to "Renewable Operating Permit Initial Application Instructions" for additional information to complete the application.

SRN: N6052	Section Number (if applicable):

SOURCE INFORMATION

SIC Code	NAICS Code
3321	331511

Source Name: East Jordan Foundry, LLC

Street Address: 2675 Noth US 131 , P.O. Box 218

City	State	ZIP Code	County
Elmira	MI	49730	Antrim

Section/Town/Range (if street address not available):

Source Description: East Jordan Foundry, LLC (EJF) operates a gray and ductile iron foundry which has the permitted capacity to melt 128,000 tpy via 4 electric induction furnaces (EIFs). Castings may be produced on two separate mold lines that share a sand system.

OWNER INFORMATION

Owner Name: East Jordan Foundry, LLC

Mailing address (☐ check if same as source address): 301 C Spring St.

City	State	ZIP Code	County	Country
East Jordan	MI	49727	Charlevoix	USA

☐ Check if an AI-001 Form is attached to provide more information for S-001. Enter AI-001 Form ID: **AI-**

EGLE

RENEWABLE OPERATING PERMIT INITIAL APPLICATION FORM
S-002 CONTACT AND RESPONSIBLE OFFICIAL INFORMATION

This information is required by Article II, Chapter 1, Part 55 (Air Pollution Control) of P.A. 451 of 1994, as amended, and the Federal Clean Air Act of 1990. Failure to obtain a permit required by Part 55 may result in penalties and/or imprisonment. Refer to "Renewable Operating Permit Initial Application Instructions" for additional information to complete the application.

SRN: N6052	Section Number (if applicable):

At least one contact and one Responsible Official must be identified. Additional contacts and Responsible Officials may be included if necessary.

CONTACT INFORMATION

Contact 1 Name			Title	
Tony Pitts			Environmental Services Manager	
Company Name & Mailing address (☐ check if same as source address)				
EJ USA, Inc.				
City	State	ZIP Code	County	Country
East Jordan	MI	49727	Charlevoix	USA
Phone number		E-mail address		
(231) 536-4663		tony.pitts@ejco.com		

Contact 2 Name (optional)			Title	
Tom Lenartowicz			Environmental and Safety Manager	
Company Name & Mailing address (☒ check if same as source address)				
City	State	ZIP Code	County	Country
Phone number		E-mail address		
(231) 536-4823		tom.lenartowicz@ejco.com		

RESPONSIBLE OFFICIAL INFORMATION

Responsible Official 1 Name			Title	
Scott Nachazel			Facility Manager	
Company Name & Mailing address (☒ check if same as source address)				
City	State	ZIP Code	County	Country
Phone number		E-mail address		
(231) 536-4531		scott.nachazel@ejco.com		

Responsible Official 2 Name (optional)			Title	
Company Name & Mailing address (☐ check if same as source address)				
City	State	ZIP Code	County	Country
Phone number		E-mail address		

☐ Check if an AI-001 Form is attached to provide more information for S-002. Enter AI-001 Form ID: **AI-**

EGLE

RENEWABLE OPERATING PERMIT INITIAL APPLICATION
S-003 SOURCE REQUIREMENT INFORMATION

This information is required by Article II, Chapter 1, Part 55 (Air Pollution Control) of P.A. 451 of 1994, as amended, and the Federal Clean Air Act of 1990. Failure to obtain a permit required by Part 55 may result in penalties and/or imprisonment. Refer to "Renewable Operating Permit Initial Application Instructions" for additional information to complete the application.

SRN: N6052	Section Number (if applicable):

SOURCE REQUIREMENT INFORMATION

Answer the questions below for specific requirements or programs to which the source may be subject. Refer to the ROP Initial Application Instructions for additional information.

1.	Actual emissions and associated data from **all** emission units with applicable requirements are required to be reported in MAERS. Are there any emissions and associated data that have not been reported in MAERS for the most recent emissions reporting year? If Yes, identify the emission unit(s) that was/were not reported in MAERS on an AI-001 Form. Applicable MAERS form(s) for unreported emission units must be included with this application.	☐ Yes ☒ No
2.	Is this source subject to the federal regulations on ozone-depleting substances? (40 CFR Part 82)	☒ Yes ☐ No
3.	a. Is this source subject to the federal Chemical Accident Prevention Provisions? (Section 112(r) of the Clean Air Act Amendments, 40 CFR Part 68) If Yes, a Risk Management Plan (RMP) and periodic updates must be submitted to the USEPA. b. Has an updated RMP been submitted to the USEPA?	☐ Yes ☒ No ☐ Yes ☐ No
4.	Does the source belong to one of the source categories that require quantification of fugitive emissions? If Yes, identify the category on an AI-001 Form and include the fugitive emissions in the PTE calculations for the source. *See ROP Initial Application instructions.*	☒ Yes ☐ No
5.	Does this stationary source have the potential to emit (PTE) of 100 tons per year or more of any criteria pollutant (PM-10, PM 2.5, VOC, NOx, SO_2, CO, lead)? If Yes, include potential emission calculations for each identified pollutant on an AI-001 Form.	☒ Yes ☐ No
6.	Does this stationary source emit any hazardous air pollutants (HAPs) regulated by the federal Clean Air Act, Section 112? If Yes, include potential and actual emission calculations for HAPs, **including fugitive emissions** on an AI-001 Form.	☒ Yes ☐ No
7.	a. Are any emission units subject to Compliance Assurance Monitoring (CAM)? If Yes, identify the specific emission unit(s) and pollutant(s) subject to CAM on an AI-001 Form. b. Is a CAM plan included with this application on an AI-001 Form?	☒ Yes ☐ No ☒ Yes ☐ No
8.	Does the source have any active Consent Orders/Consent Judgments (CO/CJ)? If Yes, attach a copy of each CO/CJ on an AI-001 Form.	☐ Yes ☒ No
9.	Are any emission units subject to the federal Cross State Air Pollution Rule (CSAPR)? If Yes, identify the specific emission unit(s) subject to CSAPR on an AI-001 Form.	☐ Yes ☒ No
10.	a. Are any emission units subject to the federal Acid Rain Program? If Yes, identify the specific emission unit(s) subject to the Federal Acid Rain Program on an AI-001 Form. b. Is an Acid Rain Permit Application included with this application?	☐ Yes ☒ No ☐ Yes ☒ No
11.	Does the source have any required plans such as a malfunction abatement plan, fugitive dust plan, operation/maintenance plan, startup/shutdown plans or any other monitoring plan? If Yes, then the plan(s) must be submitted with this application on an AI-001 Form.	☒ Yes ☐ No
12.	Are there any specific requirements that the source proposes to be identified in the ROP as non-applicable? If Yes, then the requirement and justification must be submitted on an AI-001 Form.	☐ Yes ☒ No
☒	Check if an AI-001 Form is attached to provide more information for S-003. Enter AI-001 Form ID: **AI-**S-003(4),(5),(6),(7),(11)	

EGLE

RENEWABLE OPERATING PERMIT APPLICATION
AI-001: ADDITIONAL INFORMATION

This information is required by Article II, Chapter 1, Part 55 (Air Pollution Control) of P.A. 451 of 1994, as amended, and the Federal Clean Air Act of 1990. Failure to obtain a permit required by Part 55 may result in penalties and/or imprisonment. Please type or print clearly. Refer to instructions for additional information to complete this form.

	SRN: N6052	Section Number (if applicable):

1. Additional Information ID
AI-S-003(4)

Additional Information

2. Is This Information Confidential? ☐ Yes ☒ No

4. Does the source belong to one of the source categories that require quantificaiton of fugitive emissions? If so, identify the category on an AI-001 Form and include the fugitive emissions in the PTE Calculations for the Source.

Category: Yes. Secondary Metals Production Plants

PTE Calculations: See PTE Calculations provided on Form AI-S-003(5) submitted in response to S-003 5.

EGLE

RENEWABLE OPERATING PERMIT INITIAL APPLICATION
EU-001 PERMIT TO INSTALL (PTI) EXEMPT EMISSION UNITS

This information is required by Article II, Chapter 1, Part 55 (Air Pollution Control) of P.A. 451 of 1994, as amended, and the Federal Clean Air Act of 1990. Failure to obtain a permit required by Part 55 may result in penalties and/or imprisonment. Refer to "Renewable Operating Permit Initial Application Instructions" for additional information to complete the application.

SRN: N6052	Section Number (if applicable):

Review all emission units at the source and answer the question below.

1. Does the source have any emission units that are required to be listed in the ROP application under R 336.1212(4) (Rule 212(4)) of the Michigan Air Pollution Control Rules, not including Rules 281(2)(h), 287(2)(c), and 290?

☐ Yes ☒ No

If Yes, identify the emission units in the table below. If No, go to the EU-002 Form.

Note: Emission units that are subject to process specific emission limitations or standards, even if identified in Rule 212, must be captured in either an EU-002 or EU-004 Form. Identical emission units may be grouped (e.g. PTI exempt Storage Tanks).

Emission Unit ID	**Emission Unit Description**	**PTI Exemption Rule Citation** [e.g. Rule 282(2)(b)(i)]	**Rule 212(4) Citation** [e.g. Rule 212(4)(c)]
EU-PROPANE TANKS	Portable propane tanks used for refueling fork trucks	Rule 284(2)(b)	Rule 212(4)(d)
EU-CUTTING TORCHES	Portable torch cutting equipment used for maintenance activities.	Rule 285(2)(j)	Rule 212(4)(j)
EU-MAINTWASHER	Parts washer in maintenance area	Rule 281(2)(h)	Rule 212(4)(b)
EU-			
EU-			
EU-			
EU-			
EU-			
EU-			

Comments:

☐ Check if an AI-001 Form is attached to provide more information for EU-001. Enter AI-001 Form ID: **AI-**

EGLE

RENEWABLE OPERATING PERMIT INITIAL APPLICATION
EU-002 EMISSION UNITS MEETING THE CRITERIA OF RULES 281(2)(h), 285(2)(r)(iv), 287(2)(c), OR 290

This information is required by Article II, Chapter 1, Part 55 (Air Pollution Control) of P.A. 451 of 1994, as amended, and the Federal Clean Air Act of 1990. Failure to obtain a permit required by Part 55 may result in penalties and/or imprisonment. Refer to "Renewable Operating Permit Initial Application Instructions" for additional information to complete the application.

SRN: N6052	Section Number (if applicable):

Review all emission units and applicable requirements at the source and provide the following information.

1. Does the source have any emission units which meet the criteria of Rules 281(2)(h), 285(2)(r)(iv), 287(2)(c), or 290. ☐ Yes ☒ No

   If Yes, identify the emission units in the table below. If No, go to the EU-003 Form.

Note: If several emission units were installed under the same rule above, provide a description of each and an installation date for each.

Origin of Applicable Requirements	**Emission Unit Description – *Provide Emission Unit ID and a description of Process Equipment, Control Devices and Monitoring Devices***	**Date Emission Unit was Installed/ Modified/ Reconstructed**
☐ Rule 281(2)(h) or 285(2)(r)(iv) cleaning operation		
☐ Rule 287(2)(c) surface coating line		
☐ Rule 290 process with limited emissions		

Comments:

☐ Check if an AI-001 Form is attached to provide more information for EU-002. Enter AI-001 Form ID: **AI-**

Michigan Department of Environment, Great Lakes, and Energy - Air Quality Division

EGLE

RENEWABLE OPERATING PERMIT INITIAL APPLICATION
EU-003 EMISSION UNITS WITH PERMITS TO INSTALL

This information is required by Article II, Chapter 1, Part 55 (Air Pollution Control) of P.A. 451 of 1994, as amended, and the Federal Clean Air Act of 1990. Failure to obtain a permit required by Part 55 may result in penalties and/or imprisonment. Refer to "Renewable Operating Permit Initial Application Instructions" for additional information to complete the application.

SRN: N6052	Section Number (if applicable):

Review all emission units at the source and fill in the information in the following table for **all** emission units with Permits to Install (PTI). Any PTI(s) identified below must be attached to the application.

Permit to Install Number	Emission Unit ID	Description (*Include Process Equipment, Control Devices and Monitoring Devices*)	Date Emission Unit was Installed/ Modified/ Reconstructed
	EU-	See attached AI-EU-003(1) Form for all emission units listed in PTI.	
	EU-		
	EU-		
	EU-		
	EU-		
	EU-		
	EU-		
	EU-		
	EU-		

1. Are you proposing changes to any emission unit names, descriptions or control devices in the PTIs listed above? If Yes, describe the proposed changes on an AI-001 Form. ☒ Yes ☐ No

2. Are you proposing additions or clarifications to any permit conditions? If Yes, describe the proposed changes on an AI-001 Form. ☐ Yes ☒ No

3. Are you proposing monitoring, testing, recordkeeping and/or reporting necessary to demonstrate compliance with any applicable requirements? If Yes, describe the proposed conditions on an AI-001 Form. ☐ Yes ☒ No

☒ Check if an AI-001 Form is attached to provide more information for EU-003. Enter AI-001 Form ID: **AI-**EU-003(1),AI-EU-003(2)

EGLE

RENEWABLE OPERATING PERMIT APPLICATION
AI-001: ADDITIONAL INFORMATION

This information is required by Article II, Chapter 1, Part 55 (Air Pollution Control) of P.A. 451 of 1994, as amended, and the Federal Clean Air Act of 1990. Failure to obtain a permit required by Part 55 may result in penalties and/or imprisonment. Please type or print clearly. Refer to instructions for additional information to complete this form.

	SRN: N6052	Section Number (if applicable):

1. Additional Information ID
AI-EU-003(1)

Additional Information

2. Is This Information Confidential? ☐ Yes ☒ No

See attached list that is used to identify emission units with PTIs that must be incorporated into the ROP. Each Emission Unit is listed with their asscIated PTI Number, Emission Unit ID, Description and Date Installed.

In addition, any PTIs identified in the list are attached to AI-EU-003(1).

Attachment to EU-0003(1)

Permit to Install Number	Emission Unit ID	Description (Including Process Equipment, Control Devices and Monitoring devices)	Date Emission Unit was Installed/ Modified/ Reconstructed
186-16A	EUCHRGHAND	Charge Handling - The handling and storage of furnace charge material include internal returns (e.g. sprue, scrap), incoming scrap metal, alloy materials, inoculants, fluxes, etc.	11/19/2018
186-16A	EUEIF1	Electric Induction Furnace Melting - Electric Induction Furnace (EIF) to melt and process charge material. Design holding capacity 11 tons	11/19/2018
186-16A	EUEIF2	Electric Induction Furnace Melting - Electric Induction Furnace (EIF) to melt and process charge material. Design holding capacity 11 tons	11/19/2018
186-16A	EUEIF3	Electric Induction Furnace Melting - Electric Induction Furnace (EIF) to melt and process charge material. Design holding capacity 11 tons	11/19/2018
186-16A	EUEIF4	Electric Induction Furnace Melting - Electric Induction Furnace (EIF) to melt and process charge material. Design holding capacity 11 tons	11/19/2018
186-16A	EUDUCTINOC	Ductile Inoculation - An addition of magnesium based material to strengthen the metal when cast.	11/19/2018
186-16A	EUMLTXFER	Hot Metal Transfer - The transfer of hot metal in a ladle (transfer ladle) from the electric induction furnaces to the pouring operations.	11/19/2018
186-16A	EULMLPC	Large Mold Line Pouring and Cooling - The pouring and subsequent cooling of molten metal cast in a sand mold on the Large Mold Line. The mold and casting is subsequently transferred to the LML Shakeout.	04/01/2019
186-16A	EULMLSO	Large Mold Line Shakeout - The separation of mold and core sand from the casting. Sprue is subsequently transferred to Charge Handling, while mold and core sand is discharged to conveyors that are part of Sand Handling and Moldmaking.	04/01/2019
186-16A	EU1230PC	1230 Line Pouring and Cooling -The pouring and subsequent cooling of molten metal cast in a sand mold on the 1230 Line. The mold and casting is subsequently transferred to 1230 Line Shakeout.	11/19/2018
186-16A	EU1230SO	1230 Line Shakeout - The separation of mold and core sand from the casting. Sprue is subsequently transferred to Charge Handling, while mold and core sand is discharged to conveyors that are part of Sand Handling and Moldmaking.	11/19/2018
186-16A	EUSHMM	Sand Handling and Moldmaking - Includes Moldmaking and application of mold release.	11/19/2018

Attachment to EU-0003(1)

Permit to Install Number	Emission Unit ID	Description (Including Process Equipment, Control Devices and Monitoring devices)	Date Emission Unit was Installed/ Modified/ Reconstructed
186-16A	EUBLAST	Shotblasting - Enclosed process for the removal of excess sand and metal from casting surface.	11/19/2018
186-16A	EUGRIND	Grinding - Remove of unwanted metal at the mold parting lines and elsewhere.	11/19/2018
186-16A	EUDIPTANK	Asphaltic Dip Tank - The application of a low-VOC coating to finished castings.	11/19/2018
186-16A	EUPUNBCM	Phenolic Urethane No Bake (PUNB) Coremaking - After sand is heated to promote the reaction, a two-part resin system and a single liquid catalyst is mixed with the sand. After mixing the sand is distributed to the pattern. A release agent to promote core removal may be applied to the pattern prior to forming the core.	11/19/2018
186-16A	EUSHELLCM	Shell Coremaking - Resin coated sand is fed to a pattern that is preheated and coated with a release agent. Heat from the pattern cures the sand mix into the desired shape.	11/19/2018
186-16A	EUCOREWASH	Core Washing - The application of a VOC-containing refractory material (slurry) to the core. The core is subsequently ignited (i.e. lightoff) to dry and partially destroy the VOCs.	11/19/2018
186-16A	EUCORERELEASE	Core Release - The application on an "as needed basis" of a material to promote the release of the core from the pattern.	11/19/2018
186-16A	EULDLREPAIR	Ladle Repair - The removal and replacement of ladle refractory used to protect the ladle from the heat of the molten metal.	11/19/2018
186-16A	EUWASTESAND	Waste Sand Dust Handling - The removal and disposition of spent sand from the system.	11/19/2018
186-16A	EUMUAGEN	Makeup Air Units - Nine (9) natural-gas fired makeup air units with maximum rating of 10.4328 MMBtu/hr each. Two (2) natural-gas fired makeup air units with maximum rating of 7.8246 MMBtu/hr each.	11/19/2018
186-16A	EUHTRFDRYOFF	Foundry Office Heaters - Four (4) natural-gas fired units to provide heat to foundry offices with a maximum total rating of 0.600 MMBtu/hr.	11/19/2018
186-16A	EUHTRSUPPOFF	Support Office Heaters - Natural-gas fired units to provide heat to shipping office, maintenance office, grinding office, melt lab, scale office, mold office, CMM, control room, sand lab and (2) local bathroom with a maximum total rating of 0.700 MMBtu/hr.	11/19/2018
186-16A	EUHTROILBLD	Oil Building Heater - Natural-gas fired unit to provide heat to oil storage building with a maximum total rating of 0.350 MMBtu/hr.	11/19/2018

Attachment to EU-0003(1)

Permit to Install Number	Emission Unit ID	Description (Including Process Equipment, Control Devices and Monitoring devices)	Date Emission Unit was Installed/ Modified/ Reconstructed
186-16A	EUINFARED	Infrared heaters - Seven (7) infrared natural-gas heaters to provide heat to the building rated at 0.130 MMBtu/hr each.	11/19/2018
186-16A	EUBOILERS	Hot Water Boilers - Four (4) natural-gas hot water heaters total. Two (2) heaters rated at a maximum of 1.0 MMBtu/hr and two (2) heaters rated at a maximum of 0.096 MMBtu/hr. All to provide hot water to showers, restrooms, kitchen, etc.	11/19/2018
186-16A	EUFNCHEAT	Furnace Heaters - Four (4) natural-gas fired furnace heaters rated up to 2.0 MMBtu/hr to maintain environment when furnaces are not in use or as necessary.	11/19/2018
186-16A	EULDLHEAT	Ladle Preheaters - Three (3) natural-gas fired pedestal ladle heaters rated up to 1.5 MMBtu/hr each.	11/19/2018
186-16A	EULDLREPAIRHTR	Ladle Repair Torches - Eight (8) natural-gas fired ladle repair curing torches rated up to 2.0 MMBtu/hr each.	11/19/2018
186-16A	EUDUCTHTRS	Baghouse Duct Heaters - Five (5) natural-gas duct heaters for LML Mold Cooling, 1230 Mold Cooling, Sand Cooling, Hot Sand Screen, Cool Sand Screen rated at up to 0.50 MMBtu/hr each	11/19/2018
186-16A	EUDIPTANKHTR	Dip Tank Heater - One (1) natural-gas dip tank heater rated up to 0.140 MMBtu/hr to maintain coating at appropriate temperature.	11/19/2018
186-16A	EUDIPCUREOVEN	Dip Cure Oven - One (1) natural-gas dip curing oven heater rated up to 3.5 MMBtu/hr	11/19/2018
186-16A	EUPUNBBOILER	PUNB Core Sand Heater - One (1) natural-gas boiler to heat sand prior to mixing rated at 0.15 MMBtu/hr	11/19/2018
186-16A	EUSCALEPITBOILER	Scale Pit Boiler - One (1) natural-gas boiler to supply heat for scale pit rated at 0.096 MMBtu/hr.	11/19/2018
186-16A	EUSHELLHEATERS	Shell Core Heaters - Four (4) natural-gas heaters to heat shell core boxes. Two (2) rated at 1.0 MMBtu/hr and two (2) rated at 0.50 MMBtu/hr.	11/19/2018
186-16A	EUEG1	300 KW Natural Gas-Fired Emergency Generator - The emergency generator will be used to supply emergency power sufficient to remove any metal left in the furnaces should a power outage occur.	11/19/2018
186-16A	EUEG2	300 KW Natural Gas-Fired Emergency Generator - The emergency generator will be used to supply emergency power sufficient to remove any metal left in the furnaces should a power outage occur.	11/19/2018

Attachment to EU-0003(1)

Permit to Install Number	Emission Unit ID	Description (Including Process Equipment, Control Devices and Monitoring devices)	Date Emission Unit was Installed/ Modified/ Reconstructed
186-16A	EUROADS	Roadways and Parking Areas - Paved roads and parking areas used for receipt and shipping of goods as well as employee and visitor parking.	11/19/2018

MICHIGAN DEPARTMENT OF ENVIRONMENT, GREAT LAKES, AND ENERGY
AIR QUALITY DIVISION

June 18, 2019

PERMIT TO INSTALL
185-16A

ISSUED TO
East Jordan Foundry, LLC

LOCATED AT
2675 North U.S. 131
Elmira, Michigan

IN THE COUNTY OF
Antrim

STATE REGISTRATION NUMBER
N6052

The Air Quality Division has approved this Permit to Install, pursuant to the delegation of authority from the Michigan Department of Environment, Great Lakes, and Energy. This permit is hereby issued in accordance with and subject to Section 5505(1) of Article II, Chapter I, Part 55, Air Pollution Control, of the Natural Resources and Environmental Protection Act, 1994 PA 451, as amended. Pursuant to Air Pollution Control Rule 336.1201(1), this permit constitutes the permittee's authority to install the identified emission unit(s) in accordance with all administrative rules of the Department and the attached conditions. Operation of the emission unit(s) identified in this Permit to Install is allowed pursuant to Rule 336.1201(6).

DATE OF RECEIPT OF ALL INFORMATION REQUIRED BY RULE 203: **April 24, 2019**	
DATE PERMIT TO INSTALL APPROVED: **June 18, 2019**	SIGNATURE:
DATE PERMIT VOIDED:	SIGNATURE:
DATE PERMIT REVOKED:	SIGNATURE:

PERMIT TO INSTALL

Table of Contents

COMMON ACRONYMS 2
POLLUTANT / MEASUREMENT ABBREVIATIONS 3
GENERAL CONDITIONS 4
EMISSION UNIT SPECIAL CONDITIONS 6
EMISSION UNIT SUMMARY TABLE 6
EUCHRGHAND 10
EUDUCTINOC 12
EUMLTXFER 15
EUSHMM 17
EUBLAST 20
EUGRIND 22
EUDIPTANK 24
EUPUNBCM 26
EUSHELLCM 29
EULCLREPAIR 32
EUWASTESAND 34
FLEXIBLE GROUP SPECIAL CONDITIONS 36
FLEXIBLE GROUP SUMMARY TABLE 36
FGMELTING 38
FGPOURCOOL 41
FGSHAKEOUT 44
FGCORECHEM 47
FGNATGASUNITS 50
FGEG 52
FGMACTZZZZZ 57
FGFACILITY CONDITIONS 62
Appendix A 68

COMMON ACRONYMS

AQD	Air Quality Division
BACT	Best Available Control Technology
CAA	Clean Air Act
CAM	Compliance Assurance Monitoring
CEMS	Continuous Emission Monitoring System
CFR	Code of Federal Regulations
COMS	Continuous Opacity Monitoring System
Department/department/EGLE	Michigan Department of Environment, Great Lakes, and Energy
EU	Emission Unit
FG	Flexible Group
GACS	Gallons of Applied Coating Solids
GC	General Condition
GHGs	Greenhouse Gases
HVLP	High Volume Low Pressure*
ID	Identification
IRSL	Initial Risk Screening Level
ITSL	Initial Threshold Screening Level
LAER	Lowest Achievable Emission Rate
MACT	Maximum Achievable Control Technology
MAERS	Michigan Air Emissions Reporting System
MAP	Malfunction Abatement Plan
MSDS	Material Safety Data Sheet
NA	Not Applicable
NAAQS	National Ambient Air Quality Standards
NESHAP	National Emission Standard for Hazardous Air Pollutants
NSPS	New Source Performance Standards
NSR	New Source Review
PS	Performance Specification
PSD	Prevention of Significant Deterioration
PTE	Permanent Total Enclosure
PTI	Permit to Install
RACT	Reasonable Available Control Technology
ROP	Renewable Operating Permit
SC	Special Condition
SCR	Selective Catalytic Reduction
SNCR	Selective Non-Catalytic Reduction
SRN	State Registration Number
TBD	To Be Determined
TEQ	Toxicity Equivalence Quotient
USEPA/EPA	United States Environmental Protection Agency
VE	Visible Emissions

*For HVLP applicators, the pressure measured at the gun air cap shall not exceed 10 psig

POLLUTANT / MEASUREMENT ABBREVIATIONS

acfm	Actual cubic feet per minute
BTU	British Thermal Unit
°C	Degrees Celsius
CO	Carbon Monoxide
CO_2e	Carbon Dioxide Equivalent
dscf	Dry standard cubic foot
dscm	Dry standard cubic meter
°F	Degrees Fahrenheit
gr	Grains
HAP	Hazardous Air Pollutant
Hg	Mercury
hr	Hour
HP	Horsepower
H_2S	Hydrogen Sulfide
kW	Kilowatt
lb	Pound
m	Meter
mg	Milligram
mm	Millimeter
MM	Million
MW	Megawatts
NMOC	Non-Methane Organic Compounds
NO_x	Oxides of Nitrogen
ng	Nanogram
PM	Particulate Matter
PM10	Particulate Matter equal to or less than 10 microns in diameter
PM2.5	Particulate Matter equal to or less than 2.5 microns in diameter
pph	Pounds per hour
ppm	Parts per million
ppmv	Parts per million by volume
ppmw	Parts per million by weight
psia	Pounds per square inch absolute
psig	Pounds per square inch gauge
scf	Standard cubic feet
sec	Seconds
SO_2	Sulfur Dioxide
TAC	Toxic Air Contaminant
Temp	Temperature
THC	Total Hydrocarbons
tpy	Tons per year
µg	Microgram
µm	Micrometer or Micron
VOC	Volatile Organic Compounds
yr	Year

GENERAL CONDITIONS

1. The process or process equipment covered by this permit shall not be reconstructed, relocated, or modified, unless a Permit to Install authorizing such action is issued by the Department, except to the extent such action is exempt from the Permit to Install requirements by any applicable rule. **(R 336.1201(1))**

2. If the installation, construction, reconstruction, relocation, or modification of the equipment for which this permit has been approved has not commenced within 18 months, or has been interrupted for 18 months, this permit shall become void unless otherwise authorized by the Department. Furthermore, the permittee or the designated authorized agent shall notify the Department via the Supervisor, Permit Section, Air Quality Division, Michigan Department of Environment, Great Lakes, and Energy, P.O. Box 30260, Lansing, Michigan 48909-7760, if it is decided not to pursue the installation, construction, reconstruction, relocation, or modification of the equipment allowed by this Permit to Install. **(R 336.1201(4))**

3. If this Permit to Install is issued for a process or process equipment located at a stationary source that is not subject to the Renewable Operating Permit program requirements pursuant to Rule 210 (R 336.1210), operation of the process or process equipment is allowed by this permit if the equipment performs in accordance with the terms and conditions of this Permit to Install. **(R 336.1201(6)(b))**

4. The Department may, after notice and opportunity for a hearing, revoke this Permit to Install if evidence indicates the process or process equipment is not performing in accordance with the terms and conditions of this permit or is violating the Department's rules or the Clean Air Act. **(R 336.1201(8), Section 5510 of Act 451, PA 1994)**

5. The terms and conditions of this Permit to Install shall apply to any person or legal entity that now or hereafter owns or operates the process or process equipment at the location authorized by this Permit to Install. If the new owner or operator submits a written request to the Department pursuant to Rule 219 and the Department approves the request, this permit will be amended to reflect the change of ownership or operational control. The request must include all of the information required by subrules (1)(a), (b), and (c) of Rule 219 and shall be sent to the District Supervisor, Air Quality Division, Michigan Department of Environment, Great Lakes, and Energy. **(R 336.1219)**

6. Operation of this equipment shall not result in the emission of an air contaminant which causes injurious effects to human health or safety, animal life, plant life of significant economic value, or property, or which causes unreasonable interference with the comfortable enjoyment of life and property. **(R 336.1901)**

7. The permittee shall provide notice of an abnormal condition, start-up, shutdown, or malfunction that results in emissions of a hazardous or toxic air pollutant which continue for more than one hour in excess of any applicable standard or limitation, or emissions of any air contaminant continuing for more than two hours in excess of an applicable standard or limitation, as required in Rule 912, to the Department. The notice shall be provided not later than two business days after start-up, shutdown, or discovery of the abnormal condition or malfunction. Written reports, if required, must be filed with the Department within 10 days after the start-up or shutdown occurred, within 10 days after the abnormal conditions or malfunction has been corrected, or within 30 days of discovery of the abnormal condition or malfunction, whichever is first. The written reports shall include all of the information required in Rule 912(5). **(R 336.1912)**

8. Approval of this permit does not exempt the permittee from complying with any future applicable requirements which may be promulgated under Part 55 of 1994 PA 451, as amended or the Federal Clean Air Act.

9. Approval of this permit does not obviate the necessity of obtaining such permits or approvals from other units of government as required by law.

10. Operation of this equipment may be subject to other requirements of Part 55 of 1994 PA 451, as amended and the rules promulgated thereunder.

11. Except as provided in subrules (2) and (3) or unless the special conditions of the Permit to Install include an alternate opacity limit established pursuant to subrule (4) of Rule 301, the permittee shall not cause or permit to be discharged into the outer air from a process or process equipment a visible emission of density greater than the most stringent of the following. The grading of visible emissions shall be determined in accordance with Rule 303 (R 336.1303). **(R 336.1301)**
    a) A six-minute average of 20 percent opacity, except for one six-minute average per hour of not more than 27 percent opacity.
    b) A visible emission limit specified by an applicable federal new source performance standard.
    c) A visible emission limit specified as a condition of this Permit to Install.

12. Collected air contaminants shall be removed as necessary to maintain the equipment at the required operating efficiency. The collection and disposal of air contaminants shall be performed in a manner so as to minimize the introduction of contaminants to the outer air. Transport of collected air contaminants in Priority I and II areas requires the use of material handling methods specified in Rule 370(2). **(R 336.1370)**

13. The Department may require the permittee to conduct acceptable performance tests, at the permittee's expense, in accordance with Rule 1001 and Rule 1003, under any of the conditions listed in Rule 1001. **(R 336.2001)**

EMISSION UNIT SPECIAL CONDITIONS

EMISSION UNIT SUMMARY TABLE

The descriptions provided below are for informational purposes and do not constitute enforceable conditions.

Emission Unit ID	Emission Unit Description (Including Process Equipment & Control Device(s))	Flexible Group ID
EUCHRGHAND	Charge Handling - The handling and storage of furnace charge material include internal returns (e.g. sprue, scrap), incoming scrap metal, alloy materials, inoculants, fluxes, etc.	FGFACILITY FGMACTZZZZZ
EUEIF1	Electric Induction Furnace Melting - Electric Induction Furnace (EIF) to melt and process charge material. Design holding capacity 11 tons	FGMELTING FGFACILITY FGMACTZZZZZ
EUEIF2	Electric Induction Furnace Melting - Electric Induction Furnace (EIF) to melt and process charge material. Design holding capacity 11 tons	FGMELTING FGFACILITY FGMACTZZZZZ
EUEIF3	Electric Induction Furnace Melting - Electric Induction Furnace (EIF) to melt and process charge material. Design holding capacity 11 tons	FGMELTING FGFACILITY FGMACTZZZZZ
EUEIF4	Electric Induction Furnace Melting - Electric Induction Furnace (EIF) to melt and process charge material. Design holding capacity 11 tons	FGMELTING FGFACILITY FGMACTZZZZZ
EUDUCTINOC	Ductile Inoculation - An addition of magnesium based material to strengthen the metal when cast.	FGFACILITY FGMACTZZZZZ
EUMLTXFER	Hot Metal Transfer - The transfer of hot metal in a ladle (transfer ladle) from the electric induction furnaces to the pouring operations.	FGFACILITY FGMACTZZZZZ
EULMLPC	Large Mold Line Pouring and Cooling - The pouring and subsequent cooling of molten metal cast in a sand mold on the Large Mold Line. The mold and casting is subsequently transferred to the LML Shakeout.	FGPOURCOOL FGFACILITY FGMACTZZZZZ
EULMLSO	Large Mold Line Shakeout - The separation of mold and core sand from the casting. Sprue is subsequently transferred to Charge Handling, while mold and core sand is discharged to conveyors that are part of Sand Handling and Moldmaking.	FGSHAKEOUT FGFACILITY FGMACTZZZZZ
EU1230PC	1230 Line Pouring and Cooling -The pouring and subsequent cooling of molten metal cast in a sand mold on the 1230 Line. The mold and casting is subsequently transferred to 1230 Line Shakeout.	FGPOURCOOL FGFACILITY FGMACTZZZZZ

Emission Unit ID	Emission Unit Description (Including Process Equipment & Control Device(s))	Flexible Group ID
EU1230SO	1230 Line Shakeout - The separation of mold and core sand from the casting. Sprue is subsequently transferred to Charge Handling, while mold and core sand is discharged to conveyors that are part of Sand Handling and Moldmaking.	FGSHAKEOUT FGFACILITY FGMACTZZZZZ
EUSHMM	Sand Handling and Moldmaking – Includes mechanical sand reclamation, moldmaking and application of mold release.	FGFACILITY FGMACTZZZZZ
EUBLAST	Shotblasting - Enclosed process for the removal of excess sand and metal from casting surface.	FGFACILITY FGMACTZZZZZ
EUGRIND	Grinding - Remove of unwanted metal at the mold parting lines and elsewhere.	FGFACILITY FGMACTZZZZZ
EUDIPTANK	Asphaltic Dip Tank - The application of a low-VOC coating to finished castings.	FGFACILITY FGMACTZZZZZ
EUPUNBCM	Phenolic Urethane No Bake (PUNB) Coremaking - After sand is heated to promote the reaction, a two-part resin system and a single liquid catalyst is mixed with the sand. After mixing the sand is distributed to the pattern. A release agent to promote core removal may be applied to the pattern prior to forming the core.	FGFACILITY FGMACTZZZZZ
EUSHELLCM	Shell Coremaking - Resin coated sand is fed to a pattern that is preheated and coated with a release agent. Heat from the pattern cures the sand mix into the desired shape.	FGFACILITY FGMACTZZZZZ
EUCOREWASH	Core Washing - The application of a VOC-containing refractory material (slurry) to the core. The core is subsequently ignited (i.e. lightoff) to dry and partially destroy the VOCs.	FGCORECHEM FGFACILITY FGMACTZZZZZ
EUCORERELEASE	Core Release - The application on an "as needed basis" of a material to promote the release of the core from the pattern.	FGCORECHEM FGFACILITY FGMACTZZZZZ
EULDLREPAIR	Ladle Repair - The removal and replacement of ladle refractory used to protect the ladle from the heat of the molten metal.	FGFACILITY FGMACTZZZZZ
EUWASTESAND	Waste Sand Dust Handling - The removal and disposition of spent sand from the system.	FGFACILITY FGMACTZZZZZ
EUMUAGEN	Makeup Air Units - Nine (9) natural-gas fired makeup air units with maximum rating of 10.4328 MMBtu/hr each. Two (2) natural-gas fired makeup air units with maximum rating of 7.8246 MMBtu/hr each.	FGNATGASUNITS FGFACILITY FGMACTZZZZZ
EUHTRFDRYOFF	Foundry Office Heaters - Four (4) natural-gas fired units to provide heat to foundry offices with a maximum total rating of 0.600 MMBtu/hr.	FGNATGASUNITS FGFACILITY FGMACTZZZZZ
EUHTRSUPPOFF	Support Office Heaters - Natural-gas fired units to provide heat to shipping office, maintenance office, grinding office, melt lab, scale office, mold office, CMM, control room, sand lab and (2) local bathroom with a maximum total rating of 0.700 MMBtu/hr.	FGNATGASUNITS FGFACILITY FGMACTZZZZZ

Emission Unit ID	Emission Unit Description (Including Process Equipment & Control Device(s))	Flexible Group ID
EUHTROILBLD	Oil Building Heater - Natural-gas fired unit to provide heat to oil storage building with a maximum total rating of 0.350 MMBtu/hr.	FGNATGASUNITS FGFACILITY FGMACTZZZZZ
EUINFARED	Infrared heaters - Seven (7) infrared natural-gas heaters to provide heat to the building rated at 0.130 MMBtu/hr each.	FGNATGASUNITS FGFACILITY FGMACTZZZZZ
EUBOILERS	Hot Water Boilers - Four (4) natural-gas hot water heaters total. Two (2) heaters rated at a maximum of 1.0 MMBtu/hr and two (2) heaters rated at a maximum of 0.096 MMBtu/hr. All to provide hot water to showers, restrooms, kitchen, etc.	FGNATGASUNITS FGFACILITY FGMACTZZZZZ
EUFNCHEAT	Furnace Heaters - Four (4) natural-gas fired furnace heaters rated up to 2.0 MMBtu/hr to maintain environment when furnaces are not in use or as necessary.	FGNATGASUNITS FGFACILITY FGMACTZZZZZ
EULDLHEAT	Ladle Preheaters - Three (3) natural-gas fired pedestal ladle heaters rated up to 1.5 MMBtu/hr each.	FGNATGASUNITS FGFACILITY FGMACTZZZZZ
EULDLREPAIRHTR	Ladle Repair Torches - Eight (8) natural-gas fired ladle repair curing torches rated up to 2.0 MMBtu/hr each.	FGNATGASUNITS FGFACILITY FGMACTZZZZZ
EUDUCTHTRS	Baghouse Duct Heaters - Five (5) natural-gas duct heaters for LML Mold Cooling, 1230 Mold Cooling, Sand Cooling, Hot Sand Screen, Cool Sand Screen rated at up to 0.50 MMBtu/hr each	FGNATGASUNITS FGFACILITY FGMACTZZZZZ
EUDIPTANKHTR	Dip Tank Heater - One (1) natural-gas dip tank heater rated up to 0.140 MMBtu/hr to maintain coating at appropriate temperature.	FGNATGASUNITS FGFACILITY FGMACTZZZZZ
EUDIPCUREOVEN	Dip Cure Oven - One (1) natural-gas dip curing oven heater rated up to 3.5 MMBtu/hr	FGNATGASUNITS FGFACILITY FGMACTZZZZZ
EUPUNBBOILER	PUNB Core Sand Heater - One (1) natural-gas boiler to heat sand prior to mixing rated at 0.15 MMBtu/hr	FGNATGASUNITS FGFACILITY FGMACTZZZZZ
EUSCALEPITBOILER	Scale Pit Boiler - One (1) natural-gas boiler to supply heat for scale pit rated at 0.096 MMBtu/hr.	FGNATGASUNITS FGFACILITY FGMACTZZZZZ
EUSHELLHEATERS	Shell Core Heaters - Four (4) natural-gas heaters to heat shell core boxes. Two (2) rated at 1.0 MMBtu/hr and two (2) rated at 0.50 MMBtu/hr.	FGNATGASUNITS FGFACILITY FGMACTZZZZZ
EUEG1	300 KW Natural Gas-Fired Emergency Generator - The emergency generator will be used to supply emergency power sufficient to remove any metal left in the furnaces should a power outage occur.	FGEG FGFACILITY
EUEG2	300 KW Natural Gas-Fired Emergency Generator - The emergency generator will be used to supply emergency power sufficient to remove any metal left in the furnaces should a power outage occur.	FGEG FGFACILITY

Emission Unit ID	Emission Unit Description (Including Process Equipment & Control Device(s))	Flexible Group ID
EUROADS	Roadways and Parking Areas - Paved roads and parking areas used for receipt and shipping of goods as well as employee and visitor parking.	FGFACILITY

Changes to the equipment described in this table are subject to the requirements of R 336.1201, except as allowed by R 336.1278 to R 336.1291.

EUCHRGHAND
EMISSION UNIT CONDITIONS

DESCRIPTION

Handling and storage of furnace charge material includes internal returns (e.g. sprue, scrap), incoming scrap metal, alloy materials, inoculants, fluxes, etc.

Flexible Group ID: FGFACILITY, FGMACTZZZZZ

POLLUTION CONTROL EQUIPMENT

Received scrap metal and alloys will be processed indoors. Fabric filter collector (baghouse) control. Alloy addition, sprue return belt and the sprue crusher will be vented to Baghouses A B, E, H, J, and K then exhausted out stacks SVAB-BH, SVE-BH, SVHJ-BH, and SVK-BH.

I. EMISSION LIMIT(S)

Pollutant	Limit	Time Period / Operating Scenario	Equipment	Monitoring / Testing Method	Underlying Applicable Requirements
1. VE	10% opacity	Hourly	EUCHRGHAND Fugitives from enclosure	SC V.1	R 336.1301(1)(c) R 336.2810

[a]Stack particulate emission limits are established in FGFACILITY

II. MATERIAL LIMIT(S)

NA

III. PROCESS/OPERATIONAL RESTRICTION(S)

1. The permittee shall not operate EUCHRGHAND unless a malfunction abatement plan (MAP) as described in Rule 911(2), for operation of the baghouses, has been submitted and is implemented and maintained. The MAP shall, at a minimum, specify the following:
   a) A complete preventative maintenance program including identification of the supervisory personnel responsible for overseeing the inspection, maintenance, and repair of air-cleaning devices, a description of the items or conditions that shall be inspected, the frequency of the inspections or repairs, and an identification of the major replacement parts that shall be maintained in inventory for quick replacement.
   b) An identification of the source and air-cleaning device operating variables that shall be monitored to detect a malfunction or failure, the normal operating range of these variables, and a description of the method of monitoring or surveillance procedures.
   c) A description of the corrective procedures or operational changes that shall be taken in the event of a malfunction or failure to achieve compliance with the applicable emission limits.

   If at any time the MAP fails to address or inadequately addresses an event that meets the characteristics of a malfunction, the permittee shall amend the MAP within 45 days after such an event occurs. The permittee shall also amend the MAP within 45 days, if new equipment is installed or upon request from the District Supervisor. The permittee shall submit the MAP and any amendments to the MAP to the AQD District Supervisor for review and approval. If the AQD does not notify the permittee within 90 days of submittal, the MAP or amended MAP shall be considered approved. Until an amended plan is approved, the permittee shall implement corrective procedures or operational changes to achieve compliance with all applicable emission limits. **(R 336.1225, R 336.1331, R 336.1910, R 336.1911, R 336.2803, R 336.2804, R 336.2810)**

2. The permittee shall process and store furnace charge material in an enclosed building. **(R 336.1910, R 336.2803, R 336.2804, R 336.2810)**

IV. DESIGN/EQUIPMENT PARAMETER(S)

1. The permittee shall not operate EUCHRGHAND unless the fabric filter collector controlling emissions from the sprue return belt and sprue crusher is installed, maintained, and operated in accordance with the manufacturer's recommendations. **(R 336.1205, R 336.1224, R 336.1225, R 336.1331, R 336.1910, R 336.2803, R 336.2804, R 336.2810)**

2. The permittee shall not operate EUCHRGHAND unless a gauge, which measures the pressure drop across each fabric filter collector and sounds an alarm when the pressure drop exceeds 10 inches water, is installed, maintained and operated in a satisfactory manner. **(R 336.1224, R 336.1225, R 336.1331, R 336.1910, R 336.2803, R 336.2804, R 336.2810)**

V. TESTING/SAMPLING

Records shall be maintained on file for a period of five years. **(R 336.1201(3))**

1. The permittee shall verify every six months the visible emissions from EUCHRGHAND by conducting 1-hour visible emissions readings following the procedures specified in Federal Reference Test Method 9. Each visible emission reading shall be taken during routine operating conditions. Records of the Method 9 readings shall be made available to the District Supervisor upon request. **(R 336.1301, R 336.2810)**

VI. MONITORING/RECORDKEEPING

Records shall be maintained on file for a period of five years. **(R 336.1201(3))**

1. The permittee shall complete all required calculations/records in a format acceptable to the AQD District Supervisor and make them available by the last day of the calendar month, for the previous calendar month, unless otherwise specified in any monitoring/recordkeeping special condition. **(R 336.1205(1)(a)&(b), R 336.2803, R 336.2804, R 336.2810)**

2. The permittee shall monitor and record, in a satisfactory manner, the pressure drop across each baghouse for EUCHRGHAND on a once per operating shift basis. **(R 336.1224, R 336.1225, R 336.1301, R 336.1331, R 336.1910, R 336.2803, R 336.2804, R 336.2810)**

3. The permittee shall maintain records of all information necessary to demonstrate compliance with the visible emission limits. **(R 336.1301, R 336.2810)**

VII. REPORTING

NA

VIII. STACK/VENT RESTRICTION(S)

Stack parameter requirements are established in FGFACILITY

IX. OTHER REQUIREMENT(S)

NA

Footnotes:
[1] This condition is state only enforceable and was established pursuant to Rule 201(1)(b).

EUDUCTINOC
EMISSION UNIT CONDITIONS

DESCRIPTION

To provide strength an addition of a magnesium based material is placed into the ladle and then molten metal is poured from one of the furnaces into the ladle.

Flexible Group ID: FGFACILITY, FGMACTZZZZZ

POLLUTION CONTROL EQUIPMENT

Fabric filter collector (baghouse) control for EUDUCTINOC includes Baghouses A and B then vented to stack SVAB-BH.

I. EMISSION LIMIT(S)

Pollutant	Limit	Time Period / Operating Scenario	Equipment	Monitoring / Testing Method	Underlying Applicable Requirements
1. VE	10% opacity	Hourly	EUDUCTINOC Fugitives from enclosure	SC V.1	R 336.1301(1)(c), R 336.2810
2. VOC	0.28 pph	Hourly	EUDUCTINOC	GC 13	R 336.1702(a), R 336.2810
3. VOC	0.64 tpy	12-month rolling time period as determined at the end of each calendar month	EUDUCTINOC	SC VI.3	R 336.1702(a), R 336.2810

[a]Stack particulate emission limits are established in FGFACILITY

II. MATERIAL LIMIT(S)

NA

III. PROCESS/OPERATIONAL RESTRICTION(S)

1. The permittee shall not operate EUDUCTINOC unless a malfunction abatement plan (MAP) as described in Rule 911(2), for operation of the baghouses, has been submitted and is implemented and maintained. The MAP shall, at a minimum, specify the following:
   a) A complete preventative maintenance program including identification of the supervisory personnel responsible for overseeing the inspection, maintenance, and repair of air-cleaning devices, a description of the items or conditions that shall be inspected, the frequency of the inspections or repairs, and an identification of the major replacement parts that shall be maintained in inventory for quick replacement.
   b) An identification of the source and air-cleaning device operating variables that shall be monitored to detect a malfunction or failure, the normal operating range of these variables, and a description of the method of monitoring or surveillance procedures.
   c) A description of the corrective procedures or operational changes that shall be taken in the event of a malfunction or failure to achieve compliance with the applicable emission limits.

If at any time the MAP fails to address or inadequately addresses an event that meets the characteristics of a malfunction, the permittee shall amend the MAP within 45 days after such an event occurs. The permittee shall also amend the MAP within 45 days, if new equipment is installed or upon request from the District Supervisor. The permittee shall submit the MAP and any amendments to the MAP to the AQD District Supervisor for review and approval. If the AQD does not notify the permittee within 90 days of submittal, the MAP or amended MAP shall be considered approved. Until an amended plan is approved, the permittee shall implement corrective procedures or operational changes to achieve compliance with all applicable emission limits. **(R 336.1225, R 336.1331, R 336.1910, R 336.1911, R 336.2803, R 336.2804, R 336.2810)**

IV. DESIGN/EQUIPMENT PARAMETER(S)

1. The permittee shall not operate EUDUCTINOC unless the fabric filter collectors are installed, maintained, and operated in accordance with the manufacturer's recommendations. **(R 336.1205, R 336.1224, R 336.1225, R 336.1331, R 336.1910, R 336.2803, R 336.2804, R 336.2810)**

2. The permittee shall not operate EUDUCTINOC unless a gauge, which measures the pressure drop across each fabric filter collector and sounds an alarm when the pressure drop exceeds 10 inches water, is installed, maintained and operated in a satisfactory manner. **(R 336.1224, R 336.1225, R 336.1301, R 336.1331, R 336.1910, R 336.2802)**

V. TESTING/SAMPLING

Records shall be maintained on file for a period of five years. **(R 336.1201(3))**

1. The permittee shall verify every six months the visible emissions from EUDUCTINOC stack SVAB-BH by conducting 1-hour visible emissions readings following the procedures specified in Federal Reference Test Method 9. Each visible emission reading shall be taken during routine operating conditions. Records of the Method 9 readings shall be made available to the District Supervisor upon request. **(R 336.1205, R 336.1702)**

2. The permittee shall perform and record the results of a non-certified visible emission check on all of the emission points from EUDUCTINOC at least once per calendar day during routine operating conditions. The visible emission check shall simply verify the presence of visible emissions and need not follow the procedures specified in Federal Reference Test Method 9. Therefore, multiple stacks may be observed simultaneously. Each visible emission check shall be taken during routine operating conditions and be a minimum of 6 minutes. If visible emissions are observed, the permittee shall immediately initiate corrective actions and document the corrective actions taken. **(R 336.1201(3))**

VI. MONITORING/RECORDKEEPING

Records shall be maintained on file for a period of five years. **(R 336.1201(3))**

1. The permittee shall complete all required calculations/records in a format acceptable to the AQD District Supervisor and make them available by the last day of the calendar month, for the previous calendar month, unless otherwise specified in any monitoring/recordkeeping special condition. **(R 336.1205(1)(a)&(b), R 336.2803, R 336.2804)**

2. The permittee shall monitor and record, in a satisfactory manner, the pressure drop across each baghouse for EUDUCTINOC on a once per operating shift basis. **(R 336.1224, R 336.1225, R 336.1301, R 336.1331, R 336.1910)**

3. The permittee shall calculate and record, in a satisfactory manner, the VOC emissions in tons for EUDUCTINOC on a monthly, and 12-month rolling time period basis using emission factors approved by the AQD District Supervisor. The permittee shall keep all records on file at the facility and make them available to the Department upon request. **(R 336.1205(1)(a)&(b), R 336.1702, R 336.2810)**

VII. REPORTING

NA

VIII. STACK/VENT RESTRICTION(S)

Stack parameter requirements are established in FGFACILITY

IX. OTHER REQUIREMENT(S)

NA

Footnotes:
[1] This condition is state only enforceable and was established pursuant to Rule 201(1)(b).

EUMLTXFER
EMISSION UNIT CONDITIONS

DESCRIPTION

The transfer of hot metal in a ladle (transfer ladle) from the electric induction furnaces to the pouring operations.

Flexible Group ID: FGFACILITY, FGMACTZZZZZ

POLLUTION CONTROL EQUIPMENT

Fabric filter collector (baghouse) control. Incidental capture of emissions occurs during the transfer of metal to and from the metal transfer ladles by Baghouses A and B then exhausted out stack SVAB-BH.

I. EMISSION LIMIT(S)

Pollutant	Limit	Time Period / Operating Scenario	Equipment	Monitoring / Testing Method	Underlying Applicable Requirements
1. VE	10 % opacity	Hourly	EUMLTXFER Fugitives from enclosure	SC V.1	R336.1301(1)(c)

[a]Stack particulate emission limits are established in FGFACILITY

II. MATERIAL LIMIT(S)

NA

III. PROCESS/OPERATIONAL RESTRICTION(S)

1. The permittee shall not operate EUMLTXFER unless a malfunction abatement plan (MAP) as described in Rule 911(2), for operation of the baghouses, has been submitted and is implemented and maintained. The MAP shall, at a minimum, specify the following:
   a) A complete preventative maintenance program including identification of the supervisory personnel responsible for overseeing the inspection, maintenance, and repair of air-cleaning devices, a description of the items or conditions that shall be inspected, the frequency of the inspections or repairs, and an identification of the major replacement parts that shall be maintained in inventory for quick replacement.
   b) An identification of the source and air-cleaning device operating variables that shall be monitored to detect a malfunction or failure, the normal operating range of these variables, and a description of the method of monitoring or surveillance procedures.
   c) A description of the corrective procedures or operational changes that shall be taken in the event of a malfunction or failure to achieve compliance with the applicable emission limits.

   If at any time the MAP fails to address or inadequately addresses an event that meets the characteristics of a malfunction, the permittee shall amend the MAP within 45 days after such an event occurs. The permittee shall also amend the MAP within 45 days, if new equipment is installed or upon request from the District Supervisor. The permittee shall submit the MAP and any amendments to the MAP to the AQD District Supervisor for review and approval. If the AQD does not notify the permittee within 90 days of submittal, the MAP or amended MAP shall be considered approved. Until an amended plan is approved, the permittee shall implement corrective procedures or operational changes to achieve compliance with all applicable emission limits. **(R 336.1225, R 336.1331, R 336.1910, R 336.1911, R 336.2803, R 336.2804)**

IV. DESIGN/EQUIPMENT PARAMETER(S)

1. The permittee shall not operate EUMLTXFER unless the fabric filter collectors are installed, maintained, and operated in accordance with the manufacturer's recommendations. **(R 336.1205, R 336.1224, R 336.1225, R 336.1331, R 336.1910)**

2. The permittee shall not operate EUMLTXFER unless a gauge, which measures the pressure drop across each fabric filter collector and sounds an alarm when the pressure drop exceeds 10 inches water, is installed, maintained and operated in a satisfactory manner. **(R 336.1224, R 336.1225, R 336.1301, R 336.1331, R 336.1910, R 336.2802)**

V. TESTING/SAMPLING

Records shall be maintained on file for a period of five years. **(R 336.1201(3))**

1. The permittee shall verify every six months the visible emissions from stack SVAB-BH by conducting 1-hour visible emissions readings following the procedures specified in Federal Reference Test Method 9. Each visible emission reading shall be taken during routine operating conditions. Records of the Method 9 readings shall be made available to the District Supervisor upon request. **(R 336.1205, R 336.1702)**

2. The permittee shall perform and record the results of a non-certified visible emission check on all of the emission points from EUMLTXFER at least once per calendar day during routine operating conditions. The visible emission check shall simply verify the presence of visible emissions and need not follow the procedures specified in Federal Reference Test Method 9. Therefore, multiple stacks may be observed simultaneously. Each visible emission check shall be taken during routine operating conditions and be a minimum of 6 minutes. If visible emissions are observed, the permittee shall immediately initiate corrective actions and document the corrective actions taken. **(R 336.1201(3))**

VI. MONITORING/RECORDKEEPING

Records shall be maintained on file for a period of five years. **(R 336.1201(3))**

1. The permittee shall complete all required calculations/records in a format acceptable to the AQD District Supervisor and make them available by the last day of the calendar month, for the previous calendar month, unless otherwise specified in any monitoring/recordkeeping special condition. **(R 336.1205(1)(a)&(b), R 336.2803, R 336.2804)**

2. The permittee shall monitor and record, in a satisfactory manner, the pressure drop across each baghouse for EUMLTXFER on a once per operating shift basis. **(R 336.1224, R 336.1225, R 336.1301, R 336.1331, R 336.1910)**

3. The permittee shall maintain records of all information necessary to demonstrate compliance with the visible emission limits. **(R 336.1205(1)(a)&(b), R 336.1225, R 336.1331(1)(c))**

VII. REPORTING

NA

VIII. STACK/VENT RESTRICTION(S)

Stack parameter requirements are established in FGFACILITY

IX. OTHER REQUIREMENT(S)

NA

Footnotes:
[1] This condition is state only enforceable and was established pursuant to Rule 201(1)(b).

EUSHMM
EMISSION UNIT CONDITIONS

DESCRIPTION

Sand Handling and Moldmaking – Includes mechanical sand reclamation, moldmaking and application of mold release.
Flexible Group ID: FGFACILITY, FGMACTZZZZZ

POLLUTION CONTROL EQUIPMENT

Fabric filter collector (baghouse) control for EUSHMM includes portions Baghouses A, B, E, F, and G then vented to stacks SVAB-BH, SVE-BH, SVF-BH, and SVG-BH.

I. EMISSION LIMIT(S)

Pollutant	Limit	Time Period / Operating Scenario	Equipment	Monitoring / Testing Method	Underlying Applicable Requirements
1. VE	10% opacity	Hourly	EUSHMM Fugitives from enclosure	SC V.1	R 336.1301(1)(c)

[a]Stack particulate emission limits are established in FGFACILITY

II. MATERIAL LIMIT(S)

Material	Limit	Time Period / Operating Scenario	Equipment	Testing / Monitoring Method	Underlying Applicable Requirements
1. Sand Processed	1,920,000 tons/year	12-month rolling time period as determined at the end of each calendar month	EUSHMM	SC VI.4	R 336.1225 R 336.1205 R 336.2803, R 336.2804, R 336.2810

III. PROCESS/OPERATIONAL RESTRICTION(S)

1. The permittee shall not operate EUSHMM unless a malfunction abatement plan (MAP) as described in Rule 911(2), for operation of the baghouses, has been submitted and is implemented and maintained. The MAP shall, at a minimum, specify the following:
   a) A complete preventative maintenance program including identification of the supervisory personnel responsible for overseeing the inspection, maintenance, and repair of air-cleaning devices, a description of the items or conditions that shall be inspected, the frequency of the inspections or repairs, and an identification of the major replacement parts that shall be maintained in inventory for quick replacement.
   b) An identification of the source and air-cleaning device operating variables that shall be monitored to detect a malfunction or failure, the normal operating range of these variables, and a description of the method of monitoring or surveillance procedures.
   c) A description of the corrective procedures or operational changes that shall be taken in the event of a malfunction or failure to achieve compliance with the applicable emission limits.

If at any time the MAP fails to address or inadequately addresses an event that meets the characteristics of a malfunction, the permittee shall amend the MAP within 45 days after such an event occurs. The permittee shall also amend the MAP within 45 days, if new equipment is installed or upon request from the District Supervisor. The permittee shall submit the MAP and any amendments to the MAP to the AQD District Supervisor for review and approval. If the AQD does not notify the permittee within 90 days of submittal, the MAP or amended MAP shall be considered approved. Until an amended plan is approved, the permittee shall implement corrective procedures or operational changes to achieve compliance with all applicable emission limits. **(R 336.1225, R 336.1331, R 336.1910, R 336.1911, R 336.2803, R 336.2804)**

IV. DESIGN/EQUIPMENT PARAMETER(S)

1. The permittee shall not operate EUSHMM unless the fabric filter collectors are installed, maintained, and operated in accordance with the manufacturer's recommendations. **(R 336.1205, R 336.1224, R 336.1225, R 336.1331, R 336.1910)**

2. The permittee shall not operate EUSHMM unless a gauge, which measures the pressure drop across each fabric filter collector and sounds an alarm when the pressure drop exceeds 10 inches water, is installed, maintained and operated in a satisfactory manner. **(R 336.1224, R 336.1225, R 336.1301, R 336.1331, R 336.1910, R 336.2802)**

V. TESTING/SAMPLING

Records shall be maintained on file for a period of five years. **(R 336.1201(3))**

1. The permittee shall verify every six months the visible emissions from EUSHMM baghouse stacks by conducting 1-hour visible emissions readings following the procedures specified in Federal Reference Test Method 9. Each visible emission reading shall be taken during routine operating conditions. Records of the Method 9 readings shall be made available to the District Supervisor upon request. **(R 336.1205)**

2. The permittee shall perform and record the results of a non-certified visible emission check on all of the emission points from EUSHMM at least once per calendar day during routine operating conditions. The visible emission check shall simply verify the presence of visible emissions and need not follow the procedures specified in Federal Reference Test Method 9. Therefore, multiple stacks may be observed simultaneously. Each visible emission check shall be taken during routine operating conditions and be a minimum of 6 minutes. If visible emissions are observed, the permittee shall immediately initiate corrective actions and document the corrective actions taken. **(R 336.1201(3))**

VI. MONITORING/RECORDKEEPING

Records shall be maintained on file for a period of five years. **(R 336.1201(3))**

1. The permittee shall complete all required calculations/records in a format acceptable to the AQD District Supervisor and make them available by the last day of the calendar month, for the previous calendar month, unless otherwise specified in any monitoring/recordkeeping special condition. **(R 336.1205(1)(a)&(b), R 336.2803, R 336.2804)**

2. The permittee shall monitor and record, in a satisfactory manner, the pressure drop across each baghouse for EUSHMM on a once per operating shift basis. **(R 336.1224, R 336.1225, R 336.1301, R 336.1331, R 336.1910)**

3. The permittee shall monitor and record, in a satisfactory manner, the tons of sand processed on a monthly, and 12-month rolling time period basis. The permittee shall keep all records on file at the facility and make them available to the Department upon request. **(R 336.1205(1)(a)&(b), R 336.1225, R 336.2803, R 336.2804, R 336.2810)**

4. The permittee shall maintain records of all information necessary to demonstrate compliance with the visible emission limits. **(R 336.1205(1)(a)&(b), R 336.1225, R 336.1331(1)(c))**

VII. REPORTING

NA

VIII. STACK/VENT RESTRICTION(S)

Stack parameter requirements are established in FGFACILITY

IX. OTHER REQUIREMENT(S)

NA

Footnotes:
[1] This condition is state only enforceable and was established pursuant to Rule 201(1)(b).

EUBLAST
EMISSION UNIT CONDITIONS

DESCRIPTION

Enclosed process for the removal of excess sand and metal from casting surface.

Flexible Group ID: FGFACILITY, FGMACTZZZZZ

POLLUTION CONTROL EQUIPMENT

Fabric filter collector (baghouse) control for EUBLAST includes Baghouses H and J then vented to stack SVHJ-BH.

I. EMISSION LIMIT(S)

	Pollutant	Limit	Time Period / Operating Scenario	Equipment	Monitoring / Testing Method	Underlying Applicable Requirements
1.	VE	10% opacity	Hourly	EUBLAST	SC V.1	R 336.1301(1)(c)

[a]Stack particulate emission limits are established in FGFACILITY

II. MATERIAL LIMIT(S)

NA

III. PROCESS/OPERATIONAL RESTRICTION(S)

1. The permittee shall not operate EUBLAST unless a malfunction abatement plan (MAP) as described in Rule 911(2), for operation of the baghouses, has been submitted and is implemented and maintained. The MAP shall, at a minimum, specify the following:
   a) A complete preventative maintenance program including identification of the supervisory personnel responsible for overseeing the inspection, maintenance, and repair of air-cleaning devices, a description of the items or conditions that shall be inspected, the frequency of the inspections or repairs, and an identification of the major replacement parts that shall be maintained in inventory for quick replacement.
   b) An identification of the source and air-cleaning device operating variables that shall be monitored to detect a malfunction or failure, the normal operating range of these variables, and a description of the method of monitoring or surveillance procedures.
   c) A description of the corrective procedures or operational changes that shall be taken in the event of a malfunction or failure to achieve compliance with the applicable emission limits.

   If at any time the MAP fails to address or inadequately addresses an event that meets the characteristics of a malfunction, the permittee shall amend the MAP within 45 days after such an event occurs. The permittee shall also amend the MAP within 45 days, if new equipment is installed or upon request from the District Supervisor. The permittee shall submit the MAP and any amendments to the MAP to the AQD District Supervisor for review and approval. If the AQD does not notify the permittee within 90 days of submittal, the MAP or amended MAP shall be considered approved. Until an amended plan is approved, the permittee shall implement corrective procedures or operational changes to achieve compliance with all applicable emission limits. **(R 336.1225, R 336.1331, R 336.1910, R 336.1911, R 336.2803, R 336.2804)**

IV. DESIGN/EQUIPMENT PARAMETER(S)

1. The permittee shall not operate EUBLAST unless the fabric filter collectors are installed, maintained, and operated in accordance with the manufacturer's recommendations. **(R 336.1205, R 336.1224, R 336.1225, R 336.1331, R 336.1910)**

2. The permittee shall not operate EUBLAST unless a gauge, which measures the pressure drop across each fabric filter collector and sounds an alarm when the pressure drop exceeds 10 inches water, is installed, maintained and operated in a satisfactory manner. **(R 336.1224, R 336.1225, R 336.1301, R 336.1331, R 336.1910, R 336.2802)**

V. TESTING/SAMPLING

Records shall be maintained on file for a period of five years. **(R 336.1201(3))**

1. The permittee shall verify every six months the visible emissions from stack SVHJ-BH by conducting 1-hour visible emissions readings following the procedures specified in Federal Reference Test Method 9. Each visible emission reading shall be taken during routine operating conditions. Records of the Method 9 readings shall be made available to the District Supervisor upon request. **(R 336.1205, R 336.1702)**

2. The permittee shall perform and record the results of a non-certified visible emission check on all of the emission points from EUBLAST at least once per calendar day during routine operating conditions. The visible emission check shall simply verify the presence of visible emissions and need not follow the procedures specified in Federal Reference Test Method 9. Therefore, multiple stacks may be observed simultaneously. Each visible emission check shall be taken during routine operating conditions and be a minimum of 6 minutes. If visible emissions are observed, the permittee shall immediately initiate corrective actions and document the corrective actions taken. **(R 336.1201(3))**

VI. MONITORING/RECORDKEEPING

Records shall be maintained on file for a period of five years. **(R 336.1201(3))**

1. The permittee shall complete all required calculations/records in a format acceptable to the AQD District Supervisor and make them available by the last day of the calendar month, for the previous calendar month, unless otherwise specified in any monitoring/recordkeeping special condition. **(R 336.1205(1)(a)&(b), R 336.2803, R 336.2804)**

2. The permittee shall monitor and record, in a satisfactory manner, the pressure drop across each baghouse for EUBLAST on a once per operating shift basis. **(R 336.1224, R 336.1225, R 336.1301, R 336.1331, R 336.1910)**

3. The permittee shall maintain records of all information necessary to demonstrate compliance with the visible emission limits. **(R 336.1205(1)(a)&(b), R 336.1225, R 336.1331(1)(c))**

VII. REPORTING

NA

VIII. STACK/VENT RESTRICTION(S)

Stack parameter requirements are established in FGFACILITY

IX. OTHER REQUIREMENT(S)

NA

Footnotes:
[1] This condition is state only enforceable and was established pursuant to Rule 201(1)(b).

EUGRIND
EMISSION UNIT CONDITIONS

DESCRIPTION

Grinding – Removal of unwanted metal at the mold parting lines and elsewhere.

Flexible Group ID: FGFACILITY, FGMACTZZZZZ

POLLUTION CONTROL EQUIPMENT

Fabric filter collector (baghouse) control for EUGRIND includes Baghouses H and J then vented to stack SVHJ-BH.

I. EMISSION LIMIT(S)

	Pollutant	Limit	Time Period / Operating Scenario	Equipment	Monitoring / Testing Method	Underlying Applicable Requirements
1.	VE	10% opacity	Hourly	EUGRIND	SC V.1	R 336.1301(1)(c)

[a]Stack particulate emission limits are established in FGFACILITY

II. MATERIAL LIMIT(S)

NA

III. PROCESS/OPERATIONAL RESTRICTION(S)

1. The permittee shall not operate EUGRIND unless a malfunction abatement plan (MAP) as described in Rule 911(2), for operation of the baghouses, has been submitted and is implemented and maintained. The MAP shall, at a minimum, specify the following:
   a) A complete preventative maintenance program including identification of the supervisory personnel responsible for overseeing the inspection, maintenance, and repair of air-cleaning devices, a description of the items or conditions that shall be inspected, the frequency of the inspections or repairs, and an identification of the major replacement parts that shall be maintained in inventory for quick replacement.
   b) An identification of the source and air-cleaning device operating variables that shall be monitored to detect a malfunction or failure, the normal operating range of these variables, and a description of the method of monitoring or surveillance procedures.
   c) A description of the corrective procedures or operational changes that shall be taken in the event of a malfunction or failure to achieve compliance with the applicable emission limits.

   If at any time the MAP fails to address or inadequately addresses an event that meets the characteristics of a malfunction, the permittee shall amend the MAP within 45 days after such an event occurs. The permittee shall also amend the MAP within 45 days, if new equipment is installed or upon request from the District Supervisor. The permittee shall submit the MAP and any amendments to the MAP to the AQD District Supervisor for review and approval. If the AQD does not notify the permittee within 90 days of submittal, the MAP or amended MAP shall be considered approved. Until an amended plan is approved, the permittee shall implement corrective procedures or operational changes to achieve compliance with all applicable emission limits. **(R 336.1225, R 336.1331, R 336.1910, R 336.1911, R 336.2803, R 336.2804)**

IV. DESIGN/EQUIPMENT PARAMETER(S)

1. The permittee shall not operate EUGRIND unless the fabric filter collectors are installed, maintained, and operated in accordance with the manufacturer's recommendations. **(R 336.1205, R 336.1224, R 336.1225, R 336.1331, R 336.1910)**

2. The permittee shall not operate EUGRIND unless a gauge, which measures the pressure drop across each fabric filter collector and sounds an alarm when the pressure drop exceeds 10 inches water, is installed, maintained and operated in a satisfactory manner. **(R 336.1224, R 336.1225, R 336.1301, R 336.1331, R 336.1910, R 336.2802)**

V. TESTING/SAMPLING

Records shall be maintained on file for a period of five years. **(R 336.1201(3))**

1. The permittee shall verify every six months the visible emissions from stack SVHJ-BH by conducting 1-hour visible emissions readings following the procedures specified in Federal Reference Test Method 9. Each visible emission reading shall be taken during routine operating conditions. Records of the Method 9 readings shall be made available to the District Supervisor upon request. **(R 336.1205, R 336.1702)**

2. The permittee shall perform and record the results of a non-certified visible emission check on all of the emission points from EUGRIND at least once per calendar day during routine operating conditions. The visible emission check shall simply verify the presence of visible emissions and need not follow the procedures specified in Federal Reference Test Method 9. Therefore, multiple stacks may be observed simultaneously. Each visible emission check shall be taken during routine operating conditions and be a minimum of 6 minutes. If visible emissions are observed, the permittee shall immediately initiate corrective actions and document the corrective actions taken. **(R 336.1201(3))**

VI. MONITORING/RECORDKEEPING

Records shall be maintained on file for a period of five years. **(R 336.1201(3))**

1. The permittee shall complete all required calculations/records in a format acceptable to the AQD District Supervisor and make them available by the last day of the calendar month, for the previous calendar month, unless otherwise specified in any monitoring/recordkeeping special condition. **(R 336.1205(1)(a)&(b), R 336.2803, R 336.2804)**

2. The permittee shall monitor and record, in a satisfactory manner, the pressure drop across each baghouse for EUGRIND on a once per operating shift basis. **(R 336.1224, R 336.1225, R 336.1301, R 336.1331, R 336.1910)**

3. The permittee shall maintain records of all information necessary to demonstrate compliance with the visible emission limits. **(R 336.1205(1)(a)&(b), R 336.1225, R 336.1331(1)(c))**

VII. REPORTING

NA

VIII. STACK/VENT RESTRICTION(S)

Stack parameter requirements are established in FGFACILITY

IX. OTHER REQUIREMENT(S)

NA

Footnotes:
[1] This condition is state only enforceable and was established pursuant to Rule 201(1)(b).

EUDIPTANK
EMISSION UNIT CONDITIONS

DESCRIPTION

A dip coat coating line to coat special iron castings that applies a low-VOC coating to finished castings.

Flexible Group ID: FGFACILITY, FGMACTZZZZZ

POLLUTION CONTROL EQUIPMENT

NA

I. EMISSION LIMIT(S)

Pollutant	Limit	Time Period / Operating Scenario	Equipment	Monitoring / Testing Method	Underlying Applicable Requirements
1. VOC	15.2 tpy	12-month rolling time period as determined at the end of each calendar month	EUDIPTANK	SC VI.2	R 336.1702(a), R 336.2810

II. MATERIAL LIMIT(S)

Material	Limit	Time Period / Operating Scenario	Equipment	Monitoring / Testing Method	Underlying Applicable Requirements
1. VOC	0.60 pounds per gallon of coating, minus water, as applied	Calendar day average	EUDIPTANK	SC V.1	R 336.1702(a) R 336.1205 R 336.2810

III. PROCESS/OPERATIONAL RESTRICTION(S)

1. The dip tank shall not be operated at temperatures greater than 160°F. **(R 336.1224, R 336.1225, R 336.1702(a), R 336.2810)**

IV. DESIGN/EQUIPMENT PARAMETER(S)

1. The permittee shall not operate EUDIPTANK unless a device to measure the temperature of the coating material in the tank is installed, maintained, and operated in accordance with the manufacturer's recommendations. **(R 336.1205, R 336.1224, R 336.1225, R 336.1702, R 336.2810)**

V. TESTING/SAMPLING

Records shall be maintained on file for a period of five years. **(R 336.1201(3))**

Once every five years, the permittee shall determine the VOC content, water content and density of any dip coating material used in EUDIPTANK, as received and as applied, using federal Reference Test Method 24. Upon prior written approval by the AQD District Supervisor, the permittee may determine the VOC content from manufacturer's formulation data. If the Method 24 and the formulation values should differ, the permittee shall use the Method 24 results to determine compliance. **(R 336.1225, R 336.1702(a), R 336.2001, R 336.2003, R 336.2004, R 336.2810)**

VI. MONITORING/RECORDKEEPING

Records shall be maintained on file for a period of five years. **(R 336.1201(3))**

1. The permittee shall record once daily, the temperature of the material in the dip tank while operating. **(R 336.1205, R 336.1224, R 336.1225, R 336.1702, R 336.2810)**

2. The permittee shall keep a separate record of the following for EUDIPTANK:
   a) The type of each material used. This includes but is not limited to coating material, wash or cleaning solvents, makeup solvents, purge and clean-up solvents.
   b) Chemical composition of each material, including weight percent of each component.
   c) The VOC content of each material, with and without water and exempt solvents, (in percent by weight or pounds per gallon), as received and as applied.
   d) The usage rate (in pounds or gallons) of each material as applied (daily).
   e) The actual hours of operation each day.
   f) VOC emission calculations determining the monthly emission rate and the annual emission rate in tons per 12-month rolling time period as determined at the end of each calendar month.

The permittee shall keep the records on file at the facility, in a format acceptable to the AQD District Supervisor, and make them available to the Department upon request. **(R 336.1225, R 336.1702(a), R 336.2810)**

VII. REPORTING

NA

VIII. STACK/VENT RESTRICTION(S)

1. The permittee shall not discharge the emissions from EUDIPTANK directly into the atmosphere. **(R 336.1205(3), R 336.1225, R 336.2803, R 336.2804)**

IX. OTHER REQUIREMENT(S)

NA

Footnotes:
[1] This condition is state only enforceable and was established pursuant to Rule 201(1)(b).

EUPUNBCM
EMISSION UNIT CONDITIONS

DESCRIPTION

Phenolic Urethane No Bake (PUNB) Coremaking - After sand is heated to promote the reaction, a two-part resin and a single liquid catalyst system is mixed with the sand. After mixing the sand is distributed to the pattern. A release agent to promote core removal may be applied to the pattern prior to forming the core.

Flexible Group ID: FGFACILITY, FGMACTZZZZZ

POLLUTION CONTROL EQUIPMENT

Fabric filter collector (baghouse) control. Baghouse L

I. EMISSION LIMIT(S)

Pollutant	Limit	Time Period / Operating Scenario	Equipment	Monitoring / Testing Method	Underlying Applicable Requirements
1. VOC	14.47 pph	Hour	EUPUNBCM	SC VI.3	R 336.1702(a) R 336.2810
2. VOC	1.70 tpy	12-month rolling time period as determined at the end of each calendar month	EUPUNBCM	SC VI.3	R 336.1702(a) R 336.2810
3. VE	10% opacity	Hourly	EUPUNBCM	SC V.2	R 336.1301(1)(c)

[a]Stack particulate emission limits are established in FGFACILITY

II. MATERIAL LIMIT(S)

Material	Limit	Time Period / Operating Scenario	Equipment	Monitoring / Testing Method	Underlying Applicable Requirements
1. Resins	4 tons/month	Calendar month	EUPUNBCM	SC VI.3	R 336.1702(c) R 336.1205 R 336.2810
2. Resins	48 tons/year	12-month rolling time period as determined at the end of each calendar month	EUPUNBCM	SC VI.3	R 336.1702(c) R 336.1205 R 336.2810

III. PROCESS/OPERATIONAL RESTRICTION(S)

1. The permittee shall not operate EUPUNBCM unless a malfunction abatement plan (MAP) as described in Rule 911(2), for operation of the baghouse, has been submitted and is implemented and maintained. The MAP shall, at a minimum, specify the following:
   a) A complete preventative maintenance program including identification of the supervisory personnel responsible for overseeing the inspection, maintenance, and repair of air-cleaning devices, a description of the items or conditions that shall be inspected, the frequency of the inspections or repairs, and an identification of the major replacement parts that shall be maintained in inventory for quick replacement.
   b) An identification of the source and air-cleaning device operating variables that shall be monitored to detect a malfunction or failure, the normal operating range of these variables, and a description of the method of monitoring or surveillance procedures.
   c) A description of the corrective procedures or operational changes that shall be taken in the event of a malfunction or failure to achieve compliance with the applicable emission limits.

If at any time the MAP fails to address or inadequately addresses an event that meets the characteristics of a malfunction, the permittee shall amend the MAP within 45 days after such an event occurs. The permittee shall also amend the MAP within 45 days, if new equipment is installed or upon request from the District Supervisor. The permittee shall submit the MAP and any amendments to the MAP to the AQD District Supervisor for review and approval. If the AQD does not notify the permittee within 90 days of submittal, the MAP or amended MAP shall be considered approved. Until an amended plan is approved, the permittee shall implement corrective procedures or operational changes to achieve compliance with all applicable emission limits. **(R 336.1225, R 336.1331, R 336.1910, R 336.1911, R 336.2803, R 336.2804, R 336.2810)**

IV. DESIGN/EQUIPMENT PARAMETER(S)

1. The permittee shall not operate EUPUNBCM unless the associated fabric filter collector is installed, maintained, and operated in accordance with the manufacturer's recommendations. **(R 336.1205, R 336.1224, R 336.1225, R 336.1331, R 336.1910, R 336.2810)**

2. The permittee shall not operate EUPUNBCM unless a gauge, which measures the pressure drop across the fabric filter collector and sounds an alarm when the pressure drop exceeds 10 inches water, is installed, maintained and operated in a satisfactory manner. **(R 336.1224, R 336.1225, R 336.1301, R 336.1331, R 336.1910, R 336.2810)**

V. TESTING/SAMPLING

Records shall be maintained on file for a period of five years. **(R 336.1201(3))**

1. Once every five years, the permittee shall determine the VOC content, water content and density of any VOC containing material (excluding resin binder system) used in EUPUNBCM, as received, using federal Reference Test Method 24. Upon prior written approval by the AQD District Supervisor, the permittee may determine the VOC content from manufacturer's formulation data. If the Method 24 and the formulation values should differ, the permittee shall use the Method 24 results to determine compliance. **(R 336.1225, R 336.1702(a), R 336.2802)**

2. The permittee shall verify every six months the visible emissions from stack SVL-BH by conducting 1-hour visible emissions readings following the procedures specified in Federal Reference Test Method 9. Each visible emission reading shall be taken during routine operating conditions. Records of the Method 9 readings shall be made available to the District Supervisor upon request. **(R 336.1205, R 336.1702)**

VI. MONITORING/RECORDKEEPING

Records shall be maintained on file for a period of five years. **(R 336.1201(3))**

1. The permittee shall measure continuously and record daily while operating, the differential pressure (ΔP) measured in inches of water across the baghouse. **(R 336.1201(3))**

2. The permittee shall maintain records of the hours of operation of the process. **(R 336.1201(3))**

3. The permittee shall keep a separate record of the following for EUPUNBCM on a daily averaging period:
   a) The type of each material used. This includes but is not limited to resin material, wash or cleaning solvents, makeup solvents, purge and clean-up solvents.
   b) Chemical composition of each material, including weight percent of each component.
   c) The VOC content of each material, with and without water and exempt solvents, (in percent by weight or pounds per gallon), as received and as applied.
   d) The usage rate (in pounds or gallons) of each material as applied including resin use records on a monthly and 12 month rolling time period basis.
   e) The actual hours of operation.
   f) VOC emission calculations determining an average hourly emission rate in pounds per hour for each calendar day.
   g) VOC emission calculations determining the monthly emission rate and the annual emission rate in tons per 12-month rolling time period as determined at the end of each calendar month.

The permittee shall keep the records on file at the facility, in a format acceptable to the AQD District Supervisor, and make them available to the Department upon request. **(R 336.1224, R 336.1225, R 336.1702(a), R 336.2810)**

VII. REPORTING

NA

VIII. STACK/VENT RESTRICTION(S)

Stack parameter requirements are established in FGFACILITY

IX. OTHER REQUIREMENT(S)

NA

Footnotes:
[1] This condition is state only enforceable and was established pursuant to Rule 201(1)(b).

EUSHELLCM
EMISSION UNIT CONDITIONS

DESCRIPTION

Shell core making – Resin coated sand is fed to a pattern that is preheated and coated with a release agent. Heat from the pattern cures the sand mix into the desired shape.

Flexible Group ID: FGFACILITY, FGMACTZZZZZ

POLLUTION CONTROL EQUIPMENT

Fabric filter collector (baghouse) control for EUSHELLCM includes Baghouse L then vented to stack SVL-BH.

I. EMISSION LIMIT(S)

Pollutant	Limit	Time Period / Operating Scenario	Equipment	Monitoring / Testing Method	Underlying Applicable Requirements
1. VOC	1.83 pph	Hour	EUSHELLCM	SC VI.3	R 336.1702(a) R 336.2810
2. VOC	2.85 tpy	12-month rolling time period as determined at the end of each calendar month	EUSHELLCM	SC VI.3	R 336.1702(a) R 336.2810
3. VE	10% opacity	Hourly	EUSHELLCM	SC V.2	R 336.1301(1)(c)

[a]Stack particulate emission limits are established in FGFACILITY

II. MATERIAL LIMIT(S)

Material	Limit	Time Period / Operating Scenario	Equipment	Monitoring / Testing Method	Underlying Applicable Requirements
Shell Cores	1500 tons	12-month rolling time period, as determined at the end of each calendar month	EUSHELLCM	SC VI.2	R 336.1702 R 336.2810 R 336.1205

III. PROCESS/OPERATIONAL RESTRICTION(S)

1. The permittee shall not operate EUSHELLCM unless a malfunction abatement plan (MAP) as described in Rule 911(2), for operation of the baghouse, has been submitted and is implemented and maintained. The MAP shall, at a minimum, specify the following:
   a) A complete preventative maintenance program including identification of the supervisory personnel responsible for overseeing the inspection, maintenance, and repair of air-cleaning devices, a description of the items or conditions that shall be inspected, the frequency of the inspections or repairs, and an identification of the major replacement parts that shall be maintained in inventory for quick replacement.
   b) An identification of the source and air-cleaning device operating variables that shall be monitored to detect a malfunction or failure, the normal operating range of these variables, and a description of the method of monitoring or surveillance procedures.
   c) A description of the corrective procedures or operational changes that shall be taken in the event of a malfunction or failure to achieve compliance with the applicable emission limits.

If at any time the MAP fails to address or inadequately addresses an event that meets the characteristics of a malfunction, the permittee shall amend the MAP within 45 days after such an event occurs. The permittee shall also amend the MAP within 45 days, if new equipment is installed or upon request from the District Supervisor. The permittee shall submit the MAP and any amendments to the MAP to the AQD District Supervisor for review and approval. If the AQD does not notify the permittee within 90 days of submittal, the MAP or amended MAP shall be considered approved. Until an amended plan is approved, the permittee shall implement corrective procedures or operational changes to achieve compliance with all applicable emission limits. **(R 336.1225, R 336.1331, R 336.1910, R 336.1911, R 336.2803, R 336.2804, R 336.2810)**

IV. DESIGN/EQUIPMENT PARAMETER(S)

1. The permittee shall not operate EUSHELLCM unless the associated fabric filter collector is installed, maintained, and operated in accordance with the manufacturer's recommendations. **(R 336.1205, R 336.1224, R 336.1225, R 336.1331, R 336.1910, R 336.2810)**

2. The permittee shall not operate EUSHELLCM unless a gauge, which measures the pressure drop across the fabric filter collector and sounds an alarm when the pressure drop exceeds 10 inches water, is installed, maintained and operated in a satisfactory manner. **(R 336.1224, R 336.1225, R 336.1301, R 336.1331, R 336.1910, R 336.2803, R 336.2804, R 336.2810)**

V. TESTING/SAMPLING

Records shall be maintained on file for a period of five years. **(R 336.1201(3))**

1. Once every five years, the permittee shall determine the VOC content, water content and density of any VOC containing material (excluding resin binder system) used in EUSHELLCM, as received, using federal Reference Test Method 24. Upon prior written approval by the AQD District Supervisor, the permittee may determine the VOC content from manufacturer's formulation data. If the Method 24 and the formulation values should differ, the permittee shall use the Method 24 results to determine compliance. **(R 336.1225, R 336.1702(a), R 336.2001, R 336.2003, R 336.2004, R 336.2810)**

2. The permittee shall verify every six months the visible emissions from stack SVL-BH by conducting 1-hour visible emissions readings following the procedures specified in Federal Reference Test Method 9. Each visible emission reading shall be taken during routine operating conditions. Records of the Method 9 readings shall be made available to the District Supervisor upon request. **(R 336.1205, R 336.1702)**

VI. MONITORING/RECORDKEEPING

Records shall be maintained on file for a period of five years. **(R 336.1201(3))**

1. The permittee shall measure continuously and record daily while operating, the differential pressure (ΔP) measured in inches of water across the baghouse. **(R 336.1201(3))**

2. The permittee shall maintain records of the tons of shell cores produced and hours of operation of the process. **(R 336.1201(3))**

3. The permittee shall keep a separate record of the following for EUSHELLCM on a daily averaging period:
   a) The type of each material used. This includes but is not limited to resin material, wash or cleaning solvents, makeup solvents, purge and clean-up solvents.
   b) Chemical composition of each material, including weight percent of each component.
   c) The VOC content of each material (in percent by weight or pounds per gallon), as received and as applied.
   d) The usage rate (in pounds or gallons) of each material as applied.
   e) The actual hours of operation.
   f) VOC emission calculations determining an average hourly emission rate in pounds per hour for each calendar day.
   g) VOC emission calculations determining the monthly emission rate and the annual emission rate in tons per 12-month rolling time period as determined at the end of each calendar month.

The permittee shall keep the records on file at the facility, in a format acceptable to the AQD District Supervisor, and make them available to the Department upon request. **(R 336.1224, R 336.1225, R 336.1702(a), R 336.2810)**

VII. REPORTING

NA

VIII. STACK/VENT RESTRICTION(S)

Stack parameter requirements are established in FGFACILITY

IX. OTHER REQUIREMENT(S)

NA

Footnotes:
[1] This condition is state only enforceable and was established pursuant to Rule 201(1)(b).

EULCLREPAIR
EMISSION UNIT CONDITIONS

DESCRIPTION

Removal and replacement of refractory ladles used to protect the ladle from the heat of the molten metal.

Flexible Group ID: FGFACILITY, FGMACTZZZZZ

POLLUTION CONTROL EQUIPMENT

Fabric filter collector (baghouse) control for EULDLREPAIR includes Baghouse K then vented to stack SVK-BH.

I. EMISSION LIMIT(S)

Stack particulate emission limits are established in FGFACILITY

II. MATERIAL LIMIT(S)

NA

III. PROCESS/OPERATIONAL RESTRICTION(S)

1. The permittee shall not operate EULDLREPAIR unless a malfunction abatement plan (MAP) as described in Rule 911(2), for operation of the baghouse, has been submitted and is implemented and maintained. The MAP shall, at a minimum, specify the following:
   a) A complete preventative maintenance program including identification of the supervisory personnel responsible for overseeing the inspection, maintenance, and repair of air-cleaning devices, a description of the items or conditions that shall be inspected, the frequency of the inspections or repairs, and an identification of the major replacement parts that shall be maintained in inventory for quick replacement.
   b) An identification of the source and air-cleaning device operating variables that shall be monitored to detect a malfunction or failure, the normal operating range of these variables, and a description of the method of monitoring or surveillance procedures.
   c) A description of the corrective procedures or operational changes that shall be taken in the event of a malfunction or failure to achieve compliance with the applicable emission limits.

   If at any time the MAP fails to address or inadequately addresses an event that meets the characteristics of a malfunction, the permittee shall amend the MAP within 45 days after such an event occurs. The permittee shall also amend the MAP within 45 days, if new equipment is installed or upon request from the District Supervisor. The permittee shall submit the MAP and any amendments to the MAP to the AQD District Supervisor for review and approval. If the AQD does not notify the permittee within 90 days of submittal, the MAP or amended MAP shall be considered approved. Until an amended plan is approved, the permittee shall implement corrective procedures or operational changes to achieve compliance with all applicable emission limits. **(R 336.1225, R 336.1331, R 336.1910, R 336.1911, R 336.2803, R 336.2804, R 336.2810)**

IV. DESIGN/EQUIPMENT PARAMETER(S)

1. The permittee shall not operate EULDLREPAIR unless the fabric filter collector is installed, maintained, and operated in accordance with the manufacturer's recommendations. **(R 336.1205, R 336.1224, R 336.1225, R 336.1331, R 336.1910, R 336.2803, R 336.2804, R 336.2810)**

2. The permittee shall not operate EULDLREPAIR unless a gauge, which measures the pressure drop across the fabric filter collector and sounds an alarm when the pressure drop exceeds 10 inches water, is installed, maintained and operated in a satisfactory manner. **(R 336.1224, R 336.1225, R 336.1910, R 336.2810)**

V. TESTING/SAMPLING

Records shall be maintained on file for a period of five years. **(R 336.1201(3))**

NA

VI. MONITORING/RECORDKEEPING

Records shall be maintained on file for a period of five years. **(R 336.1201(3))**

1. The permittee shall monitor and record, in a satisfactory manner, the pressure drop across the baghouse for EULDLREPAIR on a once per operating shift basis. **(R 336.1224, R 336.1225, R 336.1331, R 336.1910, R 336.2810)**

VII. REPORTING

NA

VIII. STACK/VENT RESTRICTION(S)

Stack parameter requirements are established in FGFACILITY

IX. OTHER REQUIREMENT(S)

NA

Footnotes:
[1] This condition is state only enforceable and was established pursuant to Rule 201(1)(b).

EUWASTESAND
EMISSION UNIT CONDITIONS

DESCRIPTION

The removal and disposition of spent sand from the system.

Flexible Group ID: FGFACILITY, FGMACTZZZZZ

POLLUTION CONTROL EQUIPMENT

Fabric filter collector (baghouse) control for EUWASTESAND includes Baghouses H and J then vented to stack SVHJ-BH.

I. EMISSION LIMIT(S)

Stack particulate emission limits are established in FGFACILITY

II. MATERIAL LIMIT(S)

NA

III. PROCESS/OPERATIONAL RESTRICTION(S)

1. The permittee shall not operate EUWASTESAND unless a malfunction abatement plan (MAP) as described in Rule 911(2), for operation of the baghouses, has been submitted and is implemented and maintained. The MAP shall, at a minimum, specify the following:
   a) A complete preventative maintenance program including identification of the supervisory personnel responsible for overseeing the inspection, maintenance, and repair of air-cleaning devices, a description of the items or conditions that shall be inspected, the frequency of the inspections or repairs, and an identification of the major replacement parts that shall be maintained in inventory for quick replacement.
   b) An identification of the source and air-cleaning device operating variables that shall be monitored to detect a malfunction or failure, the normal operating range of these variables, and a description of the method of monitoring or surveillance procedures.
   c) A description of the corrective procedures or operational changes that shall be taken in the event of a malfunction or failure to achieve compliance with the applicable emission limits.

   If at any time the MAP fails to address or inadequately addresses an event that meets the characteristics of a malfunction, the permittee shall amend the MAP within 45 days after such an event occurs. The permittee shall also amend the MAP within 45 days, if new equipment is installed or upon request from the District Supervisor. The permittee shall submit the MAP and any amendments to the MAP to the AQD District Supervisor for review and approval. If the AQD does not notify the permittee within 90 days of submittal, the MAP or amended MAP shall be considered approved. Until an amended plan is approved, the permittee shall implement corrective procedures or operational changes to achieve compliance with all applicable emission limits. **(R 336.1225, R 336.1331, R 336.1910, R 336.1911, R 336.2803, R 336.2804, R 336.2810)**

IV. DESIGN/EQUIPMENT PARAMETER(S)

1. The permittee shall not operate EUWASTESAND unless the fabric filter collectors are installed, maintained, and operated in accordance with the manufacturer's recommendations. **(R 336.1205, R 336.1224, R 336.1225, R 336.1331, R 336.1910, R 336.2803, R 336.2804, R 336.2810)**

2. The permittee shall not operate EUWASTESAND unless a gauge, which measures the pressure drop across each fabric filter collector and sounds an alarm when the pressure drop exceeds 10 inches water, is installed, maintained and operated in a satisfactory manner. **(R 336.1224, R 336.1225, R 336.1331, R 336.1910, R 336.2810)**

V. TESTING/SAMPLING

Records shall be maintained on file for a period of five years. **(R 336.1201(3))**

NA

VI. MONITORING/RECORDKEEPING

Records shall be maintained on file for a period of five years. **(R 336.1201(3))**

1. The permittee shall monitor and record, in a satisfactory manner, the pressure drop across each baghouse for EUWASTESAND on a once per operating shift basis. **(R 336.1224, R 336.1225, R 336.1331, R 336.1910, R 336.2810)**

VII. REPORTING

NA

VIII. STACK/VENT RESTRICTION(S)

Stack parameter requirements are established in FGFACILITY

IX. OTHER REQUIREMENT(S)

NA

Footnotes:
[1] This condition is state only enforceable and was established pursuant to Rule 201(1)(b).

FLEXIBLE GROUP SPECIAL CONDITIONS

FLEXIBLE GROUP SUMMARY TABLE

The descriptions provided below are for informational purposes and do not constitute enforceable conditions.

Flexible Group ID	Flexible Group Description	Associated Emission Unit IDs
FGMELTING	Electric Induction Furnace Melting - Four (4) Electric Induction Furnaces (EIFs) to melt and process charge material. The design melt rate is 28 tons per hour and permit requested annual limit of 128,000 tons per year.	EUEIF1 EUEIF2 EUEIF3 EUEIF4
FGPOURCOOL	The pouring and subsequent cooling of molten metal cast in a sand mold. The mold and casting is subsequently transferred to Shakeout.	EULMLPC EU1230PC
FGSHAKEOUT	The separation of mold and core sand from the casting. Sprue is subsequently transferred to Charge Handling, while mold and core sand is discharged to conveyors that are part of Sand Handling and Moldmaking.	EULMLSO EU1230SO
FGCORECHEM	The application of a VOC-containing refractory material (slurry) to the core. The core is subsequently ignited (i.e. lightoff) to dry and partially destroy the VOCs. And the application on an "as needed basis" of a material to promote the release of the core from the pattern.	EUCOREWASH EUCORERELEASE
FGNATGASUNITS	Various natural gas combustion sources throughout the facility.	EUMUAGEN EUHTRFDRYOFF EUHTRSUPPOFF EUHTROILBLD EUINFARED EUBOILERS EUFNCHEAT EULDLHEAT EULDLREPAIRHTR EUDUCTHTRS EUDIPTANKHTR EUDIPCUREOVEN EUPUNBBOILER EUSCALEPITBOILER EUSHELLHEATERS
FGEG	Two (2) natural gas fired emergency generators rated at 300 kW each.	EUEG1 EUEG2

Flexible Group ID	Flexible Group Description	Associated Emission Unit IDs
FGMACTZZZZZ	All emission units throughout the facility subject to MACT ZZZZZ. This includes all processes related to production.	EUCHRGHAND EUEIF1 EUEIF2 EUEIF3 EUEIF4 EUDUCTINOC EUMLTXFER EULMLPC EULMLSO EU1230PC EU1230SO EUSHMM EUBLAST EUGRIND EUDIPTANK EUPUNBCM EUSHELLCM EUCOREWASH EUCORERELEASE EULDLREPAIR EUWASTESAND EUMUAGEN EUHTRFDRYOFF EUHTRSUPPOFF EUHTROILBLD EUINFARED EUBOILERS EUFNCHEAT EULDLHEAT EULDLREPAIRHTR EUDUCTHTRS EUDIPTANKHTR EUDIPCUREOVEN EUPUNBBOILER EUSCALEPITBOILER EUSHELLHEATERS

FGMELTING
FLEXIBLE GROUP CONDITIONS

DESCRIPTION

This flexible group includes four (4) electric induction melting furnaces.

Emission Unit: EUEIF1, EUEIF2, EUEIF3, EUEIF4

POLLUTION CONTROL EQUIPMENT

Fabric filter collector (baghouse) control for FGMELTING includes Baghouses A and B then vented to stack SVAB-BH.

I. EMISSION LIMIT(S)

Pollutant	Limit	Time Period / Operating Scenario	Equipment	Monitoring / Testing Method	Underlying Applicable Requirements
1. VOC	0.84 pph	Hourly	FGMELTING	SC V.2	R 336.1702(a) R 336.2803 R 336.2804 R 336.2810
2. VOC	1.92 tpy	12-month rolling time period as determined at the end of each calendar month	FGMELTING	SC V.2, SC VI.3, VI.4	R 336.1702(a) R 336.2803 R 336.2804 R 336.2810
3. CO	9.24 pph	Hourly	FGMELTING	SC V.2	R 336.2804 R 336.2810
4. CO	21.12 tpy	12-month rolling time period as determined at the end of each calendar month	FGMELTING	SC V.2, SC VI.3, VI.4	R 336.2804 R 336.2810
5. VE	10% opacity	Hourly	FGMELTING	SC V.1	R 336.1301(1)(c) R 336.2810

[a]Stack particulate emission limits are established in FGFACILITY

II. MATERIAL LIMIT(S)

Material	Limit	Time Period / Operating Scenario	Equipment	Monitoring / Testing Method	Underlying Applicable Requirements
1. Charged material	128,000 tpy	12-month rolling time period as determined at the end of each calendar month	FGMELTING	SC VI.4	R 336.1205 R 336.1225 R 336.1702 R 336.2810

III. PROCESS/OPERATIONAL RESTRICTION(S)

1. The permittee shall not operate FGMELTING unless a malfunction abatement plan (MAP) as described in Rule 911(2), for operation of the baghouses, has been submitted and is implemented and maintained. The MAP shall, at a minimum, specify the following:
   a) A complete preventative maintenance program including identification of the supervisory personnel responsible for overseeing the inspection, maintenance, and repair of air-cleaning devices, a description of the items or conditions that shall be inspected, the frequency of the inspections or repairs, and an identification of the major replacement parts that shall be maintained in inventory for quick replacement.
   b) An identification of the source and air-cleaning device operating variables that shall be monitored to detect a malfunction or failure, the normal operating range of these variables, and a description of the method of monitoring or surveillance procedures.
   c) A description of the corrective procedures or operational changes that shall be taken in the event of a malfunction or failure to achieve compliance with the applicable emission limits.

   If at any time the MAP fails to address or inadequately addresses an event that meets the characteristics of a malfunction, the permittee shall amend the MAP within 45 days after such an event occurs. The permittee shall also amend the MAP within 45 days, if new equipment is installed or upon request from the District Supervisor. The permittee shall submit the MAP and any amendments to the MAP to the AQD District Supervisor for review and approval. If the AQD does not notify the permittee within 90 days of submittal, the MAP or amended MAP shall be considered approved. Until an amended plan is approved, the permittee shall implement corrective procedures or operational changes to achieve compliance with all applicable emission limits. **(R 336.1225, R 336.1331, R 336.1910, R 336.1911, R 336.2803, R 336.2804, R 336.2810)**

IV. DESIGN/EQUIPMENT PARAMETER(S)

1. The permittee shall not operate FGMELTING unless the fabric filter collectors are installed, maintained, and operated in accordance with the manufacturer's recommendations. **(R 336.1205, R 336.1224, R 336.1225, R 336.1331, R 336.1910, R 336.2803, R 336.2804, R 336.2810)**

2. The permittee shall not operate FGMELTING unless a gauge, which measures the pressure drop across each fabric filter collector and sounds an alarm when the pressure drop exceeds 10 inches water, is installed, maintained and operated in a satisfactory manner. **(R 336.1224, R 336.1225, R 336.1301, R 336.1910, R 336.2810)**

V. TESTING/SAMPLING

Records shall be maintained on file for a period of five years. **(R 336.1201(3))**

1. The permittee shall verify every six months the visible emissions from FGMELTING (stack SVAB-BH) by conducting 1-hour visible emissions readings following the procedures specified in Federal Reference Test Method 9. Each visible emission reading shall be taken during routine operating conditions. Records of the Method 9 readings shall be made available to the District Supervisor upon request. **(R 336.1301, R 336.2810)**

2. The permittee shall verify every five years the CO and VOC emission rates from FGMELTING (baghouse stack SVAB-BH) with all four EIFs operating simultaneously by testing at owner's expense, in accordance with Department requirements. No less than 60 days prior to testing, the permittee shall submit a complete test plan to the AQD Technical Programs Unit and District Office. The AQD must approve the final plan prior to testing. Verification of emission rates includes the submittal of a complete report of the test results to the AQD Technical Programs Unit and District Office within 60 days following the last date of the test. **(R 336.1205, R 336.1702, R 336.2803, R 336.2804, R 336.2810)**

3. The permittee shall perform and record the results of a non-certified visible emission check on all of the emission points from FGMELTING at least once per calendar day during routine operating conditions. The visible emission check shall simply verify the presence of visible emissions and need not follow the procedures specified in Federal Reference Test Method 9. Therefore, multiple stacks may be observed simultaneously. Each visible emission check shall be taken during routine operating conditions and be a minimum of 6 minutes. If visible emissions are observed, the permittee shall immediately initiate corrective actions and document the corrective actions taken. **(R 336.1201(3))**

VI. MONITORING/RECORDKEEPING

Records shall be maintained on file for a period of five years. **(R 336.1201(3))**

1. The permittee shall complete all required calculations/records in a format acceptable to the AQD District Supervisor and make them available by the last day of the calendar month, for the previous calendar month, unless otherwise specified in any monitoring/recordkeeping special condition. **(R 336.1205(1)(a)&(b), R 336.1702, R 336.2803, R 336.2804, R 336.2810)**

2. The permittee shall monitor and record, in a satisfactory manner, the pressure drop across each baghouse for FGMELTING on a once per operating shift basis. **(R 336.1224, R 336.1225, R 336.1301, R 336.1910, R 336.2810)**

3. The permittee shall monitor and record, in a satisfactory manner, the daily hours of operation and the tons of metal charged to FGMELTING on an hourly basis using a calendar day average, and calculations of hours and tons on a monthly, and 12-month rolling time period basis. The permittee shall keep all records on file at the facility and make them available to the Department upon request. **(R 336.1225, R 336.2803, R 336.2804, R 336.2810)**

4. The permittee shall calculate and keep records of monthly VOC and CO emissions for FGMELTING, to verify compliance with SC I.2 and SC I.4, using the monthly metal charging rate for FGMELTING and emission factors in lb/ton metal melted generated from the stack test conducted pursuant to SC V.2. Prior to completion of the stack test emissions may be calculated with emission factors acceptable to the AQD District Supervisor used to determine the emission limits. **(R 336.1205, R 336.2803, R 336.2804, R 336.2810)**

5. The permittee shall maintain records of all information necessary to demonstrate compliance with the emission limits of this permit, including records of visible emissions observations required in SC V.1 and V.3. **(R 336.1225, R 336.1331(1)(c), R 336.1702, R 336.2803, R 336.2804, R 336.2810)**

VII. REPORTING

NA

VIII. STACK/VENT RESTRICTION(S)

Stack parameter requirements are established in FGFACILITY

IX. OTHER REQUIREMENT(S)

NA

Footnotes:
[1] This condition is state only enforceable and was established pursuant to Rule 201(1)(b).

FGPOURCOOL
FLEXIBLE GROUP CONDITIONS

DESCRIPTION

This flexible group includes the pouring and cooling operations for both production lines (LML and 1230) at the facility. Includes VOC emissions from mold release agent usage. The emission units in this flexible group are controlled by common baghouses.

Emission Unit: EULMLPC, EU1230PC

POLLUTION CONTROL EQUIPMENT

Fabric filter collector (baghouse) control for FGPOURCOOL includes portions of Baghouses A, B and D then vented to stacks SVAB-BH and SVD-BH

I. EMISSION LIMIT(S)

Pollutant	Limit	Time Period / Operating Scenario	Equipment	Monitoring / Testing Method	Underlying Applicable Requirements
1. CO	182.66 pph	Hourly	FGPOURCOOL	SC V.2	R 336.2804 R 336.2810
2. CO	417.5 tpy	12-month rolling time period as determined at the end of each calendar month	FGPOURCOOL	SC VI.4	R 336.2804 R 336.2810
3. VOC	34.75 pph	Hourly	FGPOURCOOL	SC V.2	R 336.1702 R 336.2810
4. VOC	79.42 tpy	12-month rolling time period as determined at the end of each calendar month	FGPOURCOOL	SC VI.4	R 336.1702 R 336.2810
5. NOx	1.92 pph	Hourly	FGPOURCOOL	SC V.2	R 336.2803 R 336.2804
6. NOx	4.38 tpy	12-month rolling time period as determined at the end of each calendar month	FGPOURCOOL	SC VI.4	R 336.2803 R 336.2804
7. SO_2	0.56 pph	Hourly	FGPOURCOOL	SC V.2	R 336.2803 R 336.2804 R 336.2810
8. SO_2	1.28 tpy	12-month rolling time period as determined at the end of each calendar month	FGPOURCOOL	SC VI.4	R 336.2803 R 336.2804 R 336.2810
9. VE	10% opacity	Hourly	FGPOURCOOL	SC V.1	R 336.1301(1)(c) R 336.2810

[a]Stack particulate emission limits are established in FGFACILITY

II. MATERIAL LIMIT(S)

NA

III. PROCESS/OPERATIONAL RESTRICTION(S)

1. The permittee shall not operate FGPOURCOOL unless a malfunction abatement plan (MAP) as described in Rule 911(2), for operation of the baghouses, has been submitted and is implemented and maintained. The MAP shall, at a minimum, specify the following:
   a) A complete preventative maintenance program including identification of the supervisory personnel responsible for overseeing the inspection, maintenance, and repair of air-cleaning devices, a description of the items or conditions that shall be inspected, the frequency of the inspections or repairs, and an identification of the major replacement parts that shall be maintained in inventory for quick replacement.
   b) An identification of the source and air-cleaning device operating variables that shall be monitored to detect a malfunction or failure, the normal operating range of these variables, and a description of the method of monitoring or surveillance procedures.
   c) A description of the corrective procedures or operational changes that shall be taken in the event of a malfunction or failure to achieve compliance with the applicable emission limits.

   If at any time the MAP fails to address or inadequately addresses an event that meets the characteristics of a malfunction, the permittee shall amend the MAP within 45 days after such an event occurs. The permittee shall also amend the MAP within 45 days, if new equipment is installed or upon request from the District Supervisor. The permittee shall submit the MAP and any amendments to the MAP to the AQD District Supervisor for review and approval. If the AQD does not notify the permittee within 90 days of submittal, the MAP or amended MAP shall be considered approved. Until an amended plan is approved, the permittee shall implement corrective procedures or operational changes to achieve compliance with all applicable emission limits. **(R 336.1225, R 336.1331, R 336.1910, R 336.1911, R 336.2803, R 336.2804, R 336.2810)**

IV. DESIGN/EQUIPMENT PARAMETER(S)

1. The permittee shall not operate FGPOURCOOL unless the fabric filter collectors are installed, maintained, and operated in accordance with the manufacturer's recommendations. **(R 336.1205, R 336.1224, R 336.1225, R 336.1331, R 336.1910, R 336.2803, R 336.2804, R 336.2810)**

2. The permittee shall not operate FGPOURCOOL unless a gauge, which measures the pressure drop across each fabric filter collector and sounds an alarm when the pressure drop exceeds 10 inches water, is installed, maintained and operated in a satisfactory manner. **(R 336.1224, R 336.1225, R 336.1301, R 336.1910, R 336.2810)**

V. TESTING/SAMPLING

Records shall be maintained on file for a period of five years. **(R 336.1201(3))**

1. The permittee shall verify every six months the visible emissions from FGPOURCOOL (baghouse stacks SVAB-BH and SVD-BH) by conducting 1-hour visible emissions readings following the procedures specified in Federal Reference Test Method 9. Each visible emission reading shall be taken during routine operating conditions. Records of the Method 9 readings shall be made available to the District Supervisor upon request. **(R 336.1301, R 336.2810)**

2. Every five years the permittee shall verify CO, VOC, NOx, and SO_2 emission rates in pph from FGPOURCOOL (baghouse stacks SVAB-BH and SVD-BH) by testing at owner's expense, in accordance with Department requirements. No less than 60 days prior to testing, the permittee shall submit a complete test plan to the AQD Technical Programs Unit and District Office AQD. The AQD must approve the final plan prior to testing. Verification of emission rates includes the submittal of a complete report of the test results to the AQD Technical Programs Unit and District Office within 60 days following the last date of the test. **(R 336.1301, R 336.1702, R 336.2803, R 336.2804, R 336.2810)**

3. The permittee shall perform and record the results of a non-certified visible emission check on all of the emission points from FGPOURCOOL at least once per calendar day during routine operating conditions. The visible emission check shall simply verify the presence of visible emissions and need not follow the procedures specified in Federal Reference Test Method 9. Therefore, multiple stacks may be observed simultaneously. Each visible emission check shall be taken during routine operating conditions and be a minimum of 6 minutes.

If visible emissions are observed, the permittee shall immediately initiate corrective actions and document the corrective actions taken. **(R 336.1201(3))**

VI. MONITORING/RECORDKEEPING

Records shall be maintained on file for a period of five years. **(R 336.1201(3))**

1. The permittee shall complete all required calculations/records in a format acceptable to the AQD District Supervisor shall make them available by the last day of the calendar month, for the previous calendar month, unless otherwise specified in any monitoring/recordkeeping special condition. **(R 336.1205, R 336.1702, R 336.2803, R 336.2804, R 336.2810)**

2. The permittee shall monitor and record, in a satisfactory manner, the pressure drop across each baghouse for FGPOURCOOL on a once per operating shift basis. **(R 336.1224, R 336.1225, R 336.1301, R 336.1910, R 336.2810)**

3. The permittee shall maintain records of all information necessary to demonstrate compliance with the emission limits of this permit, including records of visible emissions observations required in SC V.1 and V.2. **(R 336.1205, R 336.1225, R 336.1331(1)(c), R 336.1702, R 336.2803, R 336.2804, R 336.2810)**

4. The permittee shall calculate and keep records of monthly and 12-month rolling time period basis VOC, CO, NOx, and SO_2 emissions for FGPOURCOOL, to verify compliance with SC I.2, SC I.4, SC I.6, and SC I.8, using the monthly metal pour rate and emission factors in lb/ton metal poured generated from the stack test conducted pursuant to SC V.1. Prior to completion of the stack test emissions may be calculated with emission factors acceptable to the AQD District Supervisor used to determine the emission limits. **(R 336.1205, R 336.1702, R 336.2803, R 336.2804, R 336.2810)**

5. The permittee shall monitor and record, in a satisfactory manner, the daily hours of operation of FGPOURCOOL on an hourly monthly, and 12-month rolling time period basis. The permittee shall keep all records on file at the facility and make them available to the Department upon request. **(R 336.1225, R 336.2803, R 336.2804, R 336.2810)**

VII. REPORTING

NA

VIII. STACK/VENT RESTRICTION(S)

Stack parameter requirements are established in FGFACILITY

IX. OTHER REQUIREMENT(S)

NA

Footnotes:
[1] This condition is state only enforceable and was established pursuant to Rule 201(1)(b).

FGSHAKEOUT
FLEXIBLE GROUP CONDITIONS

DESCRIPTION

This flexible group includes the shakeout operations for both production lines (LML and 1230) at the facility. The emission units in this flexible group are controlled by common baghouses.

Emission Unit: EULMLSO, EU1230SO

POLLUTION CONTROL EQUIPMENT

Fabric filter collector (baghouse) control for FGSHAKEOUT includes portions Baghouses C, D, and E and vent out stacks SVC-BH, SVD-BH, and SVE-BH.

I. EMISSION LIMIT(S)

Pollutant	Limit	Time Period / Operating Scenario	Equipment	Monitoring / Testing Method	Underlying Applicable Requirements
1. CO	44.57 pph	Hourly	FGSHAKEOUT	SC V.2	R 336.2804 R 336.2810
2. CO	101.88 tpy	12-month rolling time period as determined at the end of each calendar month	FGSHAKEOUT	SC VI.3	R 336.2804 R 336.2810
3. VOC	14.78 pph	Hourly	FGSHAKEOUT	SC V.2	R 336.1702 R 336.2810
4. VOC	33.79 tpy	12-month rolling time period as determined at the end of each calendar month	FGSHAKEOUT	SC VI.3	R 336.1702 R 336.2810
5. NOx	0.06 pph	Hourly	FGSHAKEOUT	SC V.2	R 336.2803 R 336.2804
6. NOx	0.13 tpy	12-month rolling time period as determined at the end of each calendar month	FGSHAKEOUT	SC VI.3	R 336.2803 R 336.2804
7. VE	10% opacity	Hourly	FGSHAKEOUT	SC V.1	R 336.1301(1)(c) R 336.2810

[a]Stack particulate emission limits are established in FGFACILITY

II. MATERIAL LIMIT(S)

NA

III. PROCESS/OPERATIONAL RESTRICTION(S)

1. The permittee shall not operate FGSHAKEOUT unless a malfunction abatement plan (MAP) as described in Rule 911(2), for operation of the baghouses, has been submitted and is implemented and maintained. The MAP shall, at a minimum, specify the following:
   a) A complete preventative maintenance program including identification of the supervisory personnel responsible for overseeing the inspection, maintenance, and repair of air-cleaning devices, a description of the items or conditions that shall be inspected, the frequency of the inspections or repairs, and an identification of the major replacement parts that shall be maintained in inventory for quick replacement.

b) An identification of the source and air-cleaning device operating variables that shall be monitored to detect a malfunction or failure, the normal operating range of these variables, and a description of the method of monitoring or surveillance procedures.
c) A description of the corrective procedures or operational changes that shall be taken in the event of a malfunction or failure to achieve compliance with the applicable emission limits.

If at any time the MAP fails to address or inadequately addresses an event that meets the characteristics of a malfunction, the permittee shall amend the MAP within 45 days after such an event occurs. The permittee shall also amend the MAP within 45 days, if new equipment is installed or upon request from the District Supervisor. The permittee shall submit the MAP and any amendments to the MAP to the AQD District Supervisor for review and approval. If the AQD does not notify the permittee within 90 days of submittal, the MAP or amended MAP shall be considered approved. Until an amended plan is approved, the permittee shall implement corrective procedures or operational changes to achieve compliance with all applicable emission limits. **(R 336.1225, R 336.1331, R 336.1910, R 336.1911, R 336.2803, R 336.2804, R 336.2810)**

IV. DESIGN/EQUIPMENT PARAMETER(S)

1. The permittee shall not operate FGSHAKEOUT unless the fabric filter collectors are installed, maintained, and operated in accordance with the manufacturer's recommendations. **(R 336.1205, R 336.1224, R 336.1225, R 336.1331, R 336.1910, R 336.2803, R 336.2804, R 336.2810)**

2. The permittee shall not operate FGSHAKEOUT unless a gauge, which measures the pressure drop across each fabric filter collector and sounds an alarm when the pressure drop exceeds 10 inches water, is installed, maintained and operated in a satisfactory manner. **(R 336.1224, R 336.1225, R 336.1301, R 336.1910, R 336.2810)**

V. TESTING/SAMPLING

Records shall be maintained on file for a period of five years. **(R 336.1201(3))**

1. The permittee shall verify every six months the visible emissions from FGSHAKEOUT (baghouse stacks SVC-BH, SVD-BH, and SVE-BH) by conducting 1-hour visible emissions readings following the procedures specified in Federal Reference Test Method 9. Each visible emission reading shall be taken during routine operating conditions. Records of the Method 9 readings shall be made available to the District Supervisor upon request. **(R 336.1301, R 336.2810)**

2. Every five years the permittee shall verify CO, VOC, and NOx emission rates from FGSHAKEOUT (baghouse stacks SVC-BH, SVD-BH, and SVE-BH) by testing at owner's expense, in accordance with Department requirements. No less than 60 days prior to testing, the permittee shall submit a complete test plan to the AQD Technical Programs Unit and District Office. The AQD must approve the final plan prior to testing. Verification of emission rates includes the submittal of a complete report of the test results to the AQD Technical Programs Unit and District Office within 60 days following the last date of the test. **(R 336.1301, R 336.1702, R 336.2803, R 336.2804, R 336.2810)**

3. The permittee shall perform and record the results of a non-certified visible emission check on all of the emission points from FGSHAKEOUT at least once per calendar day during routine operating conditions. The visible emission check shall simply verify the presence of visible emissions and need not follow the procedures specified in Federal Reference Test Method 9. Therefore, multiple stacks may be observed simultaneously. Each visible emission check shall be taken during routine operating conditions and be a minimum of 6 minutes. If visible emissions are observed, the permittee shall immediately initiate corrective actions and document the corrective actions taken. **(R 336.1201(3))**

VI. MONITORING/RECORDKEEPING

Records shall be maintained on file for a period of five years. **(R 336.1201(3))**

1. The permittee shall complete all required calculations/records in a format acceptable to the AQD District Supervisor and make them available by the last day of the calendar month, for the previous calendar month, unless otherwise specified in any monitoring/recordkeeping special condition. **(R 336.1205(1)(a)&(b), R 336.1702, R 336.2803, R 336.2804, R 336.2810)**

2. The permittee shall monitor and record, in a satisfactory manner, the pressure drop across each baghouse for FGSHAKEOUT on a once per operating shift basis. **(R 336.1224, R 336.1225, R 336.1301, R 336.1910, R 336.2810)**

3. The permittee shall calculate and keep records of monthly and 12-month rolling time period basis VOC, CO, and NOx emissions for FGSHAKEOUT, to verify compliance with SC I.2, SC I.4, and SC I.6 using the monthly sand processing rate and emission factors in lb/ton sand processed generated from the most recent stack test conducted pursuant to SC V.1. Prior to completion of the stack test emissions may be calculated with emission factors acceptable to the AQD District Supervisor used to determine the emission limits. **(R 336.1205, R 336.1702, R 336.2803, R 336.2804, R 336.2810)**

4. The permittee shall maintain records of all information necessary to demonstrate compliance with the emission limits of this permit, including records of visible emissions observations required in SC V.1 and V.2. **(R 336.1205, R 336.1225, R 336.1331(c), R 336.1702, R 336.2803, R 336.2804, R 336.2810)**

VII. REPORTING

NA

VIII. STACK/VENT RESTRICTION(S)

Stack parameter requirements are established in FGFACILITY

IX. OTHER REQUIREMENT(S)

NA

Footnotes:
[1] This condition is state only enforceable and was established pursuant to Rule 201(1)(b).

FGCORECHEM
FLEXIBLE GROUP CONDITIONS

DESCRIPTION

This flexible group includes the Core Washing – application of VOC-containing refractory material (slurry) to the core. The core is subsequently ignited (i.e. lightoff) to dry and partially destroy the VOCs. Also included is Core Release – the application on an "as needed basis" of a material to promote the release of the core from the pattern.

Emission Unit: EUCOREWASH and EUCORERELEASE

POLLUTION CONTROL EQUIPMENT

NA

I. EMISSION LIMIT(S)

Pollutant	Limit	Time Period / Operating Scenario	Equipment	Monitoring / Testing Method	Underlying Applicable Requirements
1. VOC	1.43 pph	Hour	EUCOREWASH EUCORERELEASE	SC VI.2	R 336.1702(a) R 336.2804
2. VOC	0.22 tons per calendar month	Month	EUCOREWASH EUCORERELEASE	SC VI.2	R 336.1702(a) R 336.2804
3. VOC	2.63 tpy	12-month rolling time period as determined at the end of each calendar month	EUCOREWASH EUCORERELEASE	SC VI.2	R 336.1702(a) R 336.2804

II. MATERIAL LIMIT(S)

Material	Limit	Time Period / Operating Scenario	Equipment	Monitoring / Testing Method	Underlying Applicable Requirements
1. Core Wash Material	6,400 lbs/yr	12-month rolling time period as determined at the end of each calendar month	EUCOREWASH	SC VI.3	R 336.1205 R 336.1225, R 336.1702(a) R 336.2810
2. IPA Thinning Solvent	3,200 lbs/yr	12-month rolling time period as determined at the end of each calendar month	EUCOREWASH	SC VI.3	R 336.1205 R 336.1225, R 336.1702(a) R 336.2810
3. Mold Release – Shell Core	123 lbs/yr	12-month rolling time period as determined at the end of each calendar month	EUCORERELEASE	SC VI.3	R 336.1205 R 336.1225, R 336.1702(a) R 336.2810
4. Mold Release – No Bake	123 lbs/yr	12-month rolling time period as determined at the end of each calendar month	EUCORERELEASE	SC VI.3	R 336.1205 R 336.1225, R 336.1702(a) R 336.2810

III. PROCESS/OPERATIONAL RESTRICTION(S)

1. The permittee shall capture all waste materials and solvents used in FGCORECHEM and shall store them in closed containers. The permittee shall dispose of all waste materials in an acceptable manner in compliance with all applicable state rules and federal regulations. **(R 336.1224, R 336.1225, R 336.1702(a), R 336.2810)**

2. The permittee shall dispose of spent filters in a manner which minimizes the introduction of air contaminants to the outer air. **(R 336.1224, R 336.1370)**

3. The permittee shall handle all VOC and/or HAP containing materials used in FGCORECHEM, including coatings, reducers, solvents and thinners, in a manner to minimize the generation of fugitive emissions. The permittee shall keep containers covered at all times except when operator access is necessary. **(R 336.1201(3), R 336.1224, R 336.1225, R 336.1702(a), R 336.2810)**

4. The permittee shall establish and implement specific procedures for the lightoff of core washes in a manner which minimizes the introduction of air contaminants to the outer air. **(R 336.1224, R 336.1370)**.

IV. DESIGN/EQUIPMENT PARAMETER(S)

NA

V. TESTING/SAMPLING

Records shall be maintained on file for a period of five years. **(R 336.1201(3))**

1. The permittee shall determine the HAP content of any coating, reducer, thinner, additive, catalyst, and solvent used in FGCORECHEM as received and as applied, using manufacturer's formulation data. Upon request of the AQD District Supervisor, the permittee shall verify the manufacturer's HAP formulation data using EPA Test Method 311. **(R 336.1201(3))**

2. The permittee shall determine the VOC content, water content and density of any coating, reducer, thinner, additive, catalyst, and solvent used in FGCORECHEM, as applied and as received, using manufacturer's formulation data. Upon request of the AQD District Supervisor, the permittee shall verify the manufacturer's formulation data using federal Reference Test Method 24. If the Method 24 and the formulation values should differ, the permittee shall use the Method 24 results to determine compliance. **(R 336.1225, R 336.1702(a), R 336.2001, R 336.2003, R 336.2004, R 336.2810)**

VI. MONITORING/RECORDKEEPING

Records shall be maintained on file for a period of five years. **(R 336.1201(3))**

1. The permittee shall complete all required calculations/records in a format acceptable to the AQD District Supervisor and make them available by the last day of the calendar month, for the previous calendar month, unless otherwise specified in any monitoring/recordkeeping special condition. **(R 336.1205, R 336.1225, R 336.1702, R 336.2803, R 336.2804, R 336.2810)**

2. The permittee shall calculate pound per hour and monthly and 12-month rolling time period VOC emissions for FGCORECHEM. The permittee shall keep all records on file at the facility and make them available to the Department upon request. **(R 336.1205, R 336.1702, R 336.2810)**

3. The permittee shall monitor and record the material usage rate of each material listed in SC II.1 – II.4 for FGCORECHEM on a monthly and 12-month rolling time period basis. The permittee shall keep all records on file at the facility and make them available to the Department upon request. **(R 336.1205, R 336.1225, R 336.1702, R 336.2810)**

4. The permittee shall maintain records of all information necessary to demonstrate compliance with the emission limits of this permit. **(R 336.1225, R 336.1702, R 336.2810)**

VII. REPORTING

NA

VIII. STACK/VENT RESTRICTION(S)

1. The permittee shall not discharge the emissions from FGCORECHEM directly into the atmosphere. **(R 336.1205(3), R 336.1225, R 336.2803, R 336.2804)**

IX. OTHER REQUIREMENT(S)

NA

Footnotes:
[1] This condition is state only enforceable and was established pursuant to Rule 201(1)(b).

FGNATGASUNITS
FLEXIBLE GROUP CONDITIONS

DESCRIPTION

Various natural gas combustion sources in the building. The equipment consists of ladle and furnace preheaters, infrared heaters, space heaters, air make up units, heat treat oven, and hot water boiler.

Emission Unit: EUMUAGEN, EUHTRFDRYOFF, EUHTRSUPPOFF, EUHTROILBLD, EUINFARED, EUBOILERS, EUFNCHEAT, EULDLHEAT, EULDLREPAIRHTR, EUDUCTHTRS, EUDIPTANKHTR, EUDIPCUREOVEN, EUPUNBBOILER, EUSCALEPITBOILER, EUSHELLHEATERS

POLLUTION CONTROL EQUIPMENT

NA

I. EMISSION LIMIT(S)

Pollutant	Limit	Time Period / Operating Scenario	Equipment	Monitoring / Testing Method	Underlying Applicable Requirements
1. PM	7.6 lb/MMscf	Instantaneous	FGNATGASUNITS	SC VI.2	R 336.1331(1)(c) R 336.2803, R 336.2804, R 336.2810
2. PM10	7.6 lb/MMscf	Instantaneous	FGNATGASUNITS	SC VI.2	R 336.2803, R 336.2804, R 336.2810
3. PM2.5	7.60 lb/MMscf	Instantaneous	FGNATGASUNITS	SC VI.2	R 336.2803, R 336.2804, R 336.2810
4. NOx	100 lb/MMscf	Instantaneous	FGNATGASUNITS	SC VI.2	R 336.2803, R 336.2804
5. CO	84 lb/MMscf	Instantaneous	FGNATGASUNITS	SC VI.2	R 336.2804, R 336.2810
6. VOCs	5.5 lb/MMscf	Instantaneous	FGNATGASUNITS	SC VI.2	R 336.1702, R 336.2804

II. MATERIAL LIMIT(S)

Material	Limit	Time Period / Operating Scenario	Equipment	Monitoring / Testing Method	Underlying Applicable Requirements
1. Natural gas usage	1,022 MMSCF per year	12-month rolling time period as determined at the end of each calendar month.	FGNATGASUNITS	SC VI.2	R 336.1225 R 336.2803, R 336.2804
2. Natural gas usage	2.80 MMSCF per day	Daily average calculated on a monthly basis	FGNATGASUNITS	SC VI.3	R 336.1225 R 336.2803, R 336.2804

3. The permittee shall burn only pipeline quality natural gas in FGNATGASUNITS. **(R 336.1205(1)(a), R 336.1702, R 336.2810)**

III. PROCESS/OPERATIONAL RESTRICTION(S)

NA

IV. DESIGN/EQUIPMENT PARAMETER(S)

NA

V. TESTING/SAMPLING

Records shall be maintained on file for a period of five years. **(R 336.1201(3))**

NA

VI. MONITORING/RECORDKEEPING

Records shall be maintained on file for a period of five years. **(R 336.1201(3))**

1. The permittee shall complete all required calculations/records in a format acceptable to the AQD District Supervisor and make them available by the last day of the calendar month, for the previous calendar month, unless otherwise specified in any monitoring/recordkeeping special condition. **(R 336.1205(1)(a)&(b), R 336.1702, R 336.2803, R 336.2804, R 336.2810)**

2. The permittee shall monitor and record, in a satisfactory manner, the natural gas usage and the permittee shall calculate the emission rates of PM, PM10, PM2.5, NOx, CO, and VOC for FGNATGASUNITS using emission factors acceptable to the AQD District Supervisor on a monthly, and 12-month rolling time period basis. The permittee shall keep all records on file at the facility and make them available to the Department upon request. **(R 336.1205(1)(a)&(b), R 336.1225, R 336.2803, R 336.2804, R 336.2810)**

3. The permittee shall monitor and record, in a satisfactory manner, the average daily natural gas usage rate and hours of operation of FGNATGASUNITS on a monthly basis. The permittee shall keep all records on file at the facility and make them available to the Department upon request. **(R 336.1205(1)(a)&(b), R 336.1225, R 336.2803, R 336.2804, R 336.2810)**

4. The permittee shall maintain records of all information necessary to demonstrate compliance with the emission limits of this permit. **(R 336.1205(1)(a)&(b), R 336.1225, R 336.1331(c), R 336.1702, R 336.2810)**

VII. REPORTING

NA

VIII. STACK/VENT RESTRICTION(S)

NA

IX. OTHER REQUIREMENT(S)

NA

Footnotes:
[1] This condition is state only enforceable and was established pursuant to Rule 201(1)(b).

FGEG
FLEXIBLE GROUP CONDITIONS

DESCRIPTION

Emergency Engines subject to 40 CFR 60 Subpart JJJJ and 40 CFR 63 Subpart ZZZZ, National Emissions Standards for Hazardous Air Pollutants for Stationary Reciprocating Internal Combustion Engines (RICE)

New/Reconstructed emergency engines ≤ 500 HP constructed on or after June 12, 2006

Emission Unit: EUEG1—300 KW Natural Gas-Fired Emergency Generator, EUEG2—300 KW Natural Gas-Fired Emergency Generator

POLLUTION CONTROL EQUIPMENT

Each engine is a certified engine with associated required controls.

I. EMISSION LIMIT(S)

Pollutant	Limit	Time Period / Operating Scenario	Equipment	Monitoring / Testing Method	Underlying Applicable Requirements
1. NOx	2.0 g/HP-hr	Hourly	FGEG	SC VI.2	40 CFR 60.4233(e) (Table 1) R 336.2803 R 336.2804
2. CO	4.0 g/HP-hr	Hourly	FGEG	SC VI.2	40 CFR 60.4233(e) (Table 1) R 336.2804 R 336.2810
3. VOC	1.0 g/HP-hr	Hourly	FGEG	SC VI.2	40 CFR 60.4233(e) (Table 1) R 336.1702
4. PM10	0.216 pph	Hourly	each engine in FGEG	SC V.2	R 336.2810
5. VOC	0.66 pph	Hourly	each engine in FGEG	SC V.2	R 336.2810

II. MATERIAL LIMIT(S)

1. The permittee shall burn only pipeline quality natural gas in FGEG. **(R 336.1205(1)(a), R 336.1702, R 336.2810, 40 CFR 60.4230)**

III. PROCESS/OPERATIONAL RESTRICTION(S)

1. The permittee shall submit to the AQD District Supervisor, for review and approval, a preventative maintenance / malfunction abatement plan (PM / MAP) for FGEG. After approval of the PM / MAP by the AQD District Supervisor, the permittee shall not operate FGEG unless the PM / MAP, or an alternate plan approved by the AQD District Supervisor, is implemented and maintained. The plan shall incorporate procedures recommended by the equipment manufacturer as well as incorporating standard industry practices. At a minimum the plan shall include:
   a) Identification of the equipment and, if applicable, air-cleaning device and the supervisory personnel responsible for overseeing the inspection, maintenance, and repair.
   b) Description of the items or conditions to be inspected and frequency of the inspections or repairs.

c) Identification of the equipment and, if applicable, air-cleaning device, operating parameters that shall be monitored to detect a malfunction or failure, the normal operating range of these parameters and a description of the method of monitoring or surveillance procedures.
d) Identification of the major replacement parts that shall be maintained in inventory for quick replacement.
e) A description of the corrective procedures or operational changes that shall be taken in the event of a malfunction or failure to achieve compliance with the applicable emission limits.

If the plan fails to address or inadequately addresses an event that meets the characteristics of a malfunction at the time the plan is initially developed, the owner or operator shall revise the plan within 45 days after such an event occurs and submit the revised plan for approval to the AQD District Supervisor. Should the AQD determine the PM / MAP to be inadequate, the AQD District Supervisor may request modification of the plan to address those inadequacies. **(R 336.1205, R 336.1702(a), R 336.1910, R 336.1911, R 336.1912, R 336.2803, R 336.2804, R 336.2810)**

2. The permittee shall not operate each engine in FGEG for more than 150 hours per year on a 12-month rolling time period basis as determined at the end of each calendar month. **(R 336.1205(1)(a)&(b), R 336.1225, R 336.1702(a), R 336.2803, R 336.2804))**

3. The permittee shall not operate each engine in FGEG for more than 1-hour per 24-hour time period for maintenance and/or testing. **(R 336.1205(1)(a)&(b), R 336.1225, R 336.1702(a), R 336.2803, R 336.2804))**

4. The permittee may operate each engine in FGEG for no more than 100 hours per calendar year for the purpose of necessary maintenance checks and readiness testing, provided that the tests are recommended by Federal, State, or local government, the manufacturer, the vendor, the regional transmission organization or equivalent balancing authority and transmission operator, or the insurance company associated with the engine. The permittee may petition the Department for approval of additional hours to be used for maintenance checks and readiness testing. A petition is not required if the owner or operator maintains records indicating that Federal, State, or local standards require maintenance and testing of emergency internal combustion engines beyond 100 hours per calendar year. **(40 CFR 60.4243(d)(2))**

5. Each engine in FGEG may operate up to 50 hours per calendar year in non-emergency situations, but those 50 hours are counted towards the 100 hours per calendar year provided for maintenance and testing as provided in 40 CFR 60.4243(d)(2). The 50 hours per calendar year for non-emergency situations cannot be used for peak shaving or non-emergency demand response, or to generate income for the permittee to supply non-emergency power as part of a financial arrangement with another entity. **(40 CFR 60.4243(d)(3)**

6. The 50 hours per year for non-emergency situations can be used to supply power as part of a financial arrangement with another entity if all of the following conditions are met:
   a) The engine is dispatched by the local balancing authority or local transmission and distribution system operator.
   b) The dispatch is intended to mitigate local transmission and/or distribution limitations so as to avert potential voltage collapse or line overloads that could lead to the interruption of power supply in a local area or region.
   c) The dispatch follows reliability, emergency operation or similar protocols that follow specific NERC, regional, state, public utility commission or local standards or guidelines.
   d) The power is provided only to the facility itself or to support the local transmission and distribution system.
   e) The owner or operator identifies and records the entity that dispatches the engine and the specific NERC, regional, state, public utility commission or local standards or guidelines that are being followed for dispatching.

   (40 CFR 60.4243(d)(3)(i))

7. The permittee shall operate and maintain each engine included in FGEG such that it meets the emission limits in SC I.1, I.2, and I.3 over the entire life of the engine. **(40 CFR 60.4234, 40 CFR 60.4243(b))**

8. If the permittee purchased a certified engine, according to procedures specified in 40 CFR Part 60 Subpart JJJJ, for the same model year, the permittee shall meet the following requirements for FGEG:
   a) Operate and maintain the certified engine and control device according to the manufacturer's emission-related written instructions,

b) Keep a maintenance plan and the permittee may only change those engine settings that are permitted by the manufacturer. If you do not operate and maintain the certified engine and control device according to the manufacturer's emission-related written instructions, the engine will be considered a non-certified engine, and
c) Meet the requirements as specified in 40 CFR 1068 Subparts A through D.

If the permittee does not operate and maintain the certified engine and control device according to the manufacturer's emission-related written instructions, the engine will be considered a non-certified engine and be subject to SC III.5. **(40 CFR 60.4243(b)(1))**

9. If the permittee purchased a non-certified engine or a certified engine operating in a non-certified manner, the permittee shall keep a maintenance plan for FGEG and shall, to the extent practicable, maintain and operate each engine in a manner consistent with good air pollution control practice for minimizing emissions. **(40 CFR 60.4243(b)(2))**

IV. DESIGN/EQUIPMENT PARAMETER(S)

1. Each engine in FGEG shall be certified to meet the applicable emission standard of 40 CFR 60.4233. The permittee shall install and configure each engine according to the manufacturer's specifications. **(40 CFR 60.4243)**

2. The permittee shall equip and maintain each engine in FGEG with a non-resettable hours meter to track the operating hours. **(R 336.1205(1)(a)&(b), R 336.1225, R 336.1702, R 336.2810, 40 CFR 60.4237)**

3. The nameplate capacity of each engine in FGEG shall not exceed 300 kW, as certified by the equipment manufacturer. **(R 336.1205(1)(a)&(b), 40 CFR 60.4230)**

V. TESTING/SAMPLING

Records shall be maintained on file for a period of five years. **(R 336.1201(3))**

1. If each engine included in FGEG is not installed, configured, operated, and maintained according to the manufacturer's emission-related written instructions, or the permittee changes emission-related settings in a way that is not permitted by the manufacturer, the permittee must demonstrate compliance as follows:
   a) Conduct an initial performance test to demonstrate compliance with the applicable emission standards in 40 CFR 60.4233(e), within 60 days after achieving the maximum production rate at which each engine included in FGEG will be operated, but not later than 180 days after initial startup of each engine included in FGEG, or within 1 year after each engine included in FGEG is no longer installed, configured, operated, and maintained in accordance with the manufacturer's emission-related written instructions, or within 1 year after changing emission-related settings in a way that is not permitted by the manufacturer.
   b) If a performance test is required, the performance tests shall be conducted according to 40 CFR 60.4244.
   c) Conduct subsequent performance testing every 8,760 hours of engine operation or every 3 years, whichever comes first, thereafter to demonstrate compliance with the applicable emission standards.

   If a performance test is required, no less than 30 days prior to testing, a complete test plan shall be submitted to the AQD Technical Programs Unit and District Office. The AQD must approve the final plan prior to testing. Verification of emission rates includes the submittal of a complete report of the test results to the AQD Technical Programs Unit and District Office within 60 days following the last date of the test. **(R 336.1205, R 336.1702(a), R 336.2001, R 336.2003, R 336.2004, R 336.2803, R 336.2804, R 336.2810, 40 CFR 60.8, 40 CFR 60.4243, 40 CFR 60.4244, 40 CFR 60.4245, 40 CFR Part 60 Subpart JJJJ)**

2. Upon request of the AQD District Supervisor, the permittee shall verify PM10 and VOC emission rates in SC I.4 and I.5 from FGEG by testing at owner's expense, in accordance with Department requirements. No less than 60 days prior to testing, the permittee shall submit a complete test plan to the AQD Technical Programs Unit and District Office. The AQD must approve the final plan prior to testing. Verification of emission rates includes the submittal of a complete report of the test results to the AQD Technical Programs Unit and District Office within 60 days following the last date of the test. **(R 336.1205, R 336.2803, R 336.2804, R 336.2810)**

VI. MONITORING/RECORDKEEPING

Records shall be maintained on file for a period of five years. **(R 336.1201(3))**

1. The permittee shall complete all required calculations in a format acceptable to the AQD District Supervisor by the 30th day of the calendar month, for the previous calendar month, unless otherwise specified in any monitoring/recordkeeping special condition. **(R 336.1205(1)(a) & (3), R 336.1702, R 336.2803, R 336.2804, R 336.2810)**

2. The permittee shall keep, in a satisfactory manner, a record of testing required in SC V.1, SC V.2, or manufacturer certification documentation indicating that each engine in FGEG meets the applicable emission limitations contained in the federal Standards of Performance for New Stationary Sources 40 CFR Part 60 Subpart JJJJ. The permittee shall keep all records on file and make them available to the Department upon request. **(40 CFR 60.4245)**

3. The permittee shall monitor and record the hours of operation of each engine in FGEG during emergencies and non-emergencies, on a monthly, 12-month rolling, and calendar year basis, in a manner acceptable to the District Supervisor, Air Quality Division. The permittee shall record the time of operation of each engine in FGEG and the reason it was in operation during that time. **(R 336.1205(1)(a) & (3), 40 CFR 60.4243)**

VII. REPORTING

1. Except as provided in R 336.1285, if any engine included in FGEG is replaced with an equivalent-emitting or lower-emitting engine, the permittee shall notify the AQD District Supervisor of such change-out and submit acceptable emissions data to show that the alternate engine is equivalent-emitting or lower-emitting. The data shall be submitted within 30-days of the engine change out. **(R 336.1205, R 336.1702(a), R 336.1911, R 336.2803, R 336.2804, R 336.2810)**

2. The permittee shall submit the following notifications if any engine included in FGEG is contractually obligated to be available for more than 15 hours per calendar year for the purposes specified in 40 CFR 60.4243(d)(3)(i) the permittee must submit and annual report including the following:
   a) The company name and address where the engine is located;
   b) Date of the report and beginning and ending dates of the reporting period;
   c) Engine site rating and model year;
   d) Latitude and longitude of the engine in decimal degrees reported to the fifth decimal place;
   e) Hours spent for operation for the purposes specified in §60.4243(d)(3)(i), including the date, start time, and end time for engine operation for the purposes specified in §60.4243(d)(3)(i). The report must also identify the entity that dispatched the engine and the situation that necessitated the dispatch of the engine;

   (40 CFR 60.4245(e), 40 CFR Part 60 Subparts A and JJJJ)

3. The permittee shall submit a notification specifying whether each engine included in FGEG will be operated in a certified or a non-certified manner to the AQD District Supervisor, in writing, within 30 days following the initial startup of the engine and within 30 days of switching the manner of operation. **(R 336.1201(3))**

VIII. STACK/VENT RESTRICTION(S)

The exhaust gases from the stacks listed in the table below shall be discharged unobstructed vertically upwards to the ambient air unless otherwise noted:

Stack & Vent ID	Maximum Exhaust Diameter / Dimensions (inches)	Minimum Height Above Ground (feet)	Underlying Applicable Requirements
1. SVEG1	6	10	R 336.1225, R 336.2803, R 336.2804
2. SVEG2	10	10	R 336.1225, R 336.2803, R 336.2804

IX. OTHER REQUIREMENT(S)

1. The permittee shall comply with the provisions of the federal Standards of Performance for New Stationary Sources as specified in 40 CFR Part 60 Subpart A and Subpart JJJJ, as they apply to FGEG. **(40 CFR Part 60 Subparts A & JJJJ, 40 CFR 63.6590)**

3. The permittee shall comply with the provisions of the National Emission Standards for Hazardous Air Pollutants, as specified in 40 CFR, Part 63, Subpart A and Subpart ZZZZ, as they apply to FGEG, upon startup. **(40 CFR Part 63 Subparts A and ZZZZ, 40 CFR 63.6595)**

Footnotes:
[1] This condition is state only enforceable and was established pursuant to Rule 201(1)(b).

FGMACTZZZZZ
FLEXIBLE GROUP CONDITIONS

DESCRIPTION

The new affected source is a new iron foundry, that is (or is part of) an area source of hazardous air pollutant (HAP) emissions. The annual metal melting capacity is greater than 10,000 tons, therefore this area source is a large foundry.

Emission Unit: EUCHRGHAND, EUDUCTINOC, EUMLTXFER, EUEIF1, EUEIF2, EUEIF3, EUEIF4, EULMLPC, EULMLSO, EU1230PC, EU1230SO, EUSHMM, EUBLAST, EUGRIND, EUDIPTANK, EUPUNBCM, EUSHELLCM, EUCOREWASH, EUCORERELEASE, EULDLREPAIR, EUWASTESAND, EUMUAGEN, EUHTRFDRYOFF, EUHTRSUPPOFF, EUHTROILBLD, EUINFARED, EUBOILERS, EUFNCHEAT, EULDLHEAT, EULDLREPAIRHTR, EUDUCTHTRS, EUDIPTANKHTR, EUDIPCUREOVEN, EUPUNBBOILER, EUSCALEPITBOILER, EUSHELLHEATERS

POLLUTION CONTROL EQUIPMENT

Fabric filter collector (baghouse) control. (Baghouses A, B)

I. EMISSION LIMIT(S)

Pollutant	Limit	Time Period / Operating Scenario	Equipment	Monitoring / Testing Method	Underlying Applicable Requirements
1. VE (fugitive emissions from foundry operations)	20 percent opacity 6-min average, except for one 6-min average per hour that does not exceed 30 percent	Hourly	Each Building or Structure Housing any Iron or Steel Foundry Emission Source at FGMACTZZZZZ	SC V.2	40CFR 63.10895 (e)
3. PM ---OR--- Total Metal HAP	0.1 pounds of PM per ton of metal charged ---OR--- 0.008 pounds of total metal HAP per ton of metal charged.	Hourly	EUEIF1 EUEIF2 EUEIF3 EUEIF4 each furnace	SC V.1	40CFR 63.10895 (c)(2)

II. MATERIAL LIMIT(S)

1. If applicable, the permittee shall not utilize a binder chemical formulation that uses methanol as a specific ingredient of the catalyst formulation for a warm box mold or core making line. This requirement does not apply to the resin portion of the binder system. **(40 CFR 63.10886)**

2. The permittee will not accept motor vehicle scrap. The permittee must certify in your notification of compliance status and maintain records of documentation that this scrap does not contain motor vehicle scrap. **(40 CFR 63.10885(b)(4))**

III. PROCESS/OPERATIONAL RESTRICTION(S)

1. For each segregated metallic scrap storage area, bin or pile, the permittee must comply with the materials acquisition requirements in described in 40 CFR 63.10885(a). The permittee must keep a copy of the material specifications onsite and readily available to all personnel with material acquisition duties, and provide a copy to each of your scrap providers. **(40 CFR 63.10885(a))**
   a) The permittee must prepare and operate at all times according to written material specifications for the purchase and use of only metal ingots, pig iron, slitter, or other materials that do not include post-consumer automotive body scrap, post-consumer engine blocks, post-consumer oil filters, oily turnings, lead components, chlorinated plastics, or free liquids. "Free liquids" is defined as material that fails the paint filter test by EPA Method 9095B, "Paint Filter Liquids Test" (revision 2), November 2004 (incorporated by reference—see §63.14). The requirements for no free liquids do not apply if the owner or operator can demonstrate that the free liquid is water that resulted from scrap exposure to rain. **(40 CFR 63.10885(a)(1))**
   b) The permittee must prepare and operate at all times according to written material specifications for the purchase and use of only iron and steel scrap that has been depleted (to the extent practicable) of organics and HAP metals in the charge materials used by the iron and steel foundry. The materials specifications must include at minimum: **(40 CFR 63.10885(a)(2))**
      i. Specifications for metallic scrap materials charged to a scrap preheater or metal melting furnace to be depleted (to the extent practicable) of the presence of used oil filters, chlorinated plastic parts, accessible lead-containing components (such as batteries and wheel weights), and a program to ensure the scrap materials are drained of free liquids. **(40 CFR 63.10885(a)(2)(i))**

2. The permittee must prepare and operate at all times according to a written operation and maintenance (O&M) plan for each control device for an emissions source subject to a PM, metal HAP, or opacity emissions limit in §63.10895. The permittee must maintain a copy of the O&M plan at the facility and make it available for review upon request. At a minimum, each plan must contain the following information **(40 CFR 63.10896(a)):**
   a) General facility and contact information;
   b) Positions responsible for inspecting, maintaining, and repairing emissions control devices which are used to comply with this subpart;
   c) Description of items, equipment, and conditions that will be inspected, including an inspection schedule for the items, equipment, and conditions. For baghouses that are equipped with bag leak detection systems, the O&M plan must include the site-specific monitoring plan required in 40 CFR 63.10897(d)(2).
   d) Identity and estimated quantity of the replacement parts that will be maintained in inventory; and
   e) For a new affected source, procedures for operating and maintaining a CPMS in accordance with manufacturer's specifications.

3. The permittee must install, operate, and maintain a bag leak detection system for each negative pressure baghouse or positive pressure baghouse on melting. The permittee must install, operate, and maintain each bag leak detection system according to the requirements listed in paragraphs (d)(1) through (3) of 40 CFR 63.10897. **(40 CFR 63.10897(d))**

4. The permittee must make monthly inspections of the equipment that is important to the performance of the total capture system (i.e., pressure sensors, dampers, and damper switches). This inspection must include observations of the physical appearance of the equipment (e.g., presence of holes in the ductwork or hoods, flow constrictions caused by dents or accumulated dust in the ductwork, and fan erosion). The permittee must repair any defect or deficiency in the capture system as soon as practicable, but no later than 90 days. You must record the date and results of each inspection and the date of repair of any defect or deficiency. **(40 CFR 63.10897(e))**

5. The permittee must install, operate, and maintain each CPMS or other measurement device according to your O&M plan. You must record all information needed to document conformance with these requirements. **(40 CFR 63.10897(f))**

6. In the event of an exceedance of an established emissions limitation (including an operating limit), the permittee must restore operation of the emissions source (including the control device and associated capture system) to its normal or usual manner or operation as expeditiously as practicable in accordance with good air pollution control practices for minimizing emissions. The response shall include minimizing the period of any startup, shutdown or malfunction and taking any necessary corrective actions to restore normal operation and prevent the likely recurrence of the exceedance. The permittee must record the date and time correction action was initiated, the correction action taken, and the date corrective action was completed. **(40 CFR 63.10897(g))**

7. If you choose to comply with an emissions limit in §63.10895(c) using emissions averaging, the permittee must calculate and record for each calendar month the pounds of PM or total metal HAP per ton of Metal Charged from the group of all metal melting furnaces at your foundry. The permittee must calculate and record the weighted average pounds per ton emissions rate for the group of all metal melting furnaces at the foundry determined from the performance test procedures in §63.10898(d) and (e). **(40 CFR 63.10897(h))**

IV. DESIGN/EQUIPMENT PARAMETER(S)

1. The permittee must operate a capture and collection system for each metal melting furnace at a new or existing iron and steel foundry unless that furnace is specifically uncontrolled as part of an emissions averaging group. Each capture and collection system must meet accepted engineering standards, such as those published by the American Conference of Governmental Industrial Hygienists. **(40 CFR 63.10895(b))**

V. TESTING/SAMPLING

Records shall be maintained on file for a period of five years. **(R 336.1201(3))**

1. The permittee shall conduct subsequent performance tests to demonstrate compliance with all applicable PM or total metal HAP emissions limits in 40 CFR 63.10895 for a metal melting furnace or group of all metal melting furnaces no less frequently than every 5 years and each time the permittee elects to change an operating limit or make a process change likely to increase HAP emissions. The permittee shall conduct the performance tests as specified in Table 1 of 40 CFR Part 63 Subpart ZZZZZ. No less than 60 days prior to testing, the permittee shall submit a complete test plan to the AQD Technical Programs Unit and District Office. The AQD must approve the final plan prior to testing. Verification of emission rates includes the submittal of a complete report of the test results to the AQD Technical Programs Unit and District Office within 60 days following the last date of the test. **(40 CFR 63.10898)**

2. The permittee shall conduct each opacity test for fugitive emissions according to the requirements in §63.6(h)(5) and Table 1 of 40 CFR Part 63 Subpart ZZZZZ. The permittee shall conduct subsequent performance tests to demonstrate compliance with the opacity limit in §63.10895 no less frequently than every 6 months and each time the permittee makes a process change likely to increase fugitive emissions. The AQD must approve the final plan prior to testing. Verification of emission rates includes the submittal of a complete report of the test results to the AQD Technical Programs Unit and District Office within 60 days following the last date of the test.
(40 CFR 63.10898)

VI. MONITORING/RECORDKEEPING

Records shall be maintained on file for a period of five years. **(R 336.1201(3))**

1. The permittee must maintain files of all information (including all reports and notifications) for at least 5 years following the date of each occurrence, measurement, maintenance, corrective action, report, or record. At a minimum, the most recent 2 years of data shall be retained on site. The remaining 3 years of data may be retained off site. Such files may be maintained on microfilm, on a computer, on computer floppy disks, on magnetic tape disks, or on microfiche. **(40 CFR 63.10899(a))**

2. In addition to the records required by 40 CFR 63.10, the permittee must keep records of the information as specified below **(40 CFR 63.10899(b)):**
   a) The permittee must keep records of your written materials specifications according to 40 CFR 63.10885(a) and records that demonstrate compliance with the requirements for restricted metallic scrap in 40 CFR 63.10885(a)(1) and/or for the use of general scrap in 40 CFR 63.10885(a)(2) and for mercury in 40 CFR 63.10885(b)(1) through (3), as applicable. You must keep records documenting compliance with 40 CFR 63.10885(b)(4) for scrap that does not contain motor vehicle scrap. **(40 CFR 63.10899(b)(1))**
   b) If the permittee is subject to the requirements for a site-specific plan for mercury under 40 CFR 63.10885(b)(1), you must (40 CFR 63.10899(b)(2)):
      i. Maintain records of the number of mercury switches removed or the weight of mercury recovered from the switches and properly managed, the estimated number of vehicles processed, and an estimate of the percent of mercury switches recovered; and
      ii. Submit semiannual reports of the number of mercury switches removed or the weight of mercury recovered from the switches and properly managed, the estimated number of vehicles processed, an estimate of the percent of mercury switches recovered, and a certification that the recovered mercury switches were recycled at RCRA-permitted facilities. The semiannual reports must include a certification that you have conducted periodic inspections or taken other means of corroboration as required under 40 CFR 63.10885(b)(1)(ii)(C). You must identify which option in 40 CFR 63.10885(b) applies to each scrap provider, contract, or shipment. You may include this information in the semiannual compliance reports required under paragraph (c) of this section.
   c) If the permittee is subject to the option for approved mercury programs under 40 CFR63.10885(b)(2), you must maintain records identifying each scrap provider and documenting the scrap provider's participation in an approved mercury switch removal program. If your scrap provider is a broker, you must maintain records identifying each of the broker's scrap suppliers and documenting the scrap supplier's participation in an approved mercury switch removal program. **(40 CFR 63.10899(b)(3))**
   d) The permittee must keep records to document use of any binder chemical formulation that does not contain methanol as a specific ingredient of the catalyst formulation for each furfuryl alcohol warm box mold or core making line as required by 40 CFR 63.10886. These records must be the Material Safety Data Sheet (provided that it contains appropriate information), a certified product data sheet, or a manufacturer's hazardous air pollutant data sheet. **(40 CFR 63.10899(b)(4))**
   e) The permittee must keep records of the annual quantity and composition of each HAP-containing chemical binder or coating material used to make molds and cores. These records must be copies of purchasing records, Material Safety Data Sheets, or other documentation that provide information on the binder or coating materials used. **(40 CFR 63.10899(b)(5))**
   f) The permittee must keep records of monthly metal melt production for each calendar year. **(40 CFR 63.10899(b)(6))**
   g) The permittee must keep a copy of the operation and maintenance plan as required by 40 CFR 63.10896(a) and records that demonstrate compliance with plan requirements. **(40 CFR 63.10899(b)(7))**
   h) If you use emissions averaging, the permittee must keep records of the monthly metal melting rate for each furnace at your iron and steel foundry, and records of the calculated pounds of PM or total metal HAP per ton of Metal Charged for the group of all metal melting furnaces required by §63.10897(h). **(40 CFR 63.10899(b)(8))**
   i) If applicable, the permittee must keep records for bag leak detection systems as follows **(40 CFR 63.10899(b)(9)):**
      i. Records of the bag leak detection system output;
      ii. Records of bag leak detection system adjustments, including the date and time of the adjustment, the initial bag leak detection system settings, and the final bag leak detection system settings; and
      iii. The date and time of all bag leak detection system alarms, and for each valid alarm, the time you initiated corrective action, the corrective action taken, and the date on which corrective action was completed.
   j) The permittee must keep records of capture system inspections and repairs as required by 40 CFR 63.10897(e). **(40 CFR 63.10899(b)(10))**
   k) The permittee must keep records demonstrating conformance with your specifications for the operation of CPMS as required by 40 CFR 63.10897(f). **(40 CFR 63.10899(b)(11))**
   l) The permittee must keep records of corrective action(s) for exceedances and excursions as required by 40 CFR 63.10897(g). **(40 CFR 63.10899(b)(12))**

m) The permittee must record the results of each inspection and maintenance required by 40 CFR 63.10897(a) for PM control devices in a logbook (written or electronic format). The permittee must keep the logbook onsite and make the logbook available to the Administrator upon request. You must keep records of the information specified below **(40 CFR 63.10899(b)(13)):**
   i. The date and time of each recorded action for a fabric filter, the results of each inspection, and the results of any maintenance performed on the bag filters.
   ii. The date and time of each recorded action for a wet or dry electrostatic precipitator (including ductwork), the results of each inspection, and the results of any maintenance performed for the electrostatic precipitator.
   iii. The date and time of each recorded action for a wet scrubber (including ductwork), the results of each inspection, and the results of any maintenance performed on the wet scrubber.

VII. REPORTING

1. The permittee must submit semiannual compliance reports to the Administrator according to the requirements in 40 CFR 63.10(e). The reports must include, at a minimum, the following information as applicable **(40 CFR 63.10899(c)):**
   a) Summary information on the number, duration, and cause (including unknown cause, if applicable) of excursions or exceedances, as applicable, and the corrective action taken;
   b) Summary information on the number, duration, and cause (including unknown cause, if applicable) for monitor downtime incidents (other than downtime associated with zero and span or other calibration checks, if applicable); and
   c) Summary information on any deviation from the pollution prevention management practices in 40 CFR 63.10885 and 40 CFR 63.10886 and the operation and maintenance requirements 40 CFR 63.10896 and the corrective action taken.

VIII. STACK/VENT RESTRICTION(S)

NA

IX. OTHER REQUIREMENT(S)

NA

Footnotes:
[1] This condition is state only enforceable and was established pursuant to Rule 201(1)(b).

FGFACILITY CONDITIONS

DESCRIPTION: The following conditions apply source-wide to all process equipment including equipment covered by other permits, grand-fathered equipment and exempt equipment.

POLLUTION CONTROL EQUIPMENT

Fabric filter collector (baghouse) control. (Baghouses A, B, C, D, E, F, G, H, J, K, L)

I. EMISSION LIMIT(S)

Pollutant	Limit	Time Period/ Operating Scenario	Equipment	Monitoring/ Testing Method	Underlying Applicable Requirements
1. VOC	1.80 lb/ton metal charged	Hourly	FGFACILITY	SC V.1	R 336.1205(1)(a) and (3) R 336.2810
2. CO	8.45 lb/ton metal charged	Hourly	FGFACILITY	SC V.1	R 336.1205(1)(a) and (3) R 336.2810
3. Each Individual HAP	Less than 9.9 tpy	12-month rolling time period as determined at the end of each calendar month	FGFACILITY	SC VI.3	R 336.1205(1)(a)
4. Aggregate HAPs	Less than 24.9 tpy	12-month rolling time period as determined at the end of each calendar month	FGFACILITY	SC VI.3	R 336.1205(1)(a)
5. PM/PM10/ PM2.5	0.002 gr/dscf	Hourly	Baghouses A and B combined	SC V.1	R 336.1331(1)(c) R 336.2804
6. PM	2.726 pph	Hourly	Baghouses A and B combined	SC V.1	R 336.2803 R 336.2804 R 336.2810
7. PM10	2.726 pph	Hourly	Baghouses A and B combined	SC V.1	R 336.2803 R 336.2804 R 336.2810
8. PM2.5	2.726 pph	Hourly	Baghouses A and B combined	SC V.1	R 336.2803 R 336.2804 R 336.2810
9. PM/PM10/ PM2.5	0.0015 gr/dscf	Hourly	Baghouse C	SC V.1	R 336.1331(1)(c) R 336.2804
10. PM	1.278 pph	Hourly	Baghouse C	SC V.1	R 336.2803 R 336.2804 R 336.2810
11. PM10	1.278 pph	Hourly	Baghouse C	SC V.1	R 336.2803 R 336.2804 R 336.2810
12. PM2.5	1.278 pph	Hourly	Baghouse C	SC V.1	R 336.2803 R 336.2804 R 336.2810
13. PM/PM10/ PM2.5	0.002 gr/dscf	Hourly	Baghouse D	SC V.1	R 336.1331(1)(c) R 336.2804
14. PM	1.363 pph	Hourly	Baghouse D	SC V.1	R 336.2803 R 336.2804 R 336.2810

Pollutant	Limit	Time Period/ Operating Scenario	Equipment	Monitoring/ Testing Method	Underlying Applicable Requirements
15. PM10	1.363 pph	Hourly	Baghouse D	SC V.1	R 336.2803 R 336.2804 R 336.2810
16. PM2.5	1.363 pph	Hourly	Baghouse D	SC V.1	R 336.2803 R 336.2804 R 336.2810
17. PM/PM10/ PM2.5	0.002 gr/dscf	Hourly	Baghouse E	SC V.1	R 336.1331(1)(c) R 336.2804
18. PM	1.038 pph	Hourly	Baghouse E	SC V.1	R 336.2803 R 336.2804 R 336.2810
19. PM10	1.038 pph	Hourly	Baghouse E	SC V.1	R 336.2803 R 336.2804 R 336.2810
20. PM2.5	1.038 pph	Hourly	Baghouse E	SC V.1	R 336.2803 R 336.2804 R 336.2810
21. PM/PM10/ PM2.5	0.002 gr/dscf	Hourly	Baghouse F	SC V.1	R 336.1331(1)(c) R 336.2804
22. PM	1.038 pph	Hourly	Baghouse F	SC V.1	R 336.2803 R 336.2804 R 336.2810
23. PM10	1.038 pph	Hourly	Baghouse F	SC V.1	R 336.2803 R 336.2804 R 336.2810
24. PM2.5	1.038 pph	Hourly	Baghouse F	SC V.1	R 336.2803 R 336.2804 R 336.2810
25. PM/PM10/ PM2.5	0.002 gr/dscf	Hourly	Baghouse G	SC V.1	R 336.1331(1)(c) R 336.2804
26. PM	0.681 pph	Hourly	Baghouse G	SC V.1	R 336.2803 R 336.2804 R 336.2810
27. PM10	0.681 pph	Hourly	Baghouse G	SC V.1	R 336.2803 R 336.2804 R 336.2810
28. PM2.5	0.681 pph	Hourly	Baghouse G	SC V.1	R 336.2803 R 336.2804 R 336.2810
29. PM/PM10/ PM2.5	0.001 gr/dscf	Hourly	Baghouses H and J combined	SC V.1	R 336.1331(1)(c) R 336.2804
30. PM	1.704 pph	Hourly	Baghouses H and J combined	SC V.1	R 336.2803 R 336.2804 R 336.2810
31. PM10	1.704 pph	Hourly	Baghouses H and J combined	SC V.1	R 336.2803 R 336.2804 R 336.2810
32. PM2.5	1.704 pph	Hourly	Baghouses H and J combined	SC V.1	R 336.2803 R 336.2804 R 336.2810
33. PM/PM10/ PM2.5	0.002 gr/dscf	Hourly	Baghouse K	SC V.1	R 336.1331(1)(c) R 336.2804

Pollutant	Limit	Time Period/ Operating Scenario	Equipment	Monitoring/ Testing Method	Underlying Applicable Requirements
34. PM	0.341 pph	Hourly	Baghouse K	SC V.1	R 336.2803 R 336.2804 R 336.2810
35. PM10	0.341 pph	Hourly	Baghouse K	SC V.1	R 336.2803 R 336.2804 R 336.2810
36. PM2.5	0.341 pph	Hourly	Baghouse K	SC V.1	R 336.2803 R 336.2804 R 336.2810
37. PM/PM10/ PM2.5	0.002 gr/dscf	Hourly	Baghouse L	SC V.1	R 336.1331(1)(c) R 336.2804
38. PM	0.341 pph	Hourly	Baghouse L	SC V.1	R 336.2803 R 336.2804 R 336.2810
39. PM10	0.341 pph	Hourly	Baghouse L	SC V.1	R 336.2803 R 336.2804 R 336.2810
40. PM2.5	0.341 pph	Hourly	Baghouse L	SC V.1	R 336.2803 R 336.2804 R 336.2810

II. MATERIAL LIMIT(S)

Material	Limit	Time Period / Operating Scenario	Equipment	Monitoring / Testing Method	Underlying Applicable Requirements
1. Metal Charged	128,000 tons per year	12-month rolling time period as determined at the end of each calendar month	FGFACILITY	SC VI.2	R 336.1205(1)(b) R 336.1205(3) R 336.2803 R 336.2804 R 336.2810
2. Sand Processed	1,920,000 tons per year	12-month rolling time period as determined at the end of each calendar month	FGFACILITY	SC VI.2	R 336.1205(1)(b) R 336.1205(3) R 336.2803 R 336.2804 R 336.2810
3. Resin Binder/Catalyst Processed	50 tons per year	12-month rolling time period as determined at the end of each calendar month	FGFACILITY	SC VI.2	R 336.1205(1)(b) R 336.1205(3) R 336.1702 R 336.2803 R 336.2804 R 336.2810

III. PROCESS/OPERATIONAL RESTRICTION(S)

1. The permittee shall not operate FGFACILITY unless a malfunction abatement plan (MAP) as described in Rule 911(2), for FGFACILITY, has been submitted within 60 days of permit issuance, and is implemented and maintained. The MAP shall, at a minimum, specify the following:
   a) A complete preventative maintenance program including identification of the supervisory personnel responsible for overseeing the inspection, maintenance, and repair of air-cleaning devices, a description of the items or conditions that shall be inspected, the frequency of the inspections or repairs, and an identification of the major replacement parts that shall be maintained in inventory for quick replacement.
   b) An identification of the source and air-cleaning device operating variables that shall be monitored to detect a malfunction or failure, the normal operating range of these variables, and a description of the method of monitoring or surveillance procedures.
   c) A description of the corrective procedures or operational changes that shall be taken in the event of a malfunction or failure to achieve compliance with the applicable emission limits.

   If at any time the MAP fails to address or inadequately addresses an event that meets the characteristics of a malfunction, the permittee shall amend the MAP within 45 days after such an event occurs. The permittee shall also amend the MAP within 45 days, if new equipment is installed or upon request from the District Supervisor. The permittee shall submit the MAP and any amendments to the MAP to the AQD District Supervisor for review and approval. If the AQD does not notify the permittee within 90 days of submittal, the MAP or amended MAP shall be considered approved. Until an amended plan is approved, the permittee shall implement corrective procedures or operational changes to achieve compliance with all applicable emission limits. **(R 336.1331, R 336.1910, R 336.1911, R 336.2803, R 336.2804, R 336.2810)**

2. The permittee shall not operate FGFACILITY unless the fugitive dust control plan for all plant roadways, the plant yard, all material storage piles, and all material handling operations, attached as Appendix A, is implemented and maintained. **(R 336.1371, R 336.1372, Act 451 324.5524, R 336.2803, R 336.2804, R 336.2810)**

3. The permittee shall not operate FGFACILITY for more than 6,000 hours per 12-month rolling time period as determined at the end of each calendar month. **(R 336.1224, R 336.1225, R 336.1702, R 336.2803, R 336.2804, R 336.2810)**

IV. DESIGN/EQUIPMENT PARAMETER(S)

NA

V. TESTING/SAMPLING

Records shall be maintained on file for a period of five years. **(R 336.1201(3))**

1. Every five years the permittee shall verify PM, PM10, and PM2.5 emission rates and CO and VOC emission rates as applicable, from each baghouse stack listed in FGFACILITY (SVAB-BH, SVC-BH, SVD-BH, SVE-BH, SVF-BH, SVG-BH, SVHJ-BH, SVK-BH, SVL-BH) by testing at owner's expense, in accordance with Department requirements. No less than 60 days prior to testing, the permittee shall submit a complete test plan to the AQD Technical Programs Unit and District Office. The AQD must approve the final plan prior to testing. Verification of emission rates includes the submittal of a complete report of the test results to the AQD Technical Programs Unit and District Office within 60 days following the last date of the test. **(R 336.1205, R 336.2803, R 336.2804, R 336.2810)**

2. The permittee shall perform and record the results of a non-certified visible emission check on all of the emission points from FGFACILITY at least once per calendar day during routine operating conditions. The visible emission check shall simply verify the presence of visible emissions and need not follow the procedures specified in Federal Reference Test Method 9. Therefore, multiple stacks may be observed simultaneously. Each visible emission check shall be taken during routine operating conditions and be a minimum of 6 minutes. If visible emissions are observed, the permittee shall immediately initiate corrective actions and document the corrective actions taken. **(R 336.1201(3))**

VI. MONITORING/RECORDKEEPING

Records shall be maintained on file for a period of five years. **(R 336.1201(3))**

1. The permittee shall complete all required calculations in a format acceptable to the AQD District Supervisor by the 30th day of the calendar month, for the previous calendar month, unless otherwise specified in any monitoring/recordkeeping special condition. **(R 336.1205(3), R 336.1702, R 336.2803, R 336.2804, R 336.2810)**

2. The permittee shall keep the following information on a monthly basis for FGFACILITY:
   a) Total Metal Charged, tons/year, based upon a 12-month rolling time period as determined at the end of each calendar month.
   b) Lake sand processed, tons/year, based upon a 12-month rolling time period as determined at the end of each calendar month.
   c) Resin binder/catalyst processed, tons/year, based upon a 12-month rolling time period as determined at the end of each calendar month.
   d) Natural gas usage, cubic foot/year, based upon a 12-month rolling time period as determined at the end of each calendar month.
   e) Hours of operation for FGFACILITY based upon a 12-month rolling time period as determined at the end of each calendar month.
   f) CO and VOC emission calculations determining the emission rates in lb per ton of metal charged.
   g) Individual and aggregate HAP emission calculations determining the monthly emission rate of each in tons per calendar month.
   h) Individual and aggregate HAP emission calculations determining the annual emission rate of each in tons per 12-month rolling time period as determined at the end of each calendar month.

   The permittee shall keep the records on file at the facility, in a format acceptable to the AQD District Supervisor, for a period of at least five years and make them available to the Department upon request. **(R336.1205(1)(b),R 336.1702, R 336.2803, R 336.2804, R 336.2810)**

3. The permittee shall maintain records of all information necessary to demonstrate compliance with the emission limits of this permit, including records of visible emissions observations required in SC V.2. **(R 336.1205(1)(a)&(b), R 336.1225, R 336.1331(c))**

VII. REPORTING

NA

VIII. STACK/VENT RESTRICTION(S)

The exhaust gases from the stacks listed in the table below shall be discharged unobstructed vertically upwards to the ambient air unless otherwise noted:

Stack & Vent ID	Maximum Exhaust Diameter (inches)	Minimum Height Above Ground (feet)	Underlying Applicable Requirements
1. SVAB-BH	101.4	110	R 336.1225, R 336.2803, R 336.2804
2. SVC-BH	80.2	155	R 336.1225, R 336.2803, R 336.2804
3. SVD-BH	71.6	155	R 336.1225, R 336.2803, R 336.2804
4. SVE-BH	63	155	R 336.1225, R 336.2803, R 336.2804
5. SVF-BH	63	155	R 336.1225, R 336.2803, R 336.2804
6. SVG-BH	50.8	135	R 336.1225, R 336.2803, R 336.2804
7. SVHJ-BH	113.3	110	R 336.1225, R 336.2803, R 336.2804

Stack & Vent ID	Maximum Exhaust Diameter (inches)	Minimum Height Above Ground (feet)	Underlying Applicable Requirements
8. SVK-BH	36	65	R 336.1225, R 336.2803, R 336.2804
9. SVL-BH	36	65	R 336.1225, R 336.2803, R 336.2804

IX. OTHER REQUIREMENT(S)

NA

Footnotes:
[1] This condition is state only enforceable and was established pursuant to Rule 201(1)(b).

Appendix A

FUGITIVE DUST CONTROL PLAN

PURPOSE: This plan provides dust control strategies for the areas adjacent to and associated with the equipment operations. Regarding truck loads (item 3.), large metal items, either incoming scrap metal or outgoing products are unlikely sources of fugitive dust and covered loads are not mandatory.

1. SITE MAINTENANCE

a. Dust on all areas where vehicular traffic will travel shall be controlled by the application of water, sweeping, vacuuming, or other acceptable dust control method. This will occur a minimum of two times per month or more frequently as dictated by weather conditions and vehicular activity. The dust control method shall be acceptable as determined by the District Supervisor.

b. The speed of vehicles on the site will be limited to 10 miles per hour or less. Signs will be posted to advise drivers of the speed limitation.

2. MANAGEMENT OF ON-SITE ROADWAYS

a. All the roadways on which the haul vehicles will travel are paved.

b. The paved plant roads shall be controlled by the application of water, sweeping, vacuuming, or other acceptable dust control method that minimizes the introduction of the dust to the ambient air to control fugitive dust emissions and track-out dust. This will occur a minimum of two times per month or more frequently as dictated by weather conditions and vehicular activity. The dust control method shall be acceptable as determined by the District Supervisor.

3. ON-SITE MANAGEMENT OF HAUL VEHICLES

a. INCOMING TRUCKS: Trucks entering the site shall control fugitive dust from the loads as needed.

b. OUT-GOING TRUCKS: All trucks leaving the site shall control fugitive dust from the loads as needed prior to leaving the site. A sign shall be posted to advise drivers of this requirement.

4. MANAGEMENT OF FRONT-END LOADER OPERATIONS

If a loader is used, the front-end loader operator shall be directed to minimize the drop height of the material.

5. RECORDKEEPING

Records of dust control activities on travel surfaces and other surfaces where fugitive dust emissions occur shall be kept on file and made available to EGLE staff upon request. The records will indicate the date, time, what was observed or the reason for the dust control activity (routine or other), and what action was taken.

6. FUGITIVE EMISSIONS FROM PROCESS EQUIPMENT AND FABRIC FILTER DUST COLLECTOR

Any fugitive emissions from leak(s) and malfunction(s) from any transfer system, storage bin, mixer, hopper, or fabric filter dust collector shall be immediately corrected to prevent further fugitive emissions.

Michigan Department of Environment, Great Lakes, and Energy - Air Quality Division

EGLE

RENEWABLE OPERATING PERMIT APPLICATION
AI-001: ADDITIONAL INFORMATION

This information is required by Article II, Chapter 1, Part 55 (Air Pollution Control) of P.A. 451 of 1994, as amended, and the Federal Clean Air Act of 1990. Failure to obtain a permit required by Part 55 may result in penalties and/or imprisonment. Please type or print clearly. Refer to instructions for additional information to complete this form.

	SRN: N6052	Section Number (if applicable):

1. Additional Information ID
AI-EU-003(2)

Additional Information

2. Is This Information Confidential? ☐ Yes ☒ No

1. Are you proposing changes to any emission unit names, descriptions or control devices in the PTIs listed above? If Yes, describe the proposed changes on an AI-001 Form.

Yes, EJF would like to change the following emission unit names, to more closely identify with the naming convention used by the facility:

EULMLPC to EUML2PC

EULMLSO to EUML2SO

EU1230PC to EUML1PC

EU1230SO to EUML1SO

EGLE

RENEWABLE OPERATING PERMIT INITIAL APPLICATION
EU-004 OTHER EMISSION UNITS

This information is required by Article II, Chapter 1, Part 55 (Air Pollution Control) of P.A. 451 of 1994, as amended, and the Federal Clean Air Act of 1990. Failure to obtain a permit required by Part 55 may result in penalties and/or imprisonment. Refer to "Renewable Operating Permit Initial Application Instructions" for additional information to complete the application.

SRN: N6052	Section Number (if applicable):

Complete an EU-004 Form for **all** emission units with applicable requirements that have **not** been addressed on an EU-001, EU-002 or EU-003 Form. This would include grandfathered emission units or PTI exempt emission units subject to applicable requirements in the AQD Rules, and emission units subject to a MACT, NESHAP, NSPS, or other federal requirement.

1. Does the source have emission units with applicable requirements that have not been addressed on the EU-001, EU-002 and/or EU-003 Forms? ☐ Yes ☒ No

   If Yes, provide the required information below. Complete the AR-001 and/or AR-002 Form(s) to identify all applicable requirements and all monitoring, testing, recordkeeping and/or reporting to demonstrate compliance with the applicable requirements.

Emission Unit ID **EU-**	Installation Date (MM/DD/YYYY)	Modification/Reconstruction Date(s) (MM/DD/YYYY)	SIC Code – *If different from S-001 Form*
Emission Unit Description – *Include process equipment, control devices, monitoring devices, and all stacks/vents associated with this emission unit that have applicable requirements. Indicate which forms are used to describe/include the applicable requirements for this emission unit (AR-001 and/or AR-002 Forms).*			

Emission Unit ID **EU-**	Installation Date (MM/DD/YYYY)	Modification/Reconstruction Date(s) (MM/DD/YYYY)	SIC Code – *If different from S-001 Form*
Emission Unit Description – *Include process equipment, control devices, monitoring devices, and all stacks/vents associated with this emission unit that have applicable requirements. Indicate which forms are used to describe/include the applicable requirements for this emission unit (AR-001 and/or AR-002 Forms).*			

Emission Unit ID **EU-**	Installation Date (MM/DD/YYYY)	Modification/Reconstruction Date(s) (MM/DD/YYYY)	SIC Code – *If different from S-001 Form*
Emission Unit Description – *Include process equipment, control devices, monitoring devices, and all stacks/vents associated with this emission unit that have applicable requirements. Indicate which forms are used to describe/include the applicable requirements for this emission unit (AR-001 and/or AR-002 Forms).*			

☐ Check if an AI-001 Form is attached to provide more information for EU-004. Enter AI-001 Form ID: **AI-**

EGLE Michigan Department of Environment, Great Lakes, and Energy - Air Quality Division

RENEWABLE OPERATING PERMIT INITIAL APPLICATION
FG-001: FLEXIBLE GROUPS

This information is required by Article II, Chapter 1, Part 55 (Air Pollution Control) of P.A. 451 of 1994, as amended, and the Federal Clean Air Act of 1990. Failure to obtain a permit required by Part 55 may result in penalties and/or imprisonment. Refer to "Renewable Operating Permit Initial Application Instructions" for additional information to complete the application.

SRN: N6052	Section Number (if applicable):

Complete the FG-001 Form for all Emission Units (EUs) that you want to combine into a Flexible Group (FG). Create a descriptive ID for the FG and description, and list the IDs for the EUs to be included in the FG. See instructions for FG examples.

Flexible Group ID **FG-**MELTING			
Flexible Group Description Electric Induction Furnace Melting - Four (4) Electric Induction Furnaces (EIFs) to melt and process chargematerial. The design melt rate is 28 tons per hour and permit requested annual limit of 128,			
Emission Unit IDs			
EU-EIF1	**EU-**EIF2	**EU-**EIF3	**EU-**EIF4
EU-	**EU-**	**EU-**	**EU-**
EU-	**EU-**	**EU-**	**EU-**
EU-	**EU-**	**EU-**	**EU-**
EU-	**EU-**	**EU-**	**EU-**
EU-	**EU-**	**EU-**	**EU-**
EU-	**EU-**	**EU-**	**EU-**

Flexible Group ID **FG-**POURCOOL			
Flexible Group Description The pouring and subsequent cooling of molten metal cast in a sand mold. The mold and casting is subsequently transferred to Shakeout.			
Emission Unit IDs			
EU-LMLPC	**EU-**1230PC	**EU-**	**EU-**
EU-	**EU-**	**EU-**	**EU-**
EU-	**EU-**	**EU-**	**EU-**
EU-	**EU-**	**EU-**	**EU-**
EU-	**EU-**	**EU-**	**EU-**
EU-	**EU-**	**EU-**	**EU-**
EU-	**EU-**	**EU-**	**EU-**
☒ Check if an AI-001 Form is attached to provide more information for FG-001. Enter AI-001 Form ID: **AI-**FG-001(1)			

EGLE

RENEWABLE OPERATING PERMIT APPLICATION
AI-001: ADDITIONAL INFORMATION

This information is required by Article II, Chapter 1, Part 55 (Air Pollution Control) of P.A. 451 of 1994, as amended, and the Federal Clean Air Act of 1990. Failure to obtain a permit required by Part 55 may result in penalties and/or imprisonment. Please type or print clearly. Refer to instructions for additional information to complete this form.

SRN: N6052	Section Number (if applicable):

1. Additional Information ID
AI-FG-001(1)

Additional Information

2. Is This Information Confidential? ☐ Yes ☒ No

The following is in addition to the entries in Form FG-001:FLEXIBLE GROUPS:

Flexible Group ID - FGSHAKEOUT
Flexible Group Description - The separation of mold and core sand from the casting. Sprue is subsequently transferred to Charge Handling, while mold and core sand is discharged to conveyors that are part of Sand Handling and Moldmaking.
Emission Unit IDs - EULMLSO, EU1230SO

Flexible Group ID - FGCORECHEM
Flexible Group Description - The application of a VOC-containing refractory material (slurry) to the core. The core is subsequently ignited (i.e. lightoff) to dry and partially destroy the VOCs. And the application on an "as needed basis" of a material to promote the release of the core from the pattern.
Emission Unit IDs - EUCOREWASH, EUCORERELEASE

Flexible Group ID - FGNATGASUNITS
Flexible Group Description - Various natural gas combustion sources throughout the facility.
Emission Unit IDs - EUMUAGEN, EUHTRFDRYOFF, EUHTRSUPPOFF, EUHTROILBLD, EUINFARED, EUBOILERS, EUFNCHEAT, EULDLHEAT, EULDLREPAIRHTR, EUDUCTHTRS, EUDIPTANKHTR, EUDIPCUREOVEN, EUPUNBBOILER, EUSCALEPITBOILER, EUSHELLHEATERS

Flexible Group ID - FGEG
Flexible Group Description - Two (2) natural gas fired emergency generators rated at 300 kW each.
Emission Unit IDs - EUEG1, EUEG2

Flexible Group ID - FGMACTZZZZZ
Flexible Group Description - All emission units throughout the facility subject to MACT ZZZZZ. This includes all processes related to production.
Emission Unit IDs - MACT EUs

Flexible Group ID - FGFACILITY
Flexible Group Description - All process equipment including equipment covered by other permits, grand-fathered equipment and exempt equipment.
Emission Unit IDs - All emission units

EGLE

RENEWABLE OPERATING PERMIT INITIAL APPLICATION AR-001 APPLICABLE REQUIREMENTS FROM MACT, NESHAP OR NSPS

This information is required by Article II, Chapter 1, Part 55 (Air Pollution Control) of P.A. 451 of 1994, as amended, and the Federal Clean Air Act of 1990. Failure to obtain a permit required by Part 55 may result in penalties and/or imprisonment. Refer to "Renewable Operating Permit Initial Application Instructions" for additional information to complete the application.

SRN: N6052	Proposed Section Number (if applicable):

Answer the question below for emission units subject to a MACT, NESHAP or NSPS regulation and provide either an existing Permit to Install, an existing template table*, or a newly created table** that contains the applicable requirements for each subject emission unit with the application, including associated monitoring, testing, recordkeeping and reporting necessary to demonstrate compliance.

1. Is any emission unit subject to a Maximum Achievable Control Technology (MACT) standard in 40 CFR Part 63, National Emission Standard for Hazardous Air Pollutants (NESHAP) in 40 CFR Part 61, or New Source Performance Standard (NSPS) in 40 CFR Part 60? ☒ Yes ☐ No

   If yes, identify the emission units and applicable MACT, NESHAP or NSPS in the table below.

Note: If several emission units are subject to the same regulation, list all of the emission unit IDs together. Attach the applicable requirements (PTI, template table or newly created table) in the selected format to the application using an AI-001 Form.

MACT NESHAP or NSPS Subpart and Name	**Emission Unit ID** – *Provide the Emission Unit ID you created on the EU-003 or EU-004 Form*	**Applicable Requirements Attached in Which Format?**
NESHAP FOR IRON AND STEEL FOUNDRIES AREA SOURCES	EU-EIF1, EU-EIF2, EU-EIF3, EU-EIF4	☒ PTI No. 185-16A ☐ Template Table* ☐ Newly Created Table**
NESHAP FOR STATIONARY RECIPROCATING INTERNAL COMBUSTION ENGINES	EU-EG1, EU-EG2	☒ PTI No. 185-16A ☐ Template Table* ☐ Newly Created Table**
STANDARDS OF PERFORMANCE FOR STATIONARY SPARK IGNITION INTERNAL COMBUSTION ENGINES	EU-EG1, EU-EG2	☒ PTI No. 185-16A ☐ Template Table* ☐ Newly Created Table**
		☐ PTI No. ☐ Template Table* ☐ Newly Created Table**
		☐ PTI No. ☐ Template Table* ☐ Newly Created Table**

STREAMLINED REQUIREMENTS

2. Are you proposing to streamline any requirements? ☐ Yes ☒ No

   If yes, identify the streamlined and subsumed requirements and provide the EU ID and a justification for streamlining the applicable requirement on an AI-001 Form.

*MACT and NSPS template tables (available at the link below)

**Blank EU or FG template tables (available at the link below)

http://michigan.gov/air (select the Permits Tab, "Renewable Operating Permits(ROP)/Title V", then "ROP Forms & Templates")

☐ Check if an AI-001 Form is attached to provide more information for AR-001. Enter AI-001 Form ID: **AI-**

EGLE

RENEWABLE OPERATING PERMIT INITIAL APPLICATION
AR-002 OTHER APPLICABLE REQUIREMENTS

This information is required by Article II, Chapter 1, Part 55 (Air Pollution Control) of P.A. 451 of 1994, as amended, and the Federal Clean Air Act of 1990. Failure to obtain a permit required by Part 55 may result in penalties and/or imprisonment. Refer to "Renewable Operating Permit Initial Application Instructions" for additional information to complete the application.

SRN: N6052	Section Number (if applicable):

APPLICABLE REQUIREMENTS NOT INCLUDED IN A PTI, MACT, NESHAPS, NSPS, OR PERMIT EXEMPTION

Answer the questions below and create an EU table to identify terms and conditions for each emission unit identified on an EU-004 Form (other than MACT, NESHAP, or NSPS requirements). This would include emission units that are grandfathered or exempt from PTI requirements but subject to state rules, federal rules or consent orders/consent judgments. Blank EU template tables are available on the EGLE Internet at: http://michigan.gov/air (select the Permits Tab, "Renewable Operating Permits (ROP)/Title V", then "ROP Forms & Templates")

1. Is there an emission unit identified on an EU-004 Form that is subject to **emission limit(s)**? If Yes, fill out an EU table to identify the emission limit(s), and provide the EU ID and the source of the applicable requirement below. Do not include requirements identified on an AR-001 Form.	☐ Yes ☒ No
2. Is there an emission unit identified on an EU-004 Form that is subject to **material limit(s)**? If Yes, fill out an EU table to identify the material limit(s), and provide the EU ID and the source of the applicable requirement below. Do not include requirements identified on an AR-001 Form.	☐ Yes ☒ No
3. Is there an emission unit identified on an EU-004 Form that is subject to **process/operational restriction(s)**? If Yes, fill out an EU table to identify the process/operational restriction(s), and provide the EU ID and the source of the applicable requirement below. Do not include requirements identified on an AR-001 Form.	☐ Yes ☒ No
4. Is there an emission unit identified on an EU-004 Form that is subject to **design/equipment parameter(s)**? If Yes, fill out an EU table to identify the design/equipment parameter(s), and provide the EU ID and the source of the applicable requirement below. Do not include requirements identified on an AR-001 Form.	☐ Yes ☒ No

5. Is there an emission unit identified on an EU-004 Form that is subject to **testing/sampling requirement(s)**? If Yes, fill out an EU table to identify the testing/sampling requirement(s), and provide the EU ID and the source of the applicable requirement below. Do not include requirements identified on an AR-001 Form.	☐ Yes ☒ No
6. Is there an emission unit identified on an EU-004 Form that is subject to **monitoring/recordkeeping requirement(s)**? If Yes, fill out an EU table to identify the monitoring/recordkeeping requirement(s), and provide the EU ID and the source of the applicable requirement below. Do not include requirements identified on an AR-001 Form.	☐ Yes ☒ No
7. Is there an emission unit identified on an EU-004 Form that is subject to **reporting requirement(s)**? If Yes, fill out an EU table to identify reporting requirement(s), and provide the EU ID and the source of the applicable requirement below. Do not include requirements identified on an AR-001 Form.	☐ Yes ☒ No
8. Is there an emission unit identified on an EU-004 Form that is subject to **stack/vent restriction(s)**? If Yes, fill out an EU table to identify stack/vent restriction(s), and provide the EU ID and the source of the applicable requirement below. Do not include requirements identified on an AR-001 Form.	☐ Yes ☒ No
9. Are there any other requirements that you would like to **add** for an emission unit identified on an EU-004 Form? If Yes, fill out an EU table to identify the requirements, and provide the EU ID and a justification for the applicable requirement below. Do not include requirements identified on an AR-001 Form.	☐ Yes ☒ No
10. Are you proposing to streamline any requirements? If Yes, identify the streamlined and subsumed requirements and the EU ID, and provide a justification for streamlining the applicable requirement below. Do not include requirements identified on an AR-001 Form.	☐ Yes ☒ No
☐ Check if an AI-001 Form is attached to provide more information for AR-002. Enter AI-001 Form ID: **AI-**	

EGLE

RENEWABLE OPERATING PERMIT INITIAL APPLICATION
AR-003 SOURCE-WIDE APPLICABLE REQUIREMENTS

This information is required by Article II, Chapter 1, Part 55 (Air Pollution Control) of P.A. 451 of 1994, as amended, and the Federal Clean Air Act of 1990. Failure to obtain a permit required by Part 55 may result in penalties and/or imprisonment. Refer to "Renewable Operating Permit Initial Application Instructions" for additional information to complete the application.

SRN: N6052	Section Number (if applicable):

Complete a Source-wide table for any conditions that apply to the entire source. A blank Source-wide template table is available on the EGLE Internet at:
http://michigan.gov/air (select the Permits Tab, "Renewable Operating Permits (ROP)/Title V", then "ROP Forms & Templates")

1. Are there any applicable requirements that apply to the entire source? ☒ Yes ☐ No

   If Yes, identify the conditions by utilizing a Source-wide template table and include all of the appropriate applicable requirements, including associated monitoring, testing, recordkeeping and reporting necessary to demonstrate compliance. Provide information regarding the applicable requirements in the comment field below.

Comments

Source-wide applicable requirements include the following:

1. Facility-wide requirements identified in Flexible Group FGFACILITY of Permit No. 185-16A issued on June 18, 2019 including the requirement to develop a Fugitive Dust Control Plan.

The requirement to implement and maintain a Preventative Maintenance Plan (PMP) has been included in Permit No. 185-16A at the emission unit level.

See AI-AR-003(1) for a source-wide template table including applicable requirements, including associated monitoring, testing, recordkeeping and reporting necessary to demonstrate compliance.

☒ Check if an AI-001 Form is attached to provide more information for AR-003. Enter AI-001 Form ID: **AI-**AR-003(1)

EGLE

RENEWABLE OPERATING PERMIT APPLICATION
AI-001: ADDITIONAL INFORMATION

This information is required by Article II, Chapter 1, Part 55 (Air Pollution Control) of P.A. 451 of 1994, as amended, and the Federal Clean Air Act of 1990. Failure to obtain a permit required by Part 55 may result in penalties and/or imprisonment. Please type or print clearly. Refer to instructions for additional information to complete this form.

	SRN: N6052	Section Number (if applicable):

1. Additional Information ID
AI-AR-003(1)

Additional Information

2. Is This Information Confidential? ☐ Yes ☒ No

See attached for a source-wide template table including applicable requirements, including associated monitoring, testing, recordkeeping and reporting necessary to demonstrate compliance for the following Source-Wide Applicable Requirements:

1. Facility-wide requirements identified in Flexible Group FGFACILITY of Permit No. 185-16A issued on June 18, 2019 including the requirement to develop a Fugitive Dust Control Plan.

DESCRIPTION: The following conditions apply source-wide to all process equipment including equipment covered by other permits, grand-fathered equipment and exempt equipment.

POLLUTION CONTROL EQUIPMENT

Fabric filter collector (baghouse) control. (Baghouses A, B, C, D, E, F, G, H, J, K, L)

A. APPLICABLE REQUIREMENTS

I. EMISSION LIMIT(S)

Pollutant	Limit	Time Period/ Operating Scenario	Equipment	Monitoring/ Testing Method	Underlying Applicable Requirements
1. VOC	1.80 lb/ton metal charged	Hourly	FGFACILITY	SC V.1	R 336.1205(1)(a) and (3) R 336.2810
2. CO	8.45 lb/ton metal charged	Hourly	FGFACILITY	SC V.1	R 336.1205(1)(a) and (3) R 336.2810
3. Each Individual HAP	Less than 9.9 tpy	12-month rolling time period as determined at the end of each calendar month	FGFACILITY	SC VI.3	R 336.1205(1)(a)
4. Aggregate HAPs	Less than 24.9 tpy	12-month rolling time period as determined at the end of each calendar month	FGFACILITY	SC VI.3	R 336.1205(1)(a)
5. PM/PM10/ PM2.5	0.002 gr/dscf	Hourly	Baghouses A and B combined	SC V.1	R 336.1331(1)(c) R 336.2804
6. PM	2.726 pph	Hourly	Baghouses A and B combined	SC V.1	R 336.2803 R 336.2804 R 336.2810
7. PM10	2.726 pph	Hourly	Baghouses A and B combined	SC V.1	R 336.2803 R 336.2804 R 336.2810
8. PM2.5	2.726 pph	Hourly	Baghouses A and B combined	SC V.1	R 336.2803 R 336.2804 R 336.2810
9. PM/PM10/ PM2.5	0.0015 gr/dscf	Hourly	Baghouse C	SC V.1	R 336.1331(1)(c) R 336.2804
10. PM	1.278 pph	Hourly	Baghouse C	SC V.1	R 336.2803 R 336.2804 R 336.2810
11. PM10	1.278 pph	Hourly	Baghouse C	SC V.1	R 336.2803 R 336.2804 R 336.2810
12. PM2.5	1.278 pph	Hourly	Baghouse C	SC V.1	R 336.2803 R 336.2804 R 336.2810
13. PM/PM10/ PM2.5	0.002 gr/dscf	Hourly	Baghouse D	SC V.1	R 336.1331(1)(c) R 336.2804
14. PM	1.363 pph	Hourly	Baghouse D	SC V.1	R 336.2803 R 336.2804 R 336.2810

SUPPLEMENT TO FORM AI-AR-003(1)
SOURCE-WIDE APPLICABLE REQUIREMENTS
TEMPLATE TABLE

Pollutant	Limit	Time Period/ Operating Scenario	Equipment	Monitoring/ Testing Method	Underlying Applicable Requirements
15. PM10	1.363 pph	Hourly	Baghouse D	SC V.1	R 336.2803 R 336.2804 R 336.2810
16. PM2.5	1.363 pph	Hourly	Baghouse D	SC V.1	R 336.2803 R 336.2804 R 336.2810
17. PM/PM10/ PM2.5	0.002 gr/dscf	Hourly	Baghouse E	SC V.1	R 336.1331(1)(c) R 336.2804
18. PM	1.038 pph	Hourly	Baghouse E	SC V.1	R 336.2803 R 336.2804 R 336.2810
19. PM10	1.038 pph	Hourly	Baghouse E	SC V.1	R 336.2803 R 336.2804 R 336.2810
20. PM2.5	1.038 pph	Hourly	Baghouse E	SC V.1	R 336.2803 R 336.2804 R 336.2810
21. PM/PM10/ PM2.5	0.002 gr/dscf	Hourly	Baghouse F	SC V.1	R 336.1331(1)(c) R 336.2804
22. PM	1.038 pph	Hourly	Baghouse F	SC V.1	R 336.2803 R 336.2804 R 336.2810
23. PM10	1.038 pph	Hourly	Baghouse F	SC V.1	R 336.2803 R 336.2804 R 336.2810
24. PM2.5	1.038 pph	Hourly	Baghouse F	SC V.1	R 336.2803 R 336.2804 R 336.2810
25. PM/PM10/ PM2.5	0.002 gr/dscf	Hourly	Baghouse G	SC V.1	R 336.1331(1)(c) R 336.2804
26. PM	0.681 pph	Hourly	Baghouse G	SC V.1	R 336.2803 R 336.2804 R 336.2810
27. PM10	0.681 pph	Hourly	Baghouse G	SC V.1	R 336.2803 R 336.2804 R 336.2810
28. PM2.5	0.681 pph	Hourly	Baghouse G	SC V.1	R 336.2803 R 336.2804 R 336.2810
29. PM/PM10/ PM2.5	0.001 gr/dscf	Hourly	Baghouses H and J combined	SC V.1	R 336.1331(1)(c) R 336.2804
30. PM	1.704 pph	Hourly	Baghouses H and J combined	SC V.1	R 336.2803 R 336.2804 R 336.2810
31. PM10	1.704 pph	Hourly	Baghouses H and J combined	SC V.1	R 336.2803 R 336.2804 R 336.2810
32. PM2.5	1.704 pph	Hourly	Baghouses H and J combined	SC V.1	R 336.2803 R 336.2804 R 336.2810
33. PM/PM10/ PM2.5	0.002 gr/dscf	Hourly	Baghouse K	SC V.1	R 336.1331(1)(c) R 336.2804

Pollutant	Limit	Time Period/ Operating Scenario	Equipment	Monitoring/ Testing Method	Underlying Applicable Requirements
34. PM	0.341 pph	Hourly	Baghouse K	SC V.1	R 336.2803 R 336.2804 R 336.2810
35. PM10	0.341 pph	Hourly	Baghouse K	SC V.1	R 336.2803 R 336.2804 R 336.2810
36. PM2.5	0.341 pph	Hourly	Baghouse K	SC V.1	R 336.2803 R 336.2804 R 336.2810
37. PM/PM10/ PM2.5	0.002 gr/dscf	Hourly	Baghouse L	SC V.1	R 336.1331(1)(c) R 336.2804
38. PM	0.341 pph	Hourly	Baghouse L	SC V.1	R 336.2803 R 336.2804 R 336.2810
39. PM10	0.341 pph	Hourly	Baghouse L	SC V.1	R 336.2803 R 336.2804 R 336.2810
40. PM2.5	0.341 pph	Hourly	Baghouse L	SC V.1	R 336.2803 R 336.2804 R 336.2810

II. MATERIAL LIMIT(S)

Material	Limit	Time Period / Operating Scenario	Equipment	Monitoring / Testing Method	Underlying Applicable Requirements
1. Metal Charged	128,000 tons per year	12-month rolling time period as determined at the end of each calendar month	FGFACILITY	SC VI.2	R 336.1205(1)(b) R 336.1205(3) R 336.2803 R 336.2804 R 336.2810
2. Sand Processed	1,920,000 tons per year	12-month rolling time period as determined at the end of each calendar month	FGFACILITY	SC VI.2	R 336.1205(1)(b) R 336.1205(3) R 336.2803 R 336.2804 R 336.2810
3. Resin Binder/Catalyst Processed	50 tons per year	12-month rolling time period as determined at the end of each calendar month	FGFACILITY	SC VI.2	R 336.1205(1)(b) R 336.1205(3) R 336.1702 R 336.2803 R 336.2804 R 336.2810

III. PROCESS/OPERATIONAL RESTRICTION(S)

1. The permittee shall not operate FGFACILITY unless a malfunction abatement plan (MAP) as described in Rule 911(2), for FGFACILITY, has been submitted within 60 days of permit issuance, and is implemented and maintained. The MAP shall, at a minimum, specify the following:
   a) A complete preventative maintenance program including identification of the supervisory personnel responsible for overseeing the inspection, maintenance, and repair of air-cleaning devices, a description of the items or conditions that shall be inspected, the frequency of the inspections or repairs, and an identification of the major replacement parts that shall be maintained in inventory for quick replacement.
   b) An identification of the source and air-cleaning device operating variables that shall be monitored to detect a malfunction or failure, the normal operating range of these variables, and a description of the method of monitoring or surveillance procedures.
   c) A description of the corrective procedures or operational changes that shall be taken in the event of a malfunction or failure to achieve compliance with the applicable emission limits.

   If at any time the MAP fails to address or inadequately addresses an event that meets the characteristics of a malfunction, the permittee shall amend the MAP within 45 days after such an event occurs. The permittee shall also amend the MAP within 45 days, if new equipment is installed or upon request from the District Supervisor. The permittee shall submit the MAP and any amendments to the MAP to the AQD District Supervisor for review and approval. If the AQD does not notify the permittee within 90 days of submittal, the MAP or amended MAP shall be considered approved. Until an amended plan is approved, the permittee shall implement corrective procedures or operational changes to achieve compliance with all applicable emission limits. **(R 336.1331, R 336.1910, R 336.1911, R 336.2803, R 336.2804, R 336.2810)**

2. The permittee shall not operate FGFACILITY unless the fugitive dust control plan for all plant roadways, the plant yard, all material storage piles, and all material handling operations, attached as Appendix A, is implemented and maintained. **(R 336.1371, R 336.1372, Act 451 324.5524, R 336.2803, R 336.2804, R 336.2810)**

3. The permittee shall not operate FGFACILITY for more than 6,000 hours per 12-month rolling time period as determined at the end of each calendar month. **(R 336.1224, R 336.1225, R 336.1702, R 336.2803, R 336.2804, R 336.2810)**

IV. STACK/VENT RESTRICTION(S)

The exhaust gases from the stacks listed in the table below shall be discharged unobstructed vertically upwards to the ambient air unless otherwise noted:

Stack & Vent ID	Maximum Exhaust Diameter (inches)	Minimum Height Above Ground (feet)	Underlying Applicable Requirements
1. SVAB-BH	101.4	110	R 336.1225, R 336.2803, R 336.2804
2. SVC-BH	80.2	155	R 336.1225, R 336.2803, R 336.2804
3. SVD-BH	71.6	155	R 336.1225, R 336.2803, R 336.2804
4. SVE-BH	63	155	R 336.1225, R 336.2803, R 336.2804
5. SVF-BH	63	155	R 336.1225, R 336.2803, R 336.2804
6. SVG-BH	50.8	135	R 336.1225, R 336.2803, R 336.2804
7. SVHJ-BH	113.3	110	R 336.1225, R 336.2803, R 336.2804

Stack & Vent ID	Maximum Exhaust Diameter (inches)	Minimum Height Above Ground (feet)	Underlying Applicable Requirements
8. SVK-BH	36	65	R 336.1225, R 336.2803, R 336.2804
9. SVL-BH	36	65	R 336.1225, R 336.2803, R 336.2804

B. TESTING

1. Every five years the permittee shall verify PM, PM10, and PM2.5 emission rates and CO and VOC emission rates as applicable, from each baghouse stack listed in FGFACILITY (SVAB-BH, SVC-BH, SVD-BH, SVE-BH, SVF-BH, SVG-BH, SVHJ-BH, SVK-BH, SVL-BH) by testing at owner's expense, in accordance with Department requirements. No less than 60 days prior to testing, the permittee shall submit a complete test plan to the AQD Technical Programs Unit and District Office. The AQD must approve the final plan prior to testing. Verification of emission rates includes the submittal of a complete report of the test results to the AQD Technical Programs Unit and District Office within 60 days following the last date of the test. **(R 336.1205, R 336.2803, R 336.2804, R 336.2810)**

2. The permittee shall perform and record the results of a non-certified visible emission check on all of the emission points from FGFACILITY at least once per calendar day during routine operating conditions. The visible emission check shall simply verify the presence of visible emissions and need not follow the procedures specified in Federal Reference Test Method 9. Therefore, multiple stacks may be observed simultaneously. Each visible emission check shall be taken during routine operating conditions and be a minimum of 6 minutes. If visible emissions are observed, the permittee shall immediately initiate corrective actions and document the corrective actions taken. **(R 336.1201(3))**

C. MONITORING/RECORDKEEPING

1. Records shall be maintained on file for a period of five years. (R 336.1201(3))

2. The permittee shall complete all required calculations in a format acceptable to the AQD District Supervisor by the 30th day of the calendar month, for the previous calendar month, unless otherwise specified in any monitoring/recordkeeping special condition. **(R 336.1205(3), R 336.1702, R 336.2803, R 336.2804, R 336.2810)**

3. The permittee shall keep the following information on a monthly basis for FGFACILITY:
   a) Total Metal Charged, tons/year, based upon a 12-month rolling time period as determined at the end of each calendar month.
   b) Lake sand processed, tons/year, based upon a 12-month rolling time period as determined at the end of each calendar month.
   c) Resin binder/catalyst processed, tons/year, based upon a 12-month rolling time period as determined at the end of each calendar month.
   d) Natural gas usage, cubic foot/year, based upon a 12-month rolling time period as determined at the end of each calendar month.
   e) Hours of operation for FGFACILITY based upon a 12-month rolling time period as determined at the end of each calendar month.
   f) CO and VOC emission calculations determining the emission rates in lb per ton of metal charged.
   g) Individual and aggregate HAP emission calculations determining the monthly emission rate of each in tons per calendar month.
   h) Individual and aggregate HAP emission calculations determining the annual emission rate of each in tons per 12-month rolling time period as determined at the end of each calendar month.

   The permittee shall keep the records on file at the facility, in a format acceptable to the AQD District Supervisor, for a period of at least five years and make them available to the Department upon request. **(R336.1205(1)(b),R 336.1702, R 336.2803, R 336.2804, R 336.2810)**

4. The permittee shall maintain records of all information necessary to demonstrate compliance with the emission limits of this permit, including records of visible emissions observations required in SC V.2. **(R 336.1205(1)(a)&(b), R 336.1225, R 336.1331(c))**

D. REPORTING

1. Reporting shall be conducted as discussed above for stack tests.

2. Semiannual reporting of monitoring and deviations pursuant to General Condition 23 of Part A. The report shall be postmarked or received by the appropriate AQD District Office by March 15 for reporting period July 1 to December 31 and September 15 for reporting period January 1 to June 30. (R 336.1213(3)(c)(i))

3. Annual certification of compliance pursuant to General Conditions 19 and 20 of Part A. The report shall be postmarked or received by the appropriate AQD District Office by March 15 for the previous calendar year. (R 336.1213(4)(c))

Appendix A

FUGITIVE DUST CONTROL PLAN

PURPOSE: This plan provides dust control strategies for the areas adjacent to and associated with the equipment operations. Regarding truck loads (item 3.), large metal items, either incoming scrap metal or outgoing products are unlikely sources of fugitive dust and covered loads are not mandatory.

1. SITE MAINTENANCE

a. Dust on all areas where vehicular traffic will travel shall be controlled by the application of water, sweeping, vacuuming, or other acceptable dust control method. This will occur a minimum of two times per month or more frequently as dictated by weather conditions and vehicular activity. The dust control method shall be acceptable as determined by the District Supervisor.

b. The speed of vehicles on the site will be limited to 10 miles per hour or less. Signs will be posted to advise drivers of the speed limitation.

2. MANAGEMENT OF ON-SITE ROADWAYS

a. All the roadways on which the haul vehicles will travel are paved.

b. The paved plant roads shall be controlled by the application of water, sweeping, vacuuming, or other acceptable dust control method that minimizes the introduction of the dust to the ambient air to control fugitive dust emissions and track-out dust. This will occur a minimum of two times per month or more frequently as dictated by weather conditions and vehicular activity. The dust control method shall be acceptable as determined by the District Supervisor.

3. ON-SITE MANAGEMENT OF HAUL VEHICLES

a. INCOMING TRUCKS: Trucks entering the site shall control fugitive dust from the loads as needed.

b. OUT-GOING TRUCKS: All trucks leaving the site shall control fugitive dust from the loads as needed prior to leaving the site. A sign shall be posted to advise drivers of this requirement.

4. MANAGEMENT OF FRONT-END LOADER OPERATIONS

If a loader is used, the front-end loader operator shall be directed to minimize the drop height of the material.

5. RECORDKEEPING

Records of dust control activities on travel surfaces and other surfaces where fugitive dust emissions occur shall be kept on file and made available to EGLE staff upon request. The records will indicate the date, time, what was observed or the reason for the dust control activity (routine or other), and what action was taken.

6. FUGITIVE EMISSIONS FROM PROCESS EQUIPMENT AND FABRIC FILTER DUST COLLECTOR

Any fugitive emissions from leak(s) and malfunction(s) from any transfer system, storage bin, mixer, hopper, or fabric filter dust collector shall be immediately corrected to prevent further fugitive emissions.

EGLE

RENEWABLE OPERATING PERMIT APPLICATION
AI-001: ADDITIONAL INFORMATION

This information is required by Article II, Chapter 1, Part 55 (Air Pollution Control) of P.A. 451 of 1994, as amended, and the Federal Clean Air Act of 1990. Failure to obtain a permit required by Part 55 may result in penalties and/or imprisonment. Please type or print clearly. Refer to instructions for additional information to complete this form.

SRN: N6052	Section Number (if applicable):

1. Additional Information ID
AI-S-003(5)

Additional Information

2. Is This Information Confidential? ☐ Yes ☒ No

5. Does this stationary source have the potential to emit (PTE) of 100 tons per year or more of any criteria pollutant (PM-10, PM2.5, VOC, SO2, CO, lead)? If Yes, include potential emission calculations for each identified pollutant on an AI-001 Form.

Yes, the facility has the potential to emit (PTE) of 100 tons per year or more of VOC and CO emissions.

See attached potential emission calculations for all criteria pollutants.

Form AI-S003(5) Supplement
Potential to Emit
Criteria Pollutant Emissions Summary
East Jordan Foundry, LLC

PROCESS	EU ID	Emissions Estimates - PSD Regulated Pollutants Tons/Year								
		PM	PM10	PM2.5	SOx	NOx	VOC	CO	Lead	CO2e
Charge Handling	EUCHRGHAND	0.448	0.448	0.384						
EIF Melting	EUEIFMELT	0.576	0.550	0.541			1.920	21.120		1,556
Ductile Inoculation	EUINOC	0.038	0.038	0.024			0.637			
Hot Metal Transfer	EUMETALXFER	0.036	0.033	0.029						
Ladle Repair	EULDLREPAIR									
In-Duct Burners	EUDUCTBURN				0.003	0.441	0.024	0.371	2.21E-06	529
Ladle Heaters	EULDLHEAT	0.637	0.637	0.637	0.050	8.382	0.461	7.041	4.19E-05	10,059
Pouring & Cooling Total		0.131	0.131	0.108	16.640	4.381	79.424	417.497	1.57E-04	1,578
LML Pouring & Cooling	*EULMLP&C*	*0.131*	*0.131*	*0.108*	*16.640*	*4.381*	*79.424*	*417.497*	*1.57E-04*	*1,578*
1230 Pouring & Cooling	*EU1230P&C*	*0.131*	*0.131*	*0.108*	*16.640*	*4.381*	*79.424*	*417.497*	*1.57E-04*	*1,578*
Shakeout Total						0.128	33.792	101.883	8.06E-03	
LML Shakeout	*EULMLSO*					*0.128*	*33.792*	*101.883*	*8.06E-03*	
1230 Shakeout	*EU1230SO*					*0.128*	*33.792*	*101.883*	*8.06E-03*	
Shotblast	EUSHOTBLAST									
Grinding	EUGRIND	0.307	0.001	0.001						
Sand Handling & Storage (H&S)	EUSANDH&S	1.037	0.156	0.156						
Shell Coremaking	EUSHELLCM	0.068	0.068	0.067	0.005	0.882	2.900	0.741	4.41E-06	1,059
Shell Coremaking		*0.001*	*0.001*	*0.000*			*2.851*			
Shell Core NG		*0.067*	*0.067*	*0.067*	*0.005*	*0.882*	*0.049*	*0.741*	*4.41E-06*	*1,059*
PUCB Coremaking	EUPUCBCM	0.003	0.003	0.003			1.700			
Mold & Core Room Chemicals	EUMOLDCORECHEM						2.563			
Asphaltic Dip Tank	EUASPHALTDIP	0.081	0.081	0.081	0.006	1.071	15.245	0.899	5.35E-06	1,285
Asphaltic Dip Coating							*15.186*			
Asphaltic Dip Tank Pre-Heater		*0.081*	*0.081*	*0.081*	*0.006*	*1.071*	*0.059*	*0.899*	*5.35E-06*	*1,285*
Makeup Air Units	EUMUAS	1.143	1.143	1.143	0.090	15.036	0.827	12.630	7.52E-05	18,043
MUA-1		*0.109*	*0.109*	*0.109*	*0.009*	*1.432*	*0.079*	*1.203*	*7.16E-06*	*1,718*
MUA-2		*0.109*	*0.109*	*0.109*	*0.009*	*1.432*	*0.079*	*1.203*	*7.16E-06*	*1,718*
MUA-3		*0.109*	*0.109*	*0.109*	*0.009*	*1.432*	*0.079*	*1.203*	*7.16E-06*	*1,718*
MUA-4		*0.109*	*0.109*	*0.109*	*0.009*	*1.432*	*0.079*	*1.203*	*7.16E-06*	*1,718*
MUA-5		*0.109*	*0.109*	*0.109*	*0.009*	*1.432*	*0.079*	*1.203*	*7.16E-06*	*1,718*
MUA-6		*0.109*	*0.109*	*0.109*	*0.009*	*1.432*	*0.079*	*1.203*	*7.16E-06*	*1,718*
MUA-7		*0.109*	*0.109*	*0.109*	*0.009*	*1.432*	*0.079*	*1.203*	*7.16E-06*	*1,718*
MUA-8		*0.109*	*0.109*	*0.109*	*0.009*	*1.432*	*0.079*	*1.203*	*7.16E-06*	*1,718*
MUA-9		*0.109*	*0.109*	*0.109*	*0.009*	*1.432*	*0.079*	*1.203*	*7.16E-06*	*1,718*
MUA-10		*0.082*	*0.082*	*0.082*	*0.006*	*1.074*	*0.059*	*0.902*	*5.37E-06*	*1,289*
MUA-11		*0.082*	*0.082*	*0.082*	*0.006*	*1.074*	*0.059*	*0.902*	*5.37E-06*	*1,289*
Various NG Sources	EUVARIOUSNG	0.104	0.104	0.104	0.008	1.369	0.075	1.150	6.85E-06	1,643
EG-1	EUEG1	0.002	0.002	0.002	0.000	0.547	0.007	0.896		28
EG-2	EUEG2	0.002	0.002	0.002	0.000	0.547	0.007	0.896		28
Road Fug. Dust	EUROADS	0.039	0.008	0.008						
Waste Sand Dust Handling	EUWASTESAND									
Baghouse Total		31.528	31.528	31.528						
Baghouse AB		*8.177*	*8.177*	*8.177*						
Baghouse C		*3.833*	*3.833*	*3.833*						
Baghouse D		*1.089*	*1.089*	*1.089*						
Baghouse E		*3.115*	*3.115*	*3.115*						
Baghouse F		*3.115*	*3.115*	*3.115*						
Baghouse G		*2.044*	*2.044*	*2.044*						
Baghouse HJ		*5.111*	*5.111*	*5.111*						
Baghouse K		*1.022*	*1.022*	*1.022*						
Baghouse L		*1.022*	*1.022*	*1.022*						
Total Emissions		**36.18**	**34.93**	**34.82**	**16.80**	**32.78**	**139.58**	**565.13**	**8.36E-03**	**35,808**

Form AI-S003(5) Supplement
Potential to Emit
Emissions Calculations
East Jordan Foundry, LLC

Maximum Yearly Capacity
128,000 Tons/Year

Flow Diagram Designation
Charge Handling

Maximum Hourly Capacity
28.00 Tons/Hour

Process Description:
East Jordan Foundry, LLC
Charge Handling
Control Device: Baghouses A/B, E, H/J, K
SCC Code:
Control Device Outlet: gr/dscf
Airflow: acfm
Stack Gas Temperature: 100 °F

The sprue return conveyors (1530) and alloy delivery system are included in the charge handling system.

Facility Process Name:	Criteria Pollutants								
Charge Handling									
Emission Factor Basis:	PM	PM10	PM2.5	SOx	NOx	VOC	CO	Lead	CO_2e
Emission Factors:	0.07	0.07	0.06						
(source)	Note 1	Note 1	Note 3						
Capture Efficiencies:	90.00	90.00	90.00						
Maximum Stack Emission Rate:									
Hourly (lb/hr)	See Controlling BH(s) for Stk Emissions								
Annual (TPY)	See Controlling BH(s) for Stk Emissions								
Maximum Fugitive Emission Rate:									
Hourly (lb/hr)	0.196	0.196	0.168						
Annual (TPY)	0.448	0.448	0.384						
Total Emission Rate:									
Hourly (lb/hr)	0.196	0.196	0.168						
Annual (TPY)	0.448	0.448	0.384						

PROPOSED OPERATING SCHEDULE
24 HRS/DAY
6,000 HRS/YEAR

Note 1: Gutow Article, Modern Casting; January 1972; PM emissions from Raw material handling (0.04 lbs/ton) and charge makeup (0.03 lbs/ton) released to the atmosphere. All PM emission were conservatively assumed to be PM-10 emissions.
Note 2: The Gutow article was supplement with an Ohio EPA RACM document to account for the ventilation at the sprue conveyor and inoculant addition system. Ohio EPA RACM guide indicates that the emissions generated from incoming scrap are of particle size 30 -1000 microns. Therefore the only source of emissions of PM/PM10 from raw material handling is from handling of foundry returns. Sprue return ventilation system would capture 80% of the emissions generated from foundry returns.
Note 3: Emission factor based on USEPA PM Calculator (March 2012) PM to PM2.5 ratio and uncontrolled PM emission factor.

EXAMPLE CALCULATIONS:
Maximum Emission Rate (lb/hr) {building exhausts} = (Emission Factor lb/ton) x (Maximum Hourly Rate tph) x (% returns/100 for PM10 only) x (1- %fugitive rate/100)
Maximum Emission Rate (lb/hr) {fugitive} = (Emission Factor lb/ton) x (Maximum Hourly Rate tph) x (%returns for PM10 only) x (% fugitive emissions rate/100)
Annual (TPY) Emission Rates = (lb/hr emission rate) x (Maximum Annual Melt Rate) / (Maximum Hourly Melt Rate) / (2000 lbs/ton)

Form AI-S003(5) Supplement
Potential to Emit
Emissions Calculations
East Jordan Foundry, LLC

Maximum Yearly Capacity
128,000 Tons/Year

Flow Diagram Designation
EIF Melting

Maximum Hourly Capacity
28.00 Tons/Hour

Process Description:
East Jordan Foundry, LLC
EIF Melting
Control Device: Baghouses A/B
SCC Code:
Control Device Outlet: 0.0020 gr/dscf
Airflow: 57,000 acfm
Stack Gas Temperature: 100 °F

Facility Process Name: EIF Melting	Criteria Pollutants								
Emission Factor Basis:	PM	PM10	PM2.5	SOx	NOx	VOC	CO	Lead	CO_2e
Emission Factors: lb/ton	0.90	0.86	0.85			0.03	0.33		24.32
(source)	Note 1	Note 1	Note 6			Note 2	Note 4	Note 3	Note 5
Capture Efficiency	99.00	99.00	99.00			99.00	99.00		99.00
Control Efficiency									
Building Capt. Eff									
Maximum Stack Emission Rate:									
Hourly (lb/hr)	See Controlling BH(s) for Stk Emissions					0.832	9.148		674.069
Annual (TPY)	See Controlling BH(s) for Stk Emissions					1.901	20.909		1540.728
Maximum Fugitive Emission Rate:									
Hourly (lb/hr)	0.252	0.241	0.237			0.008	0.092		6.809
Annual (TPY)	0.576	0.550	0.541			0.019	0.211		15.563
Total Emission Rate:									
Hourly (lb/hr)	0.252	0.241	0.237			0.840	9.240		680.877
Annual (TPY)	0.576	0.550	0.541			1.920	21.120		1556.291

PROPOSED OPERATING SCHEDULE
24 HRS/DAY
6,000 HRS/YEAR

Note 1: Emission factor from FIRE 6.25 SCC 3-04-003-03
Note 2: From Stack testing at Wheland Foundry in Tennessee
Note 3: See below HAPs calculations
Note 4: EJIW Foundry Stack Testing (Oct 2010). Results used with Wheland and Technikon information to distribute between melting, pouring, cooling and shakeout
Note 5: EJIW Stack Testing (July 2010). Average rate calculated between MS-01 & MS-02. Methane and Nitrous Oxide emissions are not known. Background concentration of CO2 was not considered
Note 6: Emission factor based on USEPA PM Calculator (March 2012) PM to PM2.5 ratio and uncontrolled PM emission factor

EXAMPLE CALCULATIONS:
Maximum Stack Emission Rate (lb/hr) {PM & PM-10}=(gr/acfm) x (acfm) x (1 lb / 7000 grains) x (60 min / 1 hr)
Maximum Stack Emission Rate (lb/hr) {Lead}=(gr/acfm) x (acfm) x (1 lb / 7000 grains) x (60 min / 1 hr)*(Lead EF/PM EF)
Maximum Annual (Ton/yr) Stack Emission Rates = (lb/hr emission rate) x (hours of operation per year at max. rate) x (ton/2000 lbs)
Maximum Fugitive Emission Rate (lb/hr) = ((1 - Capture Efficiency/100) x (Emission Factor) x (Melt ton/hr) x (1-(Settling Factor)/100)
Maximum Annual Fugitive Emissions (ton/yr)= (Hourly fugitive emissions (lb/hr)/ hourly Process rate (ton/hr) x (Annual process rate (tons/yr) x (ton/2000 lbs)
Total Emission Rate (lb/hr) = (Maximum Stack Emission Rate lb/hr) + (Maximum Fugitive Emission Rate lb/hr)
Total Emission Rates Annual (TPY)= (annual stack emissions (ton/yr)) + (annual fugitive emissions (ton/yr))

East Jordan Foundry, LLC
HAP Emission Calculations
EIF Melting

HAPs	CAS #	Note 10 Emission Factor %wt PM	Emissions lbs/hr	Emissions tons/yr	
Antimony (Sb)	7440-36-0				
Arsenic (As)	7440-38-2				
Beryllium (Be)	7440-41-7				
Cadmium (Cd)	7440-43-9				
Chromium (Cr)	7440-47-3	0.30	0.0039	0.0110	Note 8
Cobalt (Co)	7440-48-4				
Lead (Pb)	7439-92-1	0.13	0.0017	0.0048	Note 9
Manganese (Mn)	7439-96-5	0.70	0.0090	0.0257	Note 8
Mercury (Hg)	7439-97-6				
Nickel (Ni)	7440-02-0	0.10	0.0013	0.0037	Note 8
Selenium (Se)	7782-49-2				
Acetaldehyde	75-07-0				
Dimethylnaphthalenes	28804-88-8				
Cresol	1319-77-3				
Methylnaphthalenes	90-12-0				
Propionaldehyde	123-38-6				
Methylene diphenyl diisocyanate (MDI)	101-68-8				
4,4-methylenedianiline (MBA)	101-77-9				
Formaldehyde	50-00-0				
Cumene	98-82-8				
Benzene	71-43-2				
O-Xylene	95-47-6				
M-Xylene	108-38-3				
Phenol	108-95-2				
Naphthalene	91-20-3				
Ethyl Benzene	100-41-4				
Hydrogen Flouride	7664-39-3				
Toluene	108-88-3				
P-Xylene	106-42-3				
Hexane	110-54-3				
Xylenes	1330-20-7				
o-Cresol	95-48-7				
Styrene	100-42-5				
Acetophenone	98-86-2				
Dibenzofurans	132-64-9				
Nitrobenzene	98-95-3				
Total HAPs			1.58E-02	4.52E-02	

Note 8: Emission factors are taken from design range of Gray & Ductile Iron. Emissions were estimated using the highest end of the concentration range of either metal type
Note 9: Emission factor developed using the average compositional lead content of baghouse dust
Note 10: %wt of PM EF multiplied fugitive and stack emissions. Stack emissions derived from air volume allocated to EIFs and gr loading of BH

Form AI-S003(5) Supplement
Potential to Emit
Emissions Calculations
East Jordan Foundry, LLC

Maximum Yearly Capacity
128,000 Tons/Year

Flow Diagram Designation
Ductile Inoculation

Maximum Hourly Capacity
28.00 Tons/Hour

Process Description:
East Jordan Foundry, LLC
Ductile Inoculation
Control Device: Baghouses A/B
SCC Code:
Control Device Outlet: gr/dscf
Airflow: acfm
Stack Gas Temperature: °F

Facility Process Name:			**Criteria Pollutants**								
	Ductile Inoculation										
Emission Factor Basis:			**PM**	**PM10**	**PM2.5**	**SOx**	**NOx**	**VOC**	**CO**	**Lead**	**CO_2e**
Emission Factors:		lb/ton	3.00	3.00	1.89			0.005			
(source)			Note 2	Note 2	Note 3			Note 1			
		Capture Efficiency	99.00	99.00	99.00			99.00			
Note 4		Process Design Reduction Eff.	98.00	98.00	98.00						
		Building Capt. Eff									
Maximum Stack Emission Rate:											
	Hourly (lb/hr)		See Controlling BH(s) for Stk Emissions					0.139			
	Annual (TPY)		See Controlling BH(s) for Stk Emissions					**0.317**			
Maximum Fugitive Emission Rate:											
	Hourly (lb/hr)		0.017	0.017	0.011			0.140			
	Annual (TPY)		**0.038**	**0.038**	**0.024**			**0.320**			
Total Emission Rate:											
	Hourly (lb/hr)		0.017	0.017	0.011			0.279			
	Annual (TPY)		**0.038**	**0.038**	**0.024**			**0.637**			

PROPOSED OPERATING SCHEDULE
24 HRS/DAY
6,000 HRS/YEAR

Note 1: Emission factor from FIRE 6.25 SCC 3-04-003-10
Note 2: Emission factor from FIRE 6.25 SCC 3-04-003-22
Note 3: Emission factor based on USEPA PM Calculator (March 2012) PM to PM2.5 ratio and uncontrolled PM emission factor.
Note 4: The inoculation ladle and method of inoculation "Tundish Ladle" that has been chosen is designed to minimize emissions to the atmosphere from this process. The manufacturer advertises a reduction in emissions of 98%.

EXAMPLE CALCULATIONS:
Maximum Fugitive Emission Rate (lb/hr) = (Emission Factor) x (process weight rate (ton/hr)) x (1-(Settling Factor)/100)
Annual (TPY) Emission Rates = (lb/hr emission rate) x (1/ Maximum Hourly Process Rate (tons/hr)) x (Annual process weight rate (tons/yr))x (ton/2000)

Form AI-S003(5) Supplement
Potential to Emit
Emissions Calculations
East Jordan Foundry, LLC

Maximum Yearly Capacity
128,000 Tons/Year

Flow Diagram Designation
Hot Metal Transfer

Maximum Hourly Capacity
28.00 Tons/Hour

Process Description:
East Jordan Foundry, LLC
Hot Metal Transfer
Control Device: Baghouses A/B
SCC Code:
Control Device Outlet: gr/dscf
Airflow: acfm
Stack Gas Temperature: °F

Facility Process Name:	Criteria Pollutants								
Hot Metal Transfer									
Emission Factor Basis:	PM	PM10	PM2.5	SOx	NOx	VOC	CO	Lead	CO_2e
Emission Factors:	0.056	0.052	0.046						
(source)	Note 1	Note 2	Note 3						
Capture Efficiency	99.00	99.00	99.00						
Control Efficiency	99.00	99.00	99.00						
Building Capt. Eff									
Maximum Stack Emission Rate:									
Hourly (lb/hr)	See Controlling BH(s) for Stk Emissions								
Annual (TPY)	See Controlling BH(s) for Stk Emissions								
Maximum Fugitive Emission Rate:									
Hourly (lb/hr)	0.016	0.014	0.013						
Annual (TPY)	**0.036**	**0.033**	**0.029**						
Total Emission Rate:									
Hourly (lb/hr)	0.016	0.014	0.013						
Annual (TPY)	**0.036**	**0.033**	**0.029**						

PROPOSED OPERATING SCHEDULE
24 HRS/DAY
6,000 HRS/YEAR

Note 1: Hot metal transfer at building monitor. AP-42, Ch. 12-5, Table 12.5-1
Note 2: Emission factor based on USEPA PM Calculator PM/PM10/PM2.5 ratio and uncontrolled PM emission factor for SCC 30400320

EXAMPLE CALCULATIONS:
Maximum Stack Emission Rate (lb/hr) {PM,PM-10} =(gr/acfm) x (acfm) x (1 lb / 7000 grains) x (60 min / 1 hr)
Maximum Annual (Ton/yr) stack Emission Rates = (lb/hr emission rate) x (hours of operation per year at max. rate) x (ton/2000 lbs)
Maximum Fugitive Emission Rate (lb/hr) = ((1 - Capture Efficiency/100) x (Emission Factor) x (Melt ton/hr) x (1-(Settling Factor)/100)
Maximum Annual Fugitive Emissions (ton/yr)= (Hourly fugitive emissions (lb/hr)/ hourly Process rate (ton/hr) x (Annual process rate (tons/yr) x (ton/2000 lbs)
Total Emission Rate (lb/hr) = (Maximum Stack Emission Rate lb/hr) + (Maximum Fugitive Emission Rate lb/hr)
Total Emission Rates Annual (TPY)= (annual stack emissions (ton/yr)) + (annual fugitive emissions (ton/yr))

Form AI-S003(5) Supplement
Potential to Emit
Emissions Calculations
East Jordan Foundry, LLC

Maximum Yearly Capacity
128,000 Tons/Year

Flow Diagram Designation
Ladle Repair

Maximum Hourly Capacity
28.00 Tons/Hour

Process Description:
East Jordan Foundry, LLC
Ladle Repair
Control Device: Baghouse K
SCC Code:
Control Device Outlet: gr/dscf
Airflow: acfm
Stack Gas Temperature: 100 °F

Facility Process Name:		Criteria Pollutants								
Ladle Repair										
Emission Factor Basis:		PM	PM10	PM2.5	SOx	NOx	VOC	CO	Lead	CO_2e
Emission Factors:	lb/ton									
(source)										
Capture Efficiency		100.00	100.00	100.00						
Control Efficiency										
Building Capt. Eff		70.00	70.00	70.00						
Maximum Stack Emission Rate:										
Hourly (lb/hr)		See Controlling BH(s) for Stk Emissions								
Annual (TPY)		See Controlling BH(s) for Stk Emissions								
Maximum Fugitive Emission Rate:										
Hourly (lb/hr)										
Annual (TPY)										
Total Emission Rate:										
Hourly (lb/hr)										
Annual (TPY)										

PROPOSED OPERATING SCHEDULE
22 HRS/DAY
6,000 HRS/YEAR

EXAMPLE CALCULATIONS:
Maximum Stack Emission Rate (lb/hr) {PM,PM-10} =(gr/acfm) x (acfm) x (1 lb / 7000 grains) x (60 min / 1 hr)
Maximum Annual (Ton/yr) stack Emission Rates = (lb/hr emission rate) x (hours of operation per year at max. rate) x (ton/2000 lbs)

Form AI-S003(5) Supplement
Potential to Emit
Emissions Calculations
East Jordan Foundry, LLC

Flow Diagram Designation
In-Duct Burners

Process Description:
In-Duct Burners
Control Device:

Natural Gas Combustion

Inputs

1.5	= Max. Hourly Heat Input Rate (MMBtu/hr)
1020	= MMBtu/MMscf
1470.6	= Max. Hourly Fuel Usage Rate (standard cubic feet hour)
6000	= Maximum Operation (hours/year)
8.823529412	= Maximum Annual Fuel Usage (MMscf)

POLLUTANT	CAS #	Note 1 Emission Factor (lb/10^6 scf)	Maximum Emissions (lbs/hr)	(tpy)
PM/PM10/PM2.5	n/a	7.6	See BH Emissions for each Stk	
NOx	n/a	100.0	0.15	0.44
CO	n/a	84.0	0.12	0.37
Lead	n/a	0.0005	7.35E-07	2.21E-06
SO2	n/a	0.6	0.001	0.003
VOC	n/a	5.5	0.01	0.02
CO_2e	n/a	120,000	176.47	529.41
Arsenic (As)	7440-38-2	2.00E-04	2.94E-07	8.82E-07
Beryllium (Be)	7440-41-7	1.20E-05	1.76E-08	5.29E-08
Cadmium (Cd)	7440-43-9	1.10E-03	1.62E-06	4.85E-06
Chromium (Cr)	7440-47-3	1.40E-03	2.06E-06	6.18E-06
Cobalt (Co)	7440-48-4	8.40E-05	1.24E-07	3.71E-07
Manganese (Mn)	7439-96-5	3.80E-04	5.59E-07	1.68E-06
Mercury (Hg)	7439-97-6	2.60E-04	3.82E-07	1.15E-06
Nickel (Ni)	7440-02-0	2.10E-03	3.09E-06	9.26E-06
Selenium (Se)	7782-49-2	2.40E-05	3.53E-08	1.06E-07
POM/2-Methylnaphthalene	91-57-6	2.40E-05	3.53E-08	1.06E-07
POM/3-Methylchloranthrene	56-49-5	1.80E-06	2.65E-09	7.94E-09
POM/7,12-Dimethylbenz(a)anthracene	57-97-6	1.60E-05	2.35E-08	7.06E-08
POM/Acenaphthene	83-32-9	1.80E-06	2.65E-09	7.94E-09
POM/Acenaphthylene	203-96-8	1.80E-06	2.65E-09	7.94E-09
POM/Anthracene	120-12-7	2.40E-06	3.53E-09	1.06E-08
POM/Benz(a)anthracene	56-55-3	1.80E-06	2.65E-09	7.94E-09
Benzene	71-43-2	2.10E-03	3.09E-06	9.26E-06
POM/Benzo(a)pyrene	50-32-8	1.20E-06	1.76E-09	5.29E-09
POM/Benzo(b)fluoranthene	205-99-2	1.20E-06	1.76E-09	5.29E-09
POM/Benzo(g,h,i)perylene	191-24-2	1.20E-06	1.76E-09	5.29E-09
POM/Benzo(k)fluoranthene	205-82-3	1.80E-06	2.65E-09	7.94E-09
POM/Chrysene	218-01-9	1.80E-06	2.65E-09	7.94E-09
POM/Dibenzo(a,h)anthracene	53-70-3	1.20E-06	1.76E-09	5.29E-09
Dichlorobenzene	25321-22-6	1.20E-03	1.76E-06	5.29E-06
POM/Fluoranthene	206-44-0	3.00E-06	4.41E-09	1.32E-08
POM/Fluorene	86-73-7	2.80E-06	4.12E-09	1.24E-08
Formaldehyde	50-00-0	7.50E-02	1.10E-04	3.31E-04
Hexane	110-54-3	1.80E+00	2.65E-03	7.94E-03
POM/Indeno(1,2,3-cd)pyrene	193-39-5	1.80E-06	2.65E-09	7.94E-09
Naphthalene	91-20-3	6.10E-04	8.97E-07	2.69E-06
POM/Phenanathrene	85-01-8	1.70E-05	2.50E-08	7.50E-08
POM/Pyrene	129-00-0	5.00E-06	7.35E-09	2.21E-08
Toluene	108-88-3	3.40E-03	5.00E-06	1.50E-05
Total POM			1.29E-07	3.86E-07
Total HAPs			2.78E-03	8.33E-03

Note 1: FROM AP-42 Fifth Edition, Supplement D, TABLE 1.4-2&3&4. 7/98 External Combustion Sources 1.4-9. Many emission factors < than specific value. In this case, specific value used to error on conservative side

EXAMPLE CALCULATIONS:
Maximum Hourly Emission = Max.hourly Fuel Usage rate (standard cubic feet hour) x (Pollutant E.F.)
Maximum Yearly Emission = Max.Hourly Emission Rate (lb/hr) x (Maximum Hours of Operation)

Form AI-S003(5) Supplement
Potential to Emit
Emissions Calculations
East Jordan Foundry, LLC

Flow Diagram Designation
Ladle Heaters

Process Description:
Ladle Heaters
Control Device:

Natural Gas Combustion

Inputs	
28.5	= Max. Hourly Heat Input Rate (MMBtu/hr)
1020	= MMBtu/MMscf
27941.2	= Max. Hourly Fuel Usage Rate (standard cubic feet hour)
6000	= Maximum Operation (hours/year)
167.6470588	= Maximum Annual Fuel Usage (MMscf)

POLLUTANT	CAS #	Note 1 Emission Factor ($lb/10^6$ scf)	Maximum Emissions (lbs/hr)	(tpy)
PM/PM10/PM2.5	n/a	7.6	0.21	0.64
NOx	n/a	100.0	2.79	8.38
CO	n/a	84.0	2.35	7.04
Lead	n/a	0.0005	1.40E-05	4.19E-05
SO2	n/a	0.6	0.017	0.050
VOC	n/a	5.5	0.15	0.46
CO_2e	n/a	120,000	3352.94	10058.82
Arsenic (As)	7440-38-2	2.00E-04	5.59E-06	1.68E-05
Beryllium (Be)	7440-41-7	1.20E-05	3.35E-07	1.01E-06
Cadmium (Cd)	7440-43-9	1.10E-03	3.07E-05	9.22E-05
Chromium (Cr)	7440-47-3	1.40E-03	3.91E-05	1.17E-04
Cobalt (Co)	7440-48-4	8.40E-05	2.35E-06	7.04E-06
Manganese (Mn)	7439-96-5	3.80E-04	1.06E-05	3.19E-05
Mercury (Hg)	7439-97-6	2.60E-04	7.26E-06	2.18E-05
Nickel (Ni)	7440-02-0	2.10E-03	5.87E-05	1.76E-04
Selenium (Se)	7782-49-2	2.40E-05	6.71E-07	2.01E-06
POM/2-Methylnaphthalene	91-57-6	2.40E-05	6.71E-07	2.01E-06
POM/3-Methylchloranthrene	56-49-5	1.80E-06	5.03E-08	1.51E-07
POM/7,12-Dimethylbenz(a)anthracene	57-97-6	1.60E-05	4.47E-07	1.34E-06
POM/Acenaphthene	83-32-9	1.80E-06	5.03E-08	1.51E-07
POM/Acenaphthylene	203-96-8	1.80E-06	5.03E-08	1.51E-07
POM/Anthracene	120-12-7	2.40E-06	6.71E-08	2.01E-07
POM/Benz(a)anthracene	56-55-3	1.80E-06	5.03E-08	1.51E-07
Benzene	71-43-2	2.10E-03	5.87E-05	1.76E-04
POM/Benzo(a)pyrene	50-32-8	1.20E-06	3.35E-08	1.01E-07
POM/Benzo(b)fluoranthene	205-99-2	1.20E-06	3.35E-08	1.01E-07
POM/Benzo(g,h,i)perylene	191-24-2	1.20E-06	3.35E-08	1.01E-07
POM/Benzo(k)fluoranthene	205-82-3	1.80E-06	5.03E-08	1.51E-07
POM/Chrysene	218-01-9	1.80E-06	5.03E-08	1.51E-07
POM/Dibenzo(a,h)anthracene	53-70-3	1.20E-06	3.35E-08	1.01E-07
Dichlorobenzene	25321-22-6	1.20E-03	3.35E-05	1.01E-04
POM/Fluoranthene	206-44-0	3.00E-06	8.38E-08	2.51E-07
POM/Fluorene	86-73-7	2.80E-06	7.82E-08	2.35E-07
Formaldehyde	50-00-0	7.50E-02	2.10E-03	6.29E-03
Hexane	110-54-3	1.80E+00	5.03E-02	1.51E-01
POM/Indeno(1,2,3-cd)pyrene	193-39-5	1.80E-06	5.03E-08	1.51E-07
Naphthalene	91-20-3	6.10E-04	1.70E-05	5.11E-05
POM/Phenanathrene	85-01-8	1.70E-05	4.75E-07	1.43E-06
POM/Pyrene	129-00-0	5.00E-06	1.40E-07	4.19E-07
Toluene	108-88-3	3.40E-03	9.50E-05	2.85E-04
Total POM			2.45E-06	7.34E-06
Total HAPs			5.28E-02	1.58E-01

Note 1: FROM AP-42 Fifth Edition, Supplement D, TABLE 1.4-2&3&4. 7/98 External Combustion Sources 1.4-9. Many emission factors < than specific value. In this case, specific value used to error on conservative side

EXAMPLE CALCULATIONS:
Maximum Hourly Emission = Max.hourly Fuel Usage rate (standard cubic feet hour) x (Pollutant E.F.)
Maximum Yearly Emission = Max.Hourly Emission Rate (lb/hr) x (Maximum Hours of Operation)

Form AI-S003(5) Supplement
Potential to Emit
Emissions Calculations
East Jordan Foundry, LLC

Maximum Yearly Capacity
128,000 Tons/Year

Flow Diagram Designation
LML Pouring & Cooling

Maximum Hourly Capacity
28.00 Tons/Hour

Process Description:
East Jordan Foundry, LLC
LML Pouring & Cooling

Control Device:	Baghouses A/B, D		
SCC Code:			
Control Device Outlet:	0.0020	gr/dscf	gr/dscf
Airflow:	129,000	acfm	acfm
Stack Gas Temperature:	100	°F	

Facility Process Name:		Criteria Pollutants								
LML Pouring & Cooling										
Emission Factor Basis:		PM	PM10	PM2.5	SOx	NOx	VOC	CO	Lead	CO_2e
Emission Factors:	lb/ton	0.410	0.410	0.336	0.260	0.068	1.241	6.523	0.00048	24.654
(source)		Note 1	Note 1	Note 8	Note 2	Note 6	Note 5	Note 4	Note 3	Note 7
Capture Efficiency		99.50	99.50	99.50	99.50	99.50	99.50	99.50	99.50	99.50
Control Efficiency										
Building Capt. Eff										
Maximum Stack Emission Rate:										
Hourly (lb/hr)		See Controlling BH(s) for Stk Emissions			7.244	1.907	34.574	181.742	2.45E-03	686.854
Annual (TPY)		See Controlling BH(s) for Stk Emissions			**16.557**	**4.360**	**79.027**	**415.410**	**3.67E-06**	**1569.951**
Maximum Fugitive Emission Rate:										
Hourly (lb/hr)		0.057	0.057	0.047	0.036	0.010	0.174	0.913	6.71E-05	3.452
Annual (TPY)		**0.131**	**0.131**	**0.108**	**0.083**	**0.022**	**0.397**	**2.087**	**1.53E-04**	**7.889**
Total Emission Rate:										
Hourly (lb/hr)		0.057	0.057	0.047	7.280	1.917	34.748	182.655	2.51E-03	690.305
Annual (TPY)		**0.131**	**0.131**	**0.108**	**16.640**	**4.381**	**79.424**	**417.497**	**1.57E-04**	**1577.840**

PROPOSED OPERATING SCHEDULE
24 HRS/DAY
6,000 HRS/YEAR

Note 1: Stack test at Quality Castings, Orrville, OH.
Note 2: 2019 Compliance Test plus 20% allowance for testing and measurement variability each.
Note 3: From Stack testing at Foundry in Mexico (CERP data)
Note 4: EJIW Foundry Stack Testing (Oct 2010). Results used with Wheland and Technikon information to distribute between melting, pouring, cooling and shakeout.
Note 5: EJIW Stack testing (March 2002) and Technikon #1410-117 FU
Note 6: EJIW Stack Testing (March 2002, July 2010)
Note 7: EJIW-Ardmore Foundry Stack Testing (July 2010). Average rate calculated between SS-01 & SS-03. Methane and Nitrous Oxide emissions are not known. Background concentration of CO_2 was not considered.
Note 8: Emission factor based on USEPA PM Calculator (March 2012) PM to PM2.5 ratio and uncontrolled PM emission factor.
Note 9: This shows maximum emissions from this line. Combined group limit on Pouring and Cooling of 28 tph, 128,000 tpy throughput due to max melt rate upstream
Note 10: Compliance with gaseous criteria pollutants to be demonstrated by summing emissions across all applicable stacks.

EXAMPLE CALCULATIONS:
Maximum Stack Emission Rate (lb/hr) {PM,PM-10} =(gr/acfm) x (acfm) x (1 lb / 7000 grains) x (60 min / 1 hr)
Maximum Stack Emission Rate (lb/hr) {Lead} =(gr/acfm) x (acfm) x (1 lb / 7000 grains) x (60 min / 1 hr) x (EF for Lead/EF for PM-10)
Maximum Stack Emissions Rate (lb/hr) {SOx,NOx, VOC, CO} =(Max. Rated Capacity ton/hr) x (EF in lb/ton) x (Capture Eff./100)
Maximum Annual (Ton/yr) PM, PM10 and lead stack Emission Rates = (lb/hr emission rate) x (hours of operation per year at max. rate) x (ton/2000 lbs)
Maximum Annual (ton/yr) SOx NOx, VOC and CO stack emissions= (Hourly stack emissions (lb/hr)/ hourly Process rate (ton/hr) x (Annual process rate (tons/yr) x (ton/2000 lbs)
Maximum Fugitive Emission Rate (lb/hr) = ((1 - Capture Efficiency/100) x (Emission Factor) x (Melt ton/hr) x (1-(Settling Factor)/100)
Maximum Annual Fugitive Emissions (ton/yr)= (Hourly fugitive emissions (lb/hr)/ hourly Process rate (ton/hr) x (Annual process rate (tons/yr) x (ton/2000 lbs)
Total Emission Rate (lb/hr) = (Maximum Stack Emission Rate lb/hr) + (Maximum Fugitive Emission Rate lb/hr)
Total Emission Rates Annual (TPY)= (annual stack emissions (ton/yr)) + (annual fugitive emissions (ton/yr))

Form AI-S003(5) Supplement
Potential to Emit
Emissions Calculations
East Jordan Foundry, LLC

Maximum Yearly Capacity
128,000 Tons/Year

Flow Diagram Designation
1230 Pouring & Cooling

Maximum Hourly Capacity
28.00 Tons/Hour

Process Description:
East Jordan Foundry, LLC
1230 Pouring & Cooling
Control Device: Baghouses A/B, D
SCC Code:
Control Device Outlet: 0.0020 gr/dscf gr/dscf
Airflow: 129,000 acfm acfm
Stack Gas Temperature: 100 °F

Facility Process Name:		Criteria Pollutants								
	1230 Pouring & Cooling									
Emission Factor Basis:		PM	PM10	PM2.5	SOx	NOx	VOC	CO	Lead	CO_2e
Emission Factors:	lb/ton	0.410	0.410	0.336	0.260	0.068	1.241	6.523	0.00048	24.654
(source)		Note 1	Note 1	Note 8	Note 2	Note 6	Note 5	Note 4	Note 3	Note 7
	Capture Efficiency	99.50	99.50	99.50	99.50	99.50	99.50	99.50	99.50	99.50
	Control Efficiency									
	Building Capt. Eff									
Maximum Stack Emission Rate:										
	Hourly (lb/hr)	See Controlling BH(s) for Stk Emissions			7.244	1.907	34.574	181.742	2.45E-03	686.854
	Annual (TPY)	See Controlling BH(s) for Stk Emissions			**16.557**	**4.360**	**79.027**	**415.410**	**3.67E-06**	**1569.951**
Maximum Fugitive Emission Rate:										
	Hourly (lb/hr)	0.057	0.057	0.047	0.036	0.010	0.174	0.913	6.71E-05	3.452
	Annual (TPY)	**0.131**	**0.131**	**0.108**	**0.083**	**0.022**	**0.397**	**2.087**	**1.53E-04**	**7.889**
Total Emission Rate:										
	Hourly (lb/hr)	0.057	0.057	0.047	7.280	1.917	34.748	182.655	2.51E-03	690.305
	Annual (TPY)	**0.131**	**0.131**	**0.108**	**16.640**	**4.381**	**79.424**	**417.497**	**1.57E-04**	**1577.840**

PROPOSED OPERATING SCHEDULE
24 HRS/DAY
6,000 HRS/YEAR

Note 1: Stack test at Quality Castings, Orrville, OH.
Note 2: 2019 Compliance Test plus 20% allowance for testing and measurement variability each.
Note 3: From Stack testing at Foundry in Mexico (CERP data)
Note 4: EJIW Foundry Stack Testing (Oct 2010). Results used with Wheland and Technikon information to distribute between melting, pouring, cooling and shakeout.
Note 5: EJIW Stack testing (March 2002) and Technikon #1410-117 FU. Includes Mold Making emissions.
Note 6: EJIW Stack Testing (March 2002, July 2010)
Note 7: EJIW-Ardmore Foundry Stack Testing (July 2010). Average rate calculated between SS-01 & SS-03. Methane and Nitrous Oxide emissions are not known. Background concentration of CO_2 was not considered.
Note 8: Emission factor based on USEPA PM Calculator (March 2012) PM to PM2.5 ratio and uncontrolled PM emission factor.
Note 9: This shows maximum emissions from this line. Combined group limit on Pouring and Cooling of 28 tph, 128,000 tpy throughput due to max melt rate upstream.
Note 10: Compliance with gaseous criteria pollutants to be demonstrated by summing emissions across all applicable stacks.

EXAMPLE CALCULATIONS:
Maximum Stack Emission Rate (lb/hr) {PM,PM-10} =(gr/acfm) x (acfm) x (1 lb / 7000 grains) x (60 min / 1 hr)
Maximum Stack Emission Rate (lb/hr) {Lead} =(gr/acfm) x (acfm) x (1 lb / 7000 grains) x (60 min / 1 hr) x (EF for Lead/EF for PM-10)
Maximum Stack Emissions Rate (lb/hr) {SOx,NOx, VOC, CO} =(Max. Rated Capacity ton/hr) x (EF in lb/ton) x (Capture Eff./100)
Maximum Annual (Ton/yr) PM, PM10 and lead stack Emission Rates = (lb/hr emission rate) x (hours of operation per year at max. rate) x (ton/2000 lbs)
Maximum Annual (ton/yr) SOx NOx, VOC and CO stack emissions= (Hourly stack emissions (lb/hr)/ hourly Process rate (ton/hr) x (Annual process rate (tons/yr) x (ton/2000 lbs)
Maximum Fugitive Emission Rate (lb/hr) = ((1 - Capture Efficiency/100) x (Emission Factor) x (Melt ton/hr) x (1-(Settling Factor)/100)
Maximum Annual Fugitive Emissions (ton/yr)= (Hourly fugitive emissions (lb/hr)/ hourly Process rate (ton/hr) x (Annual process rate (tons/yr) x (ton/2000 lbs)
Total Emission Rate (lb/hr) = (Maximum Stack Emission Rate lb/hr) + (Maximum Fugitive Emission Rate lb/hr)
Total Emission Rates Annual (TPY)= (annual stack emissions (ton/yr)) + (annual fugitive emissions (ton/yr))

Form AI-S003(5) Supplement
Potential to Emit
Emissions Calculations
East Jordan Foundry, LLC

Maximum Yearly Capacity
128,000 Tons/Year

Flow Diagram Designation
LML Pouring Operations
East Jordan Foundry, LLC
HAP Emission Calculations

Maximum Hourly Capacity
28.00 Tons/Hour

Control Device: Baghouses A/B
Capture Efficiency 99 %
Control Efficiency 99 %

	HAPs	CAS #	Emission Factor lb/ton	Controls Note 2	Emissions lbs/hr	Emissions tons/yr
Note 1	Antimony (Sb)	7440-36-0				
Note 1	Arsenic (As)	7440-38-2	1.14E-05	Baghouse	6.35E-06	**1.45E-05**
Note 1	Beryllium (Be)	7440-41-7				
Note 1	Cadmium (Cd)	7440-43-9	8.81E-06	Baghouse	4.91E-06	**1.12E-05**
Note 1	Chromium (Cr)	7440-47-3	6.72E-05	Baghouse	3.74E-05	**8.56E-05**
Note 1	Cobalt (Co)	7440-48-4	5.13E-03	Baghouse	2.86E-03	**6.53E-03**
Note 1	Lead (Pb)	7439-92-1				
	Manganese (Mn)	7439-96-5	2.04E-03	Baghouse	1.14E-03	**2.60E-03**
Note 1	Mercury (Hg)	7439-97-6				
Note 1	Nickel (Ni)	7440-02-0	No Data	Baghouse		
Note 1	Selenium (Se)	7782-49-2				
Note 1	Acetaldehyde	75-07-0	4.18E-04	Baghouse	1.17E-02	**2.68E-02**
	Dimethylnaphthalenes	28804-88-8				
	Cresol	1319-77-3				
	Methylnaphthalenes	90-12-0				
	Propionaldehyde	123-38-6				
	Methylene diphenyl diisocyanate (MDI)	101-68-8				
	4,4-methylenedianiline (MBA)	101-77-9				
Note 1	Formaldehyde	50-00-0	2.61E-04	None	7.31E-03	**1.67E-02**
Note 1	Cumene	98-82-8	1.33E-05	None	3.72E-04	**8.51E-04**
Note 1	Benzene	71-43-2	3.48E-03	None	9.74E-02	**2.23E-01**
Note 1	O-Xylene	95-47-6	2.70E-04	None	7.56E-03	**1.73E-02**
Note 1	M-Xylene	108-38-3	6.10E-04	None	1.71E-02	**3.90E-02**
Note 1	Phenol	108-95-2	4.60E-04	None	1.29E-02	**2.94E-02**
Note 1	Naphthalene	91-20-3	2.72E-04	None	7.62E-03	**1.74E-02**
Note 1	Ethyl Benzene	100-41-4	1.38E-04	None	3.86E-03	**8.83E-03**
	Hydrogen Flouride	7664-39-3				
Note 1	Toluene	108-88-3	1.52E-03	None	4.26E-02	**9.73E-02**
	P-Xylene	106-42-3				
	Hexane	110-54-3				
	Xylenes	1330-20-7			**2.46E-02**	**5.63E-02**
Note 1	o-Cresol	95-48-7	6.60E-06	None	1.85E-04	**4.22E-04**
Note 1	Styrene	100-42-5	8.28E-05	None	2.32E-03	**5.30E-03**
	Acetophenone	98-86-2				
	Dibenzofurans	132-64-9				
	Nitrobenzene	98-95-3				
Note 1	Total POMs		5.50E-04	None	0.015	**0.035**
	Total HAPs				**0.215**	**0.491**

Note 1: Emission factors taken from the document entitled "Foundry Process Emission Factors: Baseline Emissions from Automotive Foundries in Mexico"; (CERP-Mexico)
Note 2: HAPs that are particulates are captured by the Baghouse. A conservative control efficiency of 95% was utilized for the control efficiency of captured emissions. A capture rate of 90% was used.
Note 3: Max emissions from this line. Combined group limit on Pouring and Cooling of 28 tph, 128,000 tpy throughput due to max melt rate upstream

PROPOSED OPERATING SCHEDULE
24 HRS/DAY
6,000 HRS/YEAR

Form AI-S003(5) Supplement
Potential to Emit
Emissions Calculations
East Jordan Foundry, LLC

Maximum Yearly Capacity
128,000 Tons/Year

Flow Diagram Designation
1230 Pouring Operations
East Jordan Foundry, LLC
HAP Emission Calculations

Maximum Hourly Capacity
28.00 Tons/Hour

Control Device: Baghouses A/B
Capture Efficiency 99 %
Control Efficiency 99 %

	HAPs	CAS #	Emission Factor lb/ton	Controls Note 2	Emissions lbs/hr	Emissions tons/yr
Note 1	Antimony (Sb)	7440-36-0				
Note 1	Arsenic (As)	7440-38-2	1.14E-05	Baghouse	6.35E-06	**1.45E-05**
Note 1	Beryllium (Be)	7440-41-7				
Note 1	Cadmium (Cd)	7440-43-9	8.81E-06	Baghouse	4.91E-06	**1.12E-05**
Note 1	Chromium (Cr)	7440-47-3	6.72E-05	Baghouse	3.74E-05	**8.56E-05**
Note 1	Cobalt (Co)	7440-48-4	5.13E-03	Baghouse	2.86E-03	**6.53E-03**
Note 1	Lead (Pb)	7439-92-1				
	Manganese (Mn)	7439-96-5	2.04E-03	Baghouse	1.14E-03	**2.60E-03**
Note 1	Mercury (Hg)	7439-97-6				
Note 1	Nickel (Ni)	7440-02-0	No Data	Baghouse		
Note 1	Selenium (Se)	7782-49-2				
Note 1	Acetaldehyde	75-07-0	4.18E-04	Baghouse	1.17E-02	**2.68E-02**
	Dimethylnaphthalenes	28804-88-8				
	Cresol	1319-77-3				
	Methylnaphthalenes	90-12-0				
	Propionaldehyde	123-38-6				
	Methylene diphenyl diisocyanate (MDI)	101-68-8				
	4,4-methylenedianiline (MBA)	101-77-9				
Note 1	Formaldehyde	50-00-0	2.61E-04	None	7.31E-03	**1.67E-02**
Note 1	Cumene	98-82-8	1.33E-05	None	3.72E-04	**8.51E-04**
Note 1	Benzene	71-43-2	3.48E-03	None	9.74E-02	**2.23E-01**
Note 1	O-Xylene	95-47-6	2.70E-04	None	7.56E-03	**1.73E-02**
Note 1	M-Xylene	108-38-3	6.10E-04	None	1.71E-02	**3.90E-02**
Note 1	Phenol	108-95-2	4.60E-04	None	1.29E-02	**2.94E-02**
Note 1	Naphthalene	91-20-3	2.72E-04	None	7.62E-03	**1.74E-02**
Note 1	Ethyl Benzene	100-41-4	1.38E-04	None	3.86E-03	**8.83E-03**
	Hydrogen Flouride	7664-39-3				
Note 1	Toluene	108-88-3	1.52E-03	None	4.26E-02	**9.73E-02**
	P-Xylene	106-42-3				
	Hexane	110-54-3				
	Xylenes	1330-20-7			**2.46E-02**	**5.63E-02**
Note 1	o-Cresol	95-48-7	6.60E-06	None	1.85E-04	**4.22E-04**
Note 1	Styrene	100-42-5	8.28E-05	None	2.32E-03	**5.30E-03**
	Acetophenone	98-86-2				
	Dibenzofurans	132-64-9				
	Nitrobenzene	98-95-3				
Note 1	Total POMs		5.50E-04	None	0.015	**0.035**
	Total HAPs				**0.215**	**0.491**

Note 1: Emission factors taken from the document entitled "Foundry Process Emission Factors: Baseline Emissions from Automotive Foundries in Mexico"; (CERP-Mexico)

Note 2: HAPs that are particulates are captured by the Baghouse. A conservative control efficiency of 95% was utilized for the control efficiency of captured emissions. A capture rate of 90% was used.

Note 3: Max emissions from this line. Combined group limit on Pouring and Cooling of 28 tph, 128,000 tpy throughput due to max melt rate upstream

PROPOSED OPERATING SCHEDULE
24 HRS/DAY
6,000 HRS/YEAR

Form AI-S003(5) Supplement
Potential to Emit
Emissions Calculations
East Jordan Foundry, LLC

Maximum Yearly Capacity
128,000 Tons/Year

Flow Diagram Designation
LML Mold Cooling Operations
East Jordan Foundry, LLC
HAP Emission Calculations

Maximum Hourly Capacity
28.00 Tons/Hour

Control Device: aghouses A/B, D
Capture Efficiency 100 %
Control Efficiency 99 %

	HAPs	CAS #	Emission Factor lb/ton	Controls Note 2	Emissions lbs/hr	Emissions tons/yr
Note 1	Antimony (Sb)	7440-36-0	6.21E-05	Baghouse	1.74E-05	**3.97E-05**
	Arsenic (As)	7440-38-2				
	Beryllium (Be)	7440-41-7				
Note 1	Cadmium (Cd)	7440-43-9	4.37E-05	Baghouse	1.22E-05	**2.80E-05**
Note 1	Chromium (Cr)	7440-47-3	3.12E-04	Baghouse	8.74E-05	**2.00E-04**
Note 1	Cobalt (Co)	7440-48-4	1.72E-04	Baghouse	4.82E-05	**1.10E-04**
	Lead (Pb)	7439-92-1				
Note 1	Manganese (Mn)	7439-96-5	1.12E-03	Baghouse	3.14E-04	**7.17E-04**
	Mercury (Hg)	7439-97-6				
Note 1	Nickel (Ni)	7440-02-0	4.32E-04	Baghouse	1.21E-04	**2.76E-04**
Note 1	Selenium (Se)	7782-49-2	2.46E-05	Baghouse	6.89E-06	
Note 1	Acetaldehyde	75-07-0	4.30E-03	Baghouse	1.20E-01	**2.75E-01**
	Dimethylnaphthalenes	28804-88-8				
	Cresol	1319-77-3				
	Methylnaphthalenes	90-12-0				
Note 1	Propionaldehyde	123-38-6	5.68E-05	Baghouse	1.59E-03	**3.64E-03**
	Methylene diphenyl diisocyanate (MDI)	101-68-8				
	4,4-methylenedianiline (MBA)	101-77-9				
Note 1	Formaldehyde	50-00-0	2.67E-03	None	7.48E-02	**1.71E-01**
Note 1	Cumene	98-82-8	1.92E-04	None	5.38E-03	**1.23E-02**
Note 1	Benzene	71-43-2	4.53E-02	None	1.27E+00	**2.90E+00**
Note 1	O-Xylene	95-47-6	4.93E-03	None	1.38E-01	**3.16E-01**
Note 1	M-Xylene	108-38-3	9.55E-03	None	2.67E-01	**6.11E-01**
Note 1	Phenol	108-95-2	8.64E-03	None	2.42E-01	**5.53E-01**
Note 1	Naphthalene	91-20-3	3.87E-03	None	1.08E-01	**2.48E-01**
Note 1	Ethyl Benzene	100-41-4	2.34E-03	None	6.55E-02	**1.50E-01**
	Hydrogen Flouride	7664-39-3				
Note 1	Toluene	108-88-3	2.44E-02	None	6.83E-01	**1.56E+00**
	P-Xylene	106-42-3				
	Hexane	110-54-3				
	Xylenes	1330-20-7			4.05E-01	**9.27E-01**
Note 1	o-Cresol	95-48-7	1.51E-03	None	4.23E-02	**9.66E-02**
Note 1	Styrene	100-42-5	8.26E-04	None	2.31E-02	**5.29E-02**
Note 1	Acetophenone	98-86-2	7.90E-04	None	2.21E-02	**5.06E-02**
Note 1	Dibenzofurans	132-64-9	5.39E-05	None	1.51E-03	**3.45E-03**
Note 1	Nitrobenzene	98-95-3	2.01E-05	None	5.63E-04	**1.29E-03**
Note 1	Total POMs		8.99E-03	None	0.252	**0.575**
	Total HAPs				**3.041**	**6.951**

Note 1: Emission factors taken from the document entitled "Foundry Process Emission Factors: Baseline Emissions from Automotive Foundries in Mexico"; (CERP-Mexico)

Note 2: HAPs that are particulates are captured by the Baghouse. A conservative control efficiency of 95% was utilized for the control efficiency of captured emissions. A capture rate of 98% was used.

Note 3: Max emissions from this line. Combined group limit on Pouring and Cooling of 28 tph, 128,000 tpy throughput due to max melt rate upstream

PROPOSED OPERATING SCHEDULE
24 HRS/DAY
6,000 HRS/YEAR

Form AI-S003(5) Supplement
Potential to Emit
Emissions Calculations
East Jordan Foundry, LLC

Maximum Yearly Capacity
128,000 Tons/Year

Flow Diagram Designation
1230 Mold Cooling Operations
East Jordan Foundry, LLC
HAP Emission Calculations

Maximum Hourly Capacity
28.00 Tons/Hour

Control Device: aghouses A/B, D
Capture Efficiency 100 %
Control Efficiency 99 %

	HAPs	CAS #	Emission Factor lb/ton	Controls Note 2	Emissions lbs/hr	Emissions tons/yr
Note 1	Antimony (Sb)	7440-36-0	6.21E-05	Baghouse	1.74E-05	**3.97E-05**
	Arsenic (As)	7440-38-2				
	Beryllium (Be)	7440-41-7				
Note 1	Cadmium (Cd)	7440-43-9	4.37E-05	Baghouse	1.22E-05	**2.80E-05**
Note 1	Chromium (Cr)	7440-47-3	3.12E-04	Baghouse	8.74E-05	**2.00E-04**
Note 1	Cobalt (Co)	7440-48-4	1.72E-04	Baghouse	4.82E-05	**1.10E-04**
	Lead (Pb)	7439-92-1				
Note 1	Manganese (Mn)	7439-96-5	1.12E-03	Baghouse	3.14E-04	**7.17E-04**
	Mercury (Hg)	7439-97-6				
Note 1	Nickel (Ni)	7440-02-0	4.32E-04	Baghouse	1.21E-04	**2.76E-04**
Note 1	Selenium (Se)	7782-49-2	2.46E-05	Baghouse	6.89E-06	
Note 1	Acetaldehyde	75-07-0	4.30E-03	Baghouse	1.20E-01	**2.75E-01**
	Dimethylnaphthalenes	28804-88-8				
	Cresol	1319-77-3				
	Methylnaphthalenes	90-12-0				
Note 1	Propionaldehyde	123-38-6	5.68E-05	Baghouse	1.59E-03	**3.64E-03**
	Methylene diphenyl diisocyanate (MDI)	101-68-8				
	4,4-methylenedianiline (MBA)	101-77-9				
Note 1	Formaldehyde	50-00-0	2.67E-03	None	7.48E-02	**1.71E-01**
Note 1	Cumene	98-82-8	1.92E-04	None	5.38E-03	**1.23E-02**
Note 1	Benzene	71-43-2	4.53E-02	None	1.27E+00	**2.90E+00**
Note 1	O-Xylene	95-47-6	4.93E-03	None	1.38E-01	**3.16E-01**
Note 1	M-Xylene	108-38-3	9.55E-03	None	2.67E-01	**6.11E-01**
Note 1	Phenol	108-95-2	8.64E-03	None	2.42E-01	**5.53E-01**
Note 1	Naphthalene	91-20-3	3.87E-03	None	1.08E-01	**2.48E-01**
Note 1	Ethyl Benzene	100-41-4	2.34E-03	None	6.55E-02	**1.50E-01**
	Hydrogen Flouride	7664-39-3				
Note 1	Toluene	108-88-3	2.44E-02	None	6.83E-01	**1.56E+00**
	P-Xylene	106-42-3				
	Hexane	110-54-3				
	Xylenes	1330-20-7			4.05E-01	**9.27E-01**
Note 1	o-Cresol	95-48-7	1.51E-03	None	4.23E-02	**9.66E-02**
Note 1	Styrene	100-42-5	8.26E-04	None	2.31E-02	**5.29E-02**
Note 1	Acetophenone	98-86-2	7.90E-04	None	2.21E-02	**5.06E-02**
Note 1	Dibenzofurans	132-64-9	5.39E-05	None	1.51E-03	**3.45E-03**
Note 1	Nitrobenzene	98-95-3	2.01E-05	None	5.63E-04	**1.29E-03**
Note 1	Total POMs		8.99E-03	None	0.252	**0.575**
	Total HAPs				**3.041**	**6.951**

Note 1: Emission factors taken from the document entitled "Foundry Process Emission Factors: Baseline Emissions from Automotive Foundries in Mexico"; (CERP-Mexico)

Note 2: HAPs that are particulates are captured by the Baghouse. A conservative control efficiency of 95% was utilized for the control efficiency of captured emissions. A capture rate of 98% was used.

Note 3: Max emissions from this line. Combined group limit on Pouring and Cooling of 28 tph, 128,000 tpy throughput due to max melt rate upstream

PROPOSED OPERATING SCHEDULE
24 HRS/DAY
6,000 HRS/YEAR

Form AI-S003(5) Supplement
Potential to Emit
Emissions Calculations
East Jordan Foundry, LLC

Maximum Yearly Capacity
128,000 Tons/Year

Flow Diagram Designation
LML Shakeout

Maximum Hourly Capacity
28.00 Tons/Hour

Process Description:
East Jordan Foundry, LLC
LML Shakeout
Control Device: Baghouses C, D, E
SCC Code:
Control Device Outlet: gr/dscf gr/dscf
Airflow: acfm acfm
Stack Gas Temperature: 100 °F

Facility Process Name:			Criteria Pollutants								
	LML Shakeout										
Emission Factor Basis:			PM	PM10	PM2.5	SOx	NOx	VOC	CO	Lead	CO_2e
Emission Factors:		lb/ton	3.20	2.24	1.34		0.002	0.528	1.592	1.26E-04	
(source)			Note 1	Note 6	Note 6		Note 5	Note 4	Note 2	Note 3	Note 4
		Capture Efficiency	100.00	100.00	100.00		100.00	100.00	100.00	100.00	
		Control Efficiency									
		Building Capt. Eff									
Maximum Stack Emission Rate:											
	Hourly (lb/hr)		See Controlling BH(s) for Stk Emissions				0.056	14.784	44.574	3.53E-03	
	Annual (TPY)		See Controlling BH(s) for Stk Emissions				**0.128**	**33.792**	**101.883**	**8.06E-03**	
Maximum Fugitive Emission Rate:											
	Hourly (lb/hr)										
	Annual (TPY)										
Total Emission Rate:											
	Hourly (lb/hr)						0.056	14.784	44.574	3.53E-03	
	Annual (TPY)						**0.128**	**33.792**	**101.883**	**8.06E-03**	

PROPOSED OPERATING SCHEDULE
22 HRS/DAY
6,000 HRS/YEAR

Note 1: Emission factor from FIRE 6.25 SCC 3-04-003-31
Note 2: EJIW-Ardmore Foundry Stack Testing (Oct 2010). Results used with Wheland and Technikon information to distribute between melting, pouring, cooling and shakeout.
Note 3: Factors: Baseline Emissions from Automotive Foundries in Mexico"
Note 4: C02e emissions included in Pouring & Mold Cooling Tab
Note 5: Emission factor from EJIW stack test (July 2010)
Note 6: Emission factor based on USEPA PM Calculator (March 2012) PM to PM2.5 ratio and uncontrolled PM emission factor.
Note 7: Max emissions from this line. Combined group limit on Shakeout of 28 tph, 128,000 tpy throughput due to max melt rate upstream

EXAMPLE CALCULATIONS:
Maximum Stack Emission Rate (lb/hr) {PM,PM-10} =(gr/acfm) x (acfm) x (1 lb / 7000 grains) x (60 min / 1 hr)
Maximum Stack Emission Rate (lb/hr) {Lead} =(gr/acfm) x (acfm) x (1 lb / 7000 grains) x (60 min / 1 hr) x (EF for Lead/EF for PM-10)
Maximum Stack Emissions Rate (lb/hr) {VOC, CO} =(Max. Rated Capacity ton/hr) x (EF in lb/ton) x (Capture Eff./100)
Maximum Annual (Ton/yr) PM, PM10 and lead stack Emission Rates = (lb/hr emission rate) x (hours of operation per year at max. rate) x (ton/2000 lbs)
Maximum Annual (ton/yr) VOC and CO stack emissions= (Hourly stack emissions (lb/hr)/ hourly Process rate (ton/hr) x (Annual process rate (tons/yr) x (ton/2000 lbs)
Maximum Fugitive Emission Rate (lb/hr) = ((1 - Capture Efficiency/100) x (Emission Factor) x (Melt ton/hr) x (1-(Settling Factor)/100)
Maximum Annual Fugitive Emissions (ton/yr)= (Hourly fugitive emissions (lb/hr)/ hourly Process rate (ton/hr) x (Annual process rate (tons/yr) x (ton/2000 lbs)
Total Emission Rate (lb/hr) = (Maximum Stack Emission Rate lb/hr) + (Maximum Fugitive Emission Rate lb/hr)
Total Emission Rates Annual (TPY)= (annual stack emissions (ton/yr)) + (annual fugitive emissions (ton/yr))

Form AI-S003(5) Supplement
Potential to Emit
Emissions Calculations
East Jordan Foundry, LLC

Maximum Yearly Capacity
128,000 Tons/Year

Flow Diagram Designation
1230 Shakeout

Maximum Hourly Capacity
28.00 Tons/Hour

Process Description:
East Jordan Foundry, LLC
1230 Shakeout
Control Device: Baghouses C, D, E
SCC Code:
Control Device Outlet: gr/dscf gr/dscf
Airflow: acfm acfm
Stack Gas Temperature: 100 °F

Facility Process Name:			**Criteria Pollutants**								
1230 Shakeout											
Emission Factor Basis:			**PM**	**PM10**	**PM2.5**	**SOx**	**NOx**	**VOC**	**CO**	**Lead**	**CO_2e**
Emission Factors:	lb/ton		3.20	2.24	1.34		0.002	0.528	1.592	1.26E-04	
(source)			Note 1	Note 6	Note 6		Note 5	Note 4	Note 2	Note 3	Note 4
		Capture Efficiency	100.00	100.00	100.00		100.00	100.00	100.00	100.00	
		Control Efficiency									
		Building Capt. Eff									
Maximum Stack Emission Rate:											
	Hourly (lb/hr)		See Controlling BH(s) for Stk Emissions				0.056	14.784	44.574	3.53E-03	
	Annual (TPY)		See Controlling BH(s) for Stk Emissions				**0.128**	**33.792**	**101.883**	**8.06E-03**	
Maximum Fugitive Emission Rate:											
	Hourly (lb/hr)										
	Annual (TPY)										
Total Emission Rate:											
	Hourly (lb/hr)						0.056	14.784	44.574	3.53E-03	
	Annual (TPY)						**0.128**	**33.792**	**101.883**	**8.06E-03**	

PROPOSED OPERATING SCHEDULE
22 HRS/DAY
6,000 HRS/YEAR

Note 1: Emission factor from FIRE 6.25 SCC 3-04-003-31
Note 2: EJIW-Ardmore Foundry Stack Testing (Oct 2010). Results used with Wheland and Technikon information to distribute between melting, pouring, cooling and shakeout.
Note 3: Factors: Baseline Emissions from Automotive Foundries in Mexico"
Note 4: C02e emissions included in Pouring & Mold Cooling Tab
Note 5: Emission factor from EJIW stack test (July 2010)
Note 6: Emission factor based on USEPA PM Calculator (March 2012) PM to PM2.5 ratio and uncontrolled PM emission factor.
Note 7: Max emissions from this line. Combined group limit on Shakeout of 28 tph, 128,000 tpy throughput due to max melt rate upstream

EXAMPLE CALCULATIONS:
Maximum Stack Emission Rate (lb/hr) {PM,PM-10} =(gr/acfm) x (acfm) x (1 lb / 7000 grains) x (60 min / 1 hr)
Maximum Stack Emission Rate (lb/hr) {Lead} =(gr/acfm) x (acfm) x (1 lb / 7000 grains) x (60 min / 1 hr) x (EF for Lead/EF for PM-10)
Maximum Stack Emissions Rate (lb/hr) {VOC, CO} =(Max. Rated Capacity ton/hr) x (EF in lb/ton) x (Capture Eff./100)
Maximum Annual (Ton/yr) PM, PM10 and lead stack Emission Rates = (lb/hr emission rate) x (hours of operation per year at max. rate) x (ton/2000 lbs)
Maximum Annual (ton/yr) VOC and CO stack emissions= (Hourly stack emissions (lb/hr)/ hourly Process rate (ton/hr) x (Annual process rate (tons/yr) x (ton/2000 lbs)
Maximum Fugitive Emission Rate (lb/hr) = ((1 - Capture Efficiency/100) x (Emission Factor) x (Melt ton/hr) x (1-(Settling Factor)/100)
Maximum Annual Fugitive Emissions (ton/yr)= (Hourly fugitive emissions (lb/hr)/ hourly Process rate (ton/hr) x (Annual process rate (tons/yr) x (ton/2000 lbs)
Total Emission Rate (lb/hr) = (Maximum Stack Emission Rate lb/hr) + (Maximum Fugitive Emission Rate lb/hr)
Total Emission Rates Annual (TPY)= (annual stack emissions (ton/yr)) + (annual fugitive emissions (ton/yr))

Form AI-S003(5) Supplement
Potential to Emit
Emissions Calculations
East Jordan Foundry, LLC

Maximum Yearly Capacity
128,000 Tons/Year

Maximum Hourly Capacity
28.00 Tons/Hour

Flow Diagram Designation
LML Shakeout HAPS
East Jordan Foundry, LLC
HAP Emission Calculations

Control Device: Baghouses C, D, E
Capture Efficiency 100 %
Control Efficiency 95 %

	HAPs	CAS #	Emission Factor lb/ton	Controls Note 2	Emissions lbs/hr	Emissions tons/yr
Note 1	Antimony (Sb)	7440-36-0	7.59E-06	Baghouse	1.06E-05	**2.43E-05**
	Arsenic (As)	7440-38-2				
	Beryllium (Be)	7440-41-7				
Note 1	Cadmium (Cd)	7440-43-9	1.67E-05	Baghouse	2.34E-05	**5.34E-05**
Note 1	Chromium (Cr)	7440-47-3	3.00E-04	Baghouse	4.20E-04	**9.60E-04**
Note 1	Cobalt (Co)	7440-48-4	2.49E-04	Baghouse	3.49E-04	**7.97E-04**
	Lead (Pb)	7439-92-1				
Note 1	Manganese (Mn)	7439-96-5	7.47E-04	Baghouse	1.05E-03	**2.39E-03**
	Mercury (Hg)	7439-97-6				
Note 1	Nickel (Ni)	7440-02-0	6.66E-04	Baghouse	9.32E-04	**2.13E-03**
	Selenium (Se)	7782-49-2				
Note 1	Acetaldehyde	75-07-0	5.78E-02	None	1.62E+00	**3.70E+00**
	Dimethylnaphthalenes	28804-88-8				
	Cresol	1319-77-3				
	Methylnaphthalenes	90-12-0				
Note 1	Propionaldehyde	123-38-6	5.70E-03	None	1.60E-01	**3.65E-01**
	Methylene diphenyl diisocyanate (MDI)	101-68-8				
	4,4-methylenedianiline (MBA)	101-77-9				
Note 1	Formaldehyde	50-00-0	2.57E-02	None	7.20E-01	**1.64E+00**
Note 1	Cumene	98-82-8	3.82E-04	None	1.07E-02	**2.44E-02**
Note 1	Benzene	71-43-2	2.68E-02	None	7.50E-01	**1.72E+00**
Note 1	O-Xylene	95-47-6	5.32E-03	None	1.49E-01	**3.40E-01**
Note 1	M-Xylene	108-38-3	1.25E-02	None	3.50E-01	**8.00E-01**
Note 1	Phenol	108-95-2	2.80E-02	None	7.84E-01	**1.79E+00**
Note 1	Naphthalene	91-20-3	8.37E-03	None	2.34E-01	**5.36E-01**
Note 1	Ethyl Benzene	100-41-4	2.91E-03	None	8.15E-02	**1.86E-01**
	Hydrogen Flouride	7664-39-3				
Note 1	Toluene	108-88-3	2.21E-02	None	6.19E-01	**1.41E+00**
	P-Xylene	106-42-3				
	Hexane	110-54-3				
Note 1	Xylenes	1330-20-7	1.78E-02	None	4.98E-01	**1.14E+00**
Note 1	o-Cresol	95-48-7	1.40E-02	None	3.92E-01	**8.96E-01**
Note 1	Styrene	100-42-5	4.81E-03	None	1.35E-01	**3.08E-01**
Note 1	Acetophenone	98-86-2	7.92E-04	None	2.22E-02	**5.07E-02**
Note 1	Dibenzofurans	132-64-9	3.34E-04	None	9.35E-03	**2.14E-02**
	Nitrobenzene	98-95-3				
Note 1	Total POMs		2.21E-02	None	0.619	**1.414**
	Total HAPs				**6.536**	**14.939**

Note 1: Emission factors taken from the document entitled "Foundry Process Emission Factors: Baseline Emissions from Automotive Foundries in Mexico"; (CERP-Mexico)

Note 2: HAPs that are particulates are captured by the Baghouse. A conservative control efficiency of 95% was utilized with 99% capture for the emission calculations.

Note 3: Max emissions from this line. Combined group limit on Shakeout of 28 tph, 128,000 tpy throughput due to max melt rate upstream

PROPOSED OPERATING SCHEDULE
22 HRS/DAY
6,000 HRS/YEAR

Form AI-S003(5) Supplement
Potential to Emit
Emissions Calculations
East Jordan Foundry, LLC

Maximum Yearly Capacity
128,000 Tons/Year

Maximum Hourly Capacity
28.00 Tons/Hour

Flow Diagram Designation
1230 Shakeout HAPS
East Jordan Foundry, LLC
HAP Emission Calculations

Control Device: Baghouses C, D, E
Capture Efficiency 100 %
Control Efficiency 95 %

	HAPs	CAS #	Emission Factor lb/ton	Controls Note 2	Emissions lbs/hr	Emissions tons/yr
Note 1	Antimony (Sb)	7440-36-0	7.59E-06	Baghouse	1.06E-05	**2.43E-05**
	Arsenic (As)	7440-38-2				
	Beryllium (Be)	7440-41-7				
Note 1	Cadmium (Cd)	7440-43-9	1.67E-05	Baghouse	2.34E-05	**5.34E-05**
Note 1	Chromium (Cr)	7440-47-3	3.00E-04	Baghouse	4.20E-04	**9.60E-04**
Note 1	Cobalt (Co)	7440-48-4	2.49E-04	Baghouse	3.49E-04	**7.97E-04**
	Lead (Pb)	7439-92-1				
Note 1	Manganese (Mn)	7439-96-5	7.47E-04	Baghouse	1.05E-03	**2.39E-03**
	Mercury (Hg)	7439-97-6				
Note 1	Nickel (Ni)	7440-02-0	6.66E-04	Baghouse	9.32E-04	**2.13E-03**
	Selenium (Se)	7782-49-2				
Note 1	Acetaldehyde	75-07-0	5.78E-02	None	1.62E+00	**3.70E+00**
	Dimethylnaphthalenes	28804-88-8				
	Cresol	1319-77-3				
	Methylnaphthalenes	90-12-0				
Note 1	Propionaldehyde	123-38-6	5.70E-03	None	1.60E-01	**3.65E-01**
	Methylene diphenyl diisocyanate (MDI)	101-68-8				
	4,4-methylenedianiline (MBA)	101-77-9				
Note 1	Formaldehyde	50-00-0	2.57E-02	None	7.20E-01	**1.64E+00**
Note 1	Cumene	98-82-8	3.82E-04	None	1.07E-02	**2.44E-02**
Note 1	Benzene	71-43-2	2.68E-02	None	7.50E-01	**1.72E+00**
Note 1	O-Xylene	95-47-6	5.32E-03	None	1.49E-01	**3.40E-01**
Note 1	M-Xylene	108-38-3	1.25E-02	None	3.50E-01	**8.00E-01**
Note 1	Phenol	108-95-2	2.80E-02	None	7.84E-01	**1.79E+00**
Note 1	Naphthalene	91-20-3	8.37E-03	None	2.34E-01	**5.36E-01**
Note 1	Ethyl Benzene	100-41-4	2.91E-03	None	8.15E-02	**1.86E-01**
	Hydrogen Flouride	7664-39-3				
Note 1	Toluene	108-88-3	2.21E-02	None	6.19E-01	**1.41E+00**
	P-Xylene	106-42-3				
	Hexane	110-54-3				
Note 1	Xylenes	1330-20-7	1.78E-02	None	4.98E-01	**1.14E+00**
Note 1	o-Cresol	95-48-7	1.40E-02	None	3.92E-01	**8.96E-01**
Note 1	Styrene	100-42-5	4.81E-03	None	1.35E-01	**3.08E-01**
Note 1	Acetophenone	98-86-2	7.92E-04	None	2.22E-02	**5.07E-02**
Note 1	Dibenzofurans	132-64-9	3.34E-04	None	9.35E-03	**2.14E-02**
	Nitrobenzene	98-95-3				
Note 1	Total POMs		2.21E-02	None	0.619	**1.414**
	Total HAPs				**6.536**	**14.939**

Note 1: Emission factors taken from the document entitled "Foundry Process Emission Factors: Baseline Emissions from Automotive Foundries in Mexico"; (CERP-Mexico)

Note 2: HAPs that are particulates are captured by the Baghouse. A conservative control efficiency of 95% was utilized with 99% capture for the emission calculations.

Note 3: Max emissions from this line. Combined group limit on Shakeout of 28 tph, 128,000 tpy throughput due to max melt rate upstream

PROPOSED OPERATING SCHEDULE
22 HRS/DAY
6,000 HRS/YEAR

Form AI-S003(5) Supplement
Potential to Emit
Emissions Calculations
East Jordan Foundry, LLC

Maximum Yearly Capacity
128,000 Tons/Year

Flow Diagram Designation
Shotblast

Maximum Hourly Capacity
28.00 Tons/Hour

Process Description:
East Jordan Foundry, LLC
Shotblast
Control Device: Baghouses H/J
SCC Code:
Control Device Outlet: gr/dscf
Airflow: acfm
Stack Gas Temperature: 100 °F

Facility Process Name: Shotblast	Criteria Pollutants								
Emission Factor Basis:	**PM**	**PM10**	**PM2.5**	**SOx**	**NOx**	**VOC**	**CO**	**Lead**	**CO_2e**
Emission Factors: lb/ton	15.50	1.70	1.70						
(source)	Note 1	Note 2	Note 3						
Capture Efficiency	100.00	100.00	100.00						
Control Efficiency									
Building Capt. Eff									
Maximum Stack Emission Rate:									
Hourly (lb/hr)	See Controlling BH(s) for Stk Emissions								
Annual (TPY)	See Controlling BH(s) for Stk Emissions								
Maximum Fugitive Emission Rate:									
Hourly (lb/hr)									
Annual (TPY)									
Total Emission Rate:									
Hourly (lb/hr)									
Annual (TPY)									

PROPOSED OPERATING SCHEDULE
24 HRS/DAY
6,000 HRS/YEAR

Note 1: Emission factor from Bernard S. Gutow article
Note 2: Emission factor from FIRE 6.25 SCC 3-04-003-40
Note 3: Assumes $PM^{2.5}$ is equal to PM_{10}

EXAMPLE CALCULATIONS:
Maximum Stack Emission Rate (lb/hr) {PM,PM-10} =(gr/acfm) x (acfm) x (1 lb / 7000 grains) x (60 min / 1 hr)
Maximum Annual (Ton/yr) stack Emission Rates = (lb/hr emission rate) x (hours of operation per year at max. rate) x (ton/2000 lbs)
Maximum Fugitive Emission Rate (lb/hr) = ((1 - Capture Efficiency/100) x (Emission Factor) x (Melt ton/hr) x (1-(Settling Factor)/100)
Maximum Annual Fugitive Emissions (ton/yr)= (Hourly fugitive emissions (lb/hr)/ hourly Process rate (ton/hr) x (Annual process rate (tons/yr) x (ton/2000 lbs)
Total Emission Rate (lb/hr) = (Maximum Stack Emission Rate lb/hr) + (Maximum Fugitive Emission Rate lb/hr)
Total Emission Rates Annual (TPY)= (annual stack emissions (ton/yr)) + (annual fugitive emissions (ton/yr))

Form AI-S003(5) Supplement
Potential to Emit
Emissions Calculations
East Jordan Foundry, LLC

Maximum Yearly Capacity
128,000 Tons/Year

Flow Diagram Designation
Grinding

Maximum Hourly Capacity
28.00 Tons/Hour

Process Description:
East Jordan Foundry, LLC
Grinding
Control Device: Baghouses H/J
SCC Code:
Control Device Outlet: gr/dscf
Airflow: acfm
Stack Gas Temperature: 100 °F

Facility Process Name:		Criteria Pollutants								
Grinding										
Emission Factor Basis:		PM	PM10	PM2.5	SOx	NOx	VOC	CO	Lead	CO_2e
Emission Factors:	lb/ton	1.60	0.005	0.005						
(source)		Note 1	Note 2	Note 3						
	Capture Efficiency	99.00	99.00	99.00						
	Control Efficiency									
	Building Capt. Eff	70.00	70.00	70.00						
Maximum Stack Emission Rate:										
Hourly (lb/hr)		See Controlling BH(s) for Stk Emissions								
Annual (TPY)		See Controlling BH(s) for Stk Emissions								
Maximum Fugitive Emission Rate:										
Hourly (lb/hr)		0.134	0.000	0.000						
Annual (TPY)		**0.307**	**0.001**	**0.001**						
Total Emission Rate:										
Hourly (lb/hr)		0.134	0.000	0.000						
Annual (TPY)		**0.307**	**0.001**	**0.001**						

PROPOSED OPERATING SCHEDULE
24 HRS/DAY
6,000 HRS/YEAR

Note 1: Emission factor from Bernard S. Gutow article
Note 2: Emission factor from FIRE 6.25 SCC 3-04-003-60
Note 3: Assumes PM2.5 is equal to PM10

EXAMPLE CALCULATIONS:
Maximum Stack Emission Rate (lb/hr) {PM,PM-10} =(gr/acfm) x (acfm) x (1 lb / 7000 grains) x (60 min / 1 hr)
Maximum Annual (Ton/yr) stack Emission Rates = (lb/hr emission rate) x (hours of operation per year at max. rate) x (ton/2000 lbs)
Maximum Fugitive Emission Rate (lb/hr) = ((1 - Capture Efficiency/100) x (Emission Factor) x (Melt ton/hr) x (1-(Settling Factor)/100)
Maximum Annual Fugitive Emissions (ton/yr)= (Hourly fugitive emissions (lb/hr)/ hourly Process rate (ton/hr) x (Annual process rate (tons/yr) x (ton/2000 lbs)
Total Emission Rate (lb/hr) = (Maximum Stack Emission Rate lb/hr) + (Maximum Fugitive Emission Rate lb/hr)
Total Emission Rates Annual (TPY)= (annual stack emissions (ton/yr)) + (annual fugitive emissions (ton/yr))

Form AI-S003(5) Supplement
Potential to Emit
Emissions Calculations
East Jordan Foundry, LLC

Maximum Yearly Capacity
1,920,000 Tons/Year

Flow Diagram Designation
Sand Handling & Storage (H&S)

Maximum Hourly Capacity
390.00 Tons/Hour

Process Description:
East Jordan Foundry, LLC
Sand Handling & Storage (H&S)
Control Device: Baghouse E, F, G, H/J
SCC Code:
Control Device Outlet: gr/dscf
Airflow: acfm
Stack Gas Temperature: 100 °F

Facility Process Name:			Criteria Pollutants								
	Sand Handling & Storage (H&S)										
Emission Factor Basis:			PM	PM10	PM2.5	SOx	NOx	VOC	CO	Lead	CO_2e
Emission Factors:		lb/ton	3.60	0.54	0.54						
(source)			Note 1,3	Note 1,3	Note 2,3			Note 4			
		Capture Efficiency	99.90	99.90	99.90						
		Control Efficiency									
		Building Capt. Eff	70.00	70.00	70.00						
Maximum Stack Emission Rate:											
	Hourly (lb/hr)		See Controlling BH(s) for Stk Emissions								
	Annual (TPY)		See Controlling BH(s) for Stk Emissions								
Maximum Fugitive Emission Rate:											
	Hourly (lb/hr)		0.421	0.063	0.063						
	Annual (TPY)		**1.037**	**0.156**	**0.156**						
Total Emission Rate:											
	Hourly (lb/hr)		0.421	0.063	0.063						
	Annual (TPY)		**1.037**	**0.156**	**0.156**						

PROPOSED OPERATING SCHEDULE
22 HRS/DAY
6,000 HRS/YEAR

Note 1: Emission factor from FIRE 6.25 SCC 3-04-003-50
Note 2: Assumes PM2.5 is equal to PM10
Note 3: Includes mold making PM emissions.
Note 4: Mold making VOC emissions included with Pouring & Cooling VOC EF.

EXAMPLE CALCULATIONS:
Maximum Stack Emission Rate (lb/hr) {PM,PM-10} =(gr/acfm) x (acfm) x (1 lb / 7000 grains) x (60 min / 1 hr)
Maximum Annual (Ton/yr) stack Emission Rates = (lb/hr emission rate) x (hours of operation per year at max. rate) x (ton/2000 lbs)
Maximum Fugitive Emission Rate (lb/hr) = ((1 - Capture Efficiency/100) x (Emission Factor) x (Melt ton/hr) x (1-(Settling Factor)/100)
Maximum Annual Fugitive Emissions (ton/yr)= (Hourly fugitive emissions (lb/hr)) x (8760 hrs/yr) x (ton/2000 lbs)
Total Emission Rate (lb/hr) = (Maximum Stack Emission Rate lb/hr) + (Maximum Fugitive Emission Rate lb/hr)
Total Emission Rates Annual (TPY)= (annual stack emissions (ton/yr)) + (annual fugitive emissions (ton/yr))

Form AI-S003(5) Supplement
Potential to Emit
Emissions Calculations
East Jordan Foundry, LLC

Maximum Yearly Capacity
1,500 Tons/Year

Flow Diagram Designation
Shell Coremaking

Maximum Hourly Capacity
0.48 Tons/Hour

Process Description:
East Jordan Foundry, LLC
Shell Coremaking
Control Device: Baghouse L
SCC Code:
Control Device Outlet: gr/dscf
Airflow: acfm
Stack Gas Temperature: °F

Facility Process Name:		Criteria Pollutants								
Shell Coremaking										
Emission Factor Basis:		PM	PM10	PM2.5	SOx	NOx	VOC	CO	Lead	CO_2e
Emission Factors:	lb/ton	0.35	0.35	0.11			0.2%			
(source)		Note 1	Note 1	Note 2			Note 3			
	Capture Efficiency	99.00	99.00	99.00						
	Control Efficiency									
	Building Capt. Eff	70.00	70.00	70.00						
Maximum Stack Emission Rate:										
Hourly (lb/hr)		See Controlling BH(s) for Stk Emissions					0.001			
Annual (TPY)		See Controlling BH(s) for Stk Emissions					0.001			
Maximum Fugitive Emission Rate:										
Hourly (lb/hr)		0.001	0.001	0.000			1.824			
Annual (TPY)		0.001	0.001	0.000			2.850			
Total Emission Rate:										
Hourly (lb/hr)		0.001	0.001	0.000			1.825			
Annual (TPY)		0.001	0.001	0.000			2.851			

PROPOSED OPERATING SCHEDULE
24 HRS/DAY
6,000 HRS/YEAR

Note 1: Ohio RACM Guide, Page 2-219, Table 2.7-1, Emission Factor #15 gives uncontrolled emission factors of 0.3 lb/ton of sand mixed for mixing and 0.35 lb/ton of cores made from making the cores. No mixing will be conducted, the shell sand will be input directly into the machines. Therefore an emission factor of 0.35 lb/ton of cores made will be utilized.
Note 2: Emission factor based on USEPA PM Calculator (March 2012) PM to PM2.5 ratio and uncontrolled PM emission factor.
Note 3: %wt - Discussions w/Borden rep. Regarding Super F E19E19 MSDS

EXAMPLE CALCULATIONS:
Maximum Fugitive Emission Rate (lb/hr) = (Emission Factor) x (process weight rate (ton/hr)) x (1-(Settling Factor)/100)
Annual (TPY) Emission Rates = (lb/hr emission rate) x (1/ Maximum Hourly Process Rate (tons/hr)) x (Annual process weight rate (tons/yr))x (ton/2000)

East Jordan Foundry, LLC
HAP Emission Calculations
Shell Coremaking

HAPs	CAS #	Emission Factor %wt	Emissions lbs/hr	Emissions tons/yr	
Antimony (Sb)	7440-36-0				
Arsenic (As)	7440-38-2				
Beryllium (Be)	7440-41-7				
Cadmium (Cd)	7440-43-9				
Chromium (Cr)	7440-47-3				
Cobalt (Co)	7440-48-4				
Lead (Pb)	7439-92-1				
Manganese (Mn)	7439-96-5				
Mercury (Hg)	7439-97-6				
Nickel (Ni)	7440-02-0				
Selenium (Se)	7782-49-2				
Acetaldehyde	75-07-0				
Dimethylnaphthalenes	28804-88-8				
Cresol	1319-77-3				
Methylnaphthalenes	90-12-0				
Propionaldehyde	123-38-6				
Methylene diphenyl diisocyanate (MDI)	101-68-8				
4,4-methylenedianiline (MBA)	101-77-9				
Formaldehyde	50-00-0	0.02%	0.19	0.30	Note 3
Cumene	98-82-8				
Benzene	71-43-2				
O-Xylene	95-47-6				
M-Xylene	108-38-3				
Phenol	108-95-2	0.08%	0.77	1.20	Note 3
Naphthalene	91-20-3				
Ethyl Benzene	100-41-4				
Hydrogen Flouride	7664-39-3				
Toluene	108-88-3				
P-Xylene	106-42-3				
Hexane	110-54-3				
Xylenes	1330-20-7				
o-Cresol	95-48-7				
Styrene	100-42-5				
Acetophenone	98-86-2				
Dibenzofurans	132-64-9				
Nitrobenzene	98-95-3				
Total HAPs			9.60E-01	1.50E+00	

Form AI-S003(5) Supplement
Potential to Emit
Emissions Calculations
East Jordan Foundry, LLC

Flow Diagram Designation
Shell Core NG

Process Description:
Shell Core NG
Control Device: None

Natural Gas Combustion

Inputs

3	= Max. Hourly Heat Input Rate (MMBtu/hr) Note 1
1020	= MMBtu/MMscf
2941.2	= Max. Hourly Fuel Usage Rate (standard cubic feet hour)
6000	= Maximum Operation (hours/year)
17.64706	= Maximum Annual Fuel Usage (MMscf)

POLLUTANT	CAS #	Note 2 Emission Factor ($lb/10^6$ scf)	Maximum Emissions (lbs/hr)	(tpy)
PM/PM10/PM2.5	n/a	7.6	0.02	6.71E-02
NOx	n/a	100.0	0.29	8.82E-01
CO	n/a	84.0	0.25	7.41E-01
Lead	n/a	0.0005	1.47E-06	4.41E-06
SO2	n/a	0.6	0.002	5.29E-03
VOC	n/a	5.5	0.02	4.85E-02
CO_2e	n/a	120,000	352.94	1.06E+03
Arsenic (As)	7440-38-2	2.00E-04	5.88E-07	1.76E-06
Beryllium (Be)	7440-41-7	1.20E-05	3.53E-08	1.06E-07
Cadmium (Cd)	7440-43-9	1.10E-03	3.24E-06	9.71E-06
Chromium (Cr)	7440-47-3	1.40E-03	4.12E-06	1.24E-05
Cobalt (Co)	7440-48-4	8.40E-05	2.47E-07	7.41E-07
Manganese (Mn)	7439-96-5	3.80E-04	1.12E-06	3.35E-06
Mercury (Hg)	7439-97-6	2.60E-04	7.65E-07	2.29E-06
Nickel (Ni)	7440-02-0	2.10E-03	6.18E-06	1.85E-05
Selenium (Se)	7782-49-2	2.40E-05	7.06E-08	2.12E-07
POM/2-Methylnaphthalene	91-57-6	2.40E-05	7.06E-08	2.12E-07
POM/3-Methylchloranthrene	56-49-5	1.80E-06	5.29E-09	1.59E-08
POM/7,12-Dimethylbenz(a)anthracene	57-97-6	1.60E-05	4.71E-08	1.41E-07
POM/Acenaphthene	83-32-9	1.80E-06	5.29E-09	1.59E-08
POM/Acenaphthylene	203-96-8	1.80E-06	5.29E-09	1.59E-08
POM/Anthracene	120-12-7	2.40E-06	7.06E-09	2.12E-08
POM/Benz(a)anthracene	56-55-3	1.80E-06	5.29E-09	1.59E-08
Benzene	71-43-2	2.10E-03	6.18E-06	1.85E-05
POM/Benzo(a)pyrene	50-32-8	1.20E-06	3.53E-09	1.06E-08
POM/Benzo(b)fluoranthene	205-99-2	1.20E-06	3.53E-09	1.06E-08
POM/Benzo(g,h,i)perylene	191-24-2	1.20E-06	3.53E-09	1.06E-08
POM/Benzo(k)fluoranthene	205-82-3	1.80E-06	5.29E-09	1.59E-08
POM/Chrysene	218-01-9	1.80E-06	5.29E-09	1.59E-08
POM/Dibenzo(a,h)anthracene	53-70-3	1.20E-06	3.53E-09	1.06E-08
Dichlorobenzene	25321-22-6	1.20E-03	3.53E-06	1.06E-05
POM/Fluoranthene	206-44-0	3.00E-06	8.82E-09	2.65E-08
POM/Fluorene	86-73-7	2.80E-06	8.24E-09	2.47E-08
Formaldehyde	50-00-0	7.50E-02	2.21E-04	6.62E-04
Hexane	110-54-3	1.80E+00	5.29E-03	1.59E-02
POM/Indeno(1,2,3-cd)pyrene	193-39-5	1.80E-06	5.29E-09	1.59E-08
Naphthalene	91-20-3	6.10E-04	1.79E-06	5.38E-06
POM/Phenanathrene	85-01-8	1.70E-05	5.00E-08	1.50E-07
POM/Pyrene	129-00-0	5.00E-06	1.47E-08	4.41E-08
Toluene	108-88-3	3.40E-03	1.00E-05	3.00E-05
Total POM			2.58E-07	7.73E-07
Total HAPs			5.55E-03	1.67E-02

Note 1: Two (2) machines - 0.5 MMBTU/HR each
Note 2: FROM AP-42 Fifth Edition, Supplement D, TABLE 1.4-2&3&4, 7/98 External Combustion Sources 1.4-9. Many emission factors < than specific value. In this case, specific value used to error on conservative side

EXAMPLE CALCULATIONS:
Maximum Hourly Emission = Max.hourly Fuel Usage rate (standard cubic feet hour) x (Pollutant E.F.)
Maximum Yearly Emission = Max.Hourly Emission Rate (lb/hr) x (Maximum Hours of Operation)

Form AI-S003(5) Supplement
Potential to Emit
Emissions Calculations
East Jordan Foundry, LLC

Maximum Yearly Capacity
3,000 Tons/Year

Flow Diagram Designation
PUCB Coremaking

Maximum Hourly Capacity
12.77 Tons/Hour

Process Description:
East Jordan Foundry, LLC
PUCB Coremaking
Control Device: Baghouse L
SCC Code:
Control Device Outlet: gr/dscf
Airflow: acfm
Stack Gas Temperature: 100 °F

Facility Process Name:	Criteria Pollutants								
PUCB Coremaking									
Emission Factor Basis:	PM	PM10	PM2.5	SOx	NOx	VOC	CO	Lead	CO_2e
Emission Factors:	0.65	0.65	0.65						
(source)	Note 1	Note 1	Note 1						
Capture Efficiency	99.00	99.00	99.00						
Control Efficiency	98.00	98.00	98.00						
Building Capt. Eff	70.00	70.00	70.00						
Maximum Stack Emission Rate:									
Hourly (lb/hr)	See Controlling BH(s) for Stk Emissions								
Annual (TPY)	See Controlling BH(s) for Stk Emissions								
Maximum Fugitive Emission Rate:									
Hourly (lb/hr)	0.025	0.025	0.025						
Annual (TPY)	**0.003**	**0.003**	**0.003**						
Total Emission Rate:									
Hourly (lb/hr)	0.025	0.025	0.025						
Annual (TPY)	**0.003**	**0.003**	**0.003**						

PROPOSED OPERATING SCHEDULE
24 HRS/DAY
6,000 HRS/YEAR

Note 1: Ohio RACM Guide, Page 2-219, Table 2.7-1

EXAMPLE CALCULATIONS:
Maximum Fugitive Emission Rate (lb/hr) = (Emission Factor) x (process weight rate (ton/hr)) x (1-(Settling Factor)/100)
Annual (TPY) Emission Rates = (lb/hr emission rate) x (1/ Maximum Hourly Process Rate (tons/hr)) x (Annual process weight rate (tons/yr))x (ton/2000)

Form AI-S003(5) Supplement
Potential to Emit
Emissions Calculations
East Jordan Foundry, LLC

Maximum Yearly Capacity
3,000 Tons/Year

Maximum Hourly Capacity
12.77 Tons/Hour

Flow Diagram Designation
PUCB Coremaking
East Jordan Foundry, LLC
Air Toxic Emission Estimates from PUCB Core Making
Isocure I 316 T/Isocure II 616 T

1.0% % resin usage (of sand)
11% % catalyst usage (of resin)
45% % by weight Part 1
55% % by weight Part 2

	Air Toxics	CAS #	% by Weight*	Basis	Control Efficiency %	Emission Factor (E.F.) lb/ton Note 1	Emissions Factor Basis	Maximum Emissions lb/hr	Maximum Emissions tons/yr
	Total VOCs					1.13	Note 2	14.472	1.700
	Part 1 - Pep Set X 1024								
Note 3	Phenol	108-95-2	10.00%	SDS		-		0.000	0.000
	1,2,4-Trimethylbenzene	95-63-6	5.00%	SDS		0.015		0.187	0.022
	Cumene	98-82-8	0.50%	SDS		0.001		0.019	0.002
	Part 2 - Pep Set X II 2024								
	Catalyst								
	1,2,4-Trimethylbenzene	95-63-6	1.50%	SDS		0.004		0.056	0.007
	Naphthalene	91-20-3	10.00%	SDS		0.029		0.374	0.044
	Total HAPs							0.635	0.075

Note 1: Form R Reporting of Binder Chemicals Used in Foundries indicates that for PUCB binder systems, the following is emitted:
3.25% of all Napthalene and 1,2,4 Trimethylbenzene present and 2% of Formaldehyde is emitted from Part I.
0% of all Phenol present is emitted from Part I.
0% of all MDI (and monomer) and Polymeric Dipheylmethane Diisocyanate present is emitted from Part II.
It is assumed that what remains in the core will be released and counted in the Pouring & Cooling emissions.
Note 2: Email from ASK Chemicals' Jim Archibald on May 16, 2013.
Note 3: Hazardous Air Pollutant (HAP) as defined by Section 112(b) of the Clean Air Act
Note 4: Indicates compound is a Polycylic Organic Matter (POM)

Form AI-S003(5) Supplement
Potential to Emit
Emissions Calculations
East Jordan Foundry, LLC

Maximum Yearly Capacity
Tons/Year

Maximum Hourly Capacity
Tons/Hour

Flow Diagram Designation
Mold & Core Room Chemicals
East Jordan Foundry, LLC
VOC & HAP Emission Estimates from Mold & Core Room chemicals

	Material/TAC	CAS Number	Maximum Usage lbs/hr	Maximum Usage lbs/yr	VOC/TAC Content (% by wt)	VOC Control Efficiency (% Reduction)	Factor Basis	Emissions lb/hr	Emissions tons/yr
	Core Wash - Low VOC		5	25000	1%	0%	Material Balance	0.05	0.13
	VELVAPLASTTM TGW 053 COATING								
Note 1	Methanol	67-56-1			0.01%	0%	Material Balance	0.001	0.001
Note 1	Diethylene Glycol	111-46-6			0.01%	0%	Material Balance	0.001	0.001
Note 2	Hydrotreated light silicon	64742-47-8			1.00%	0%	Material Balance	0.05	0.13
	VELVALITE GA 2								
	No TACs emitted								
	Core Wash - Alcohol Based								
	VELVALITETM ZGA 065 Coating		5	20000	25%	70%	Material Balance	0.38	0.75
Note 2	Isopropyl Alcohol	67-63-0			25%	70%	Material Balance	0.38	0.75
	IPA Thinning Solvent		2.5	11000	100%	70%	Material Balance	0.75	1.65
Note 2	Isopropyl Alcohol	67-63-0			100%	70%	Material Balance	0.75	1.65
	Core Release - Shell Core								
	Nix Stix HCLVOC		0.1	150	50%	0%	Material Balance	0.05	0.04
Note 2	Acetaldehyde	75-07-0			0.1%	0%		0.0001	0.0001
	Core Release - No Bake								
	Zip Slip 125H		0.1	150	0.79%	0%	Material Balance	0.001	0.001
Note 2	High molecular wt. silicon	63148-62-9			100%	0%		0.10	0.08
							TOTAL	1.23	2.56

Note 1: Per ASK email, the maximum concentration of either TAC is less than 0.01%. Added 07/2019.
Note 2: Maximum SDS % by weight per SDS. Added 09/2019.

PROPOSED OPERATING SCHEDULE
24 HRS/DAY
6,000 HRS/YEAR

Form AI-S003(5) Supplement
Potential to Emit
Emissions Calculations
East Jordan Foundry, LLC

Maximum Yearly Capacity
64,620 Gal/Year Note 1

Flow Diagram Designation
Asphaltic Dip Coating

Maximum Hourly Capacity
17.23 Gal/Hour Note 1

Process Description:
East Jordan Foundry, LLC
Asphaltic Dip Coating
Control Device: None
SCC Code:
Control Device Outlet: gr/dscf
Airflow: acfm
Stack Gas Temperature: °F

Facility Process Name:	Criteria Pollutants								
Asphaltic Dip Coating									
Emission Factor Basis:	**PM**	**PM10**	**PM2.5**	**SOx**	**NOx**	**VOC**	**CO**	**Lead**	**CO_2e**
Emission Factors: lb/gal						0.47			
(source)						Note 2			
Capture Efficiency									
Control Efficiency									
Building Capt. Eff									
Maximum Stack Emission Rate:									
Hourly (lb/hr)									
Annual (TPY)									
Maximum Fugitive Emission Rate:									
Hourly (lb/hr)						8.099			
Annual (TPY)						**15.186**			
Total Emission Rate:									
Hourly (lb/hr)						8.099			
Annual (TPY)						**15.186**			

PROPOSED OPERATING SCHEDULE
22 HRS/DAY
6,000 HRS/YEAR

Note 1: Throughput rate based on 1.077 gal coating per ton melted at maximum melting rate and assuming coating is applied to 50% of total melted thoughput
Note 2: Vulcan MC4 VOC content from EPA Method 24 analysis, no HAPs exist in this substance

EXAMPLE CALCULATIONS:
Maximum Fugitive Emission Rate (lb/hr) = (Maximum Hourly Production gal/hr) x (VOC content lb/gal)
Maximum Annual Fugitive Emissions (ton/yr)= (Maximum Annual Production gal/yr) x (VOC content lb/gal) / (2000 lb/ton)

Form AI-S003(5) Supplement
Potential to Emit
Emissions Calculations
East Jordan Foundry, LLC

Flow Diagram Designation
Asphaltic Dip Tank Post Heater

Process Description:
Asphaltic Dip Tank Post Heater
Control Device: None

Natural Gas Combustion

Inputs	
3.64	= Max. Hourly Heat Input Rate (MMBtu/hr)
1020	= MMBtu/MMscf
3568.6	= Max. Hourly Fuel Usage Rate (standard cubic feet hour)
6000	= Maximum Operation (hours/year)
21.41176	= Maximum Annual Fuel Usage (MMscf)

POLLUTANT	CAS #	Note 1 Emission Factor (lb/10^6 scf)	Maximum Emissions (lbs/hr)	(tpy)
PM/PM10/PM2.5	n/a	7.6	0.03	8.14E-02
NOx	n/a	100.0	0.36	1.07E+00
CO	n/a	84.0	0.30	8.99E-01
Lead	n/a	0.0005	1.78E-06	5.35E-06
SO2	n/a	0.6	0.002	6.42E-03
VOC	n/a	5.5	0.02	5.89E-02
CO_2e	n/a	120,000	428.24	1.28E+03
Arsenic (As)	7440-38-2	2.00E-04	7.14E-07	2.14E-06
Beryllium (Be)	7440-41-7	1.20E-05	4.28E-08	1.28E-07
Cadmium (Cd)	7440-43-9	1.10E-03	3.93E-06	1.18E-05
Chromium (Cr)	7440-47-3	1.40E-03	5.00E-06	1.50E-05
Cobalt (Co)	7440-48-4	8.40E-05	3.00E-07	8.99E-07
Manganese (Mn)	7439-96-5	3.80E-04	1.36E-06	4.07E-06
Mercury (Hg)	7439-97-6	2.60E-04	9.28E-07	2.78E-06
Nickel (Ni)	7440-02-0	2.10E-03	7.49E-06	2.25E-05
Selenium (Se)	7782-49-2	2.40E-05	8.56E-08	2.57E-07
POM/2-Methylnaphthalene	91-57-6	2.40E-05	8.56E-08	2.57E-07
POM/3-Methylchloranthrene	56-49-5	1.80E-06	6.42E-09	1.93E-08
POM/7,12-Dimethylbenz(a)anthracene	57-97-6	1.60E-05	5.71E-08	1.71E-07
POM/Acenaphthene	83-32-9	1.80E-06	6.42E-09	1.93E-08
POM/Acenaphthylene	203-96-8	1.80E-06	6.42E-09	1.93E-08
POM/Anthracene	120-12-7	2.40E-06	8.56E-09	2.57E-08
POM/Benz(a)anthracene	56-55-3	1.80E-06	6.42E-09	1.93E-08
Benzene	71-43-2	2.10E-03	7.49E-06	2.25E-05
POM/Benzo(a)pyrene	50-32-8	1.20E-06	4.28E-09	1.28E-08
POM/Benzo(b)fluoranthene	205-99-2	1.20E-06	4.28E-09	1.28E-08
POM/Benzo(g,h,i)perylene	191-24-2	1.20E-06	4.28E-09	1.28E-08
POM/Benzo(k)fluoranthene	205-82-3	1.80E-06	6.42E-09	1.93E-08
POM/Chrysene	218-01-9	1.80E-06	6.42E-09	1.93E-08
POM/Dibenzo(a,h)anthracene	53-70-3	1.20E-06	4.28E-09	1.28E-08
Dichlorobenzene	25321-22-6	1.20E-03	4.28E-06	1.28E-05
POM/Fluoranthene	206-44-0	3.00E-06	1.07E-08	3.21E-08
POM/Fluorene	86-73-7	2.80E-06	9.99E-09	3.00E-08
Formaldehyde	50-00-0	7.50E-02	2.68E-04	8.03E-04
Hexane	110-54-3	1.80E+00	6.42E-03	1.93E-02
POM/Indeno(1,2,3-cd)pyrene	193-39-5	1.80E-06	6.42E-09	1.93E-08
Naphthalene	91-20-3	6.10E-04	2.18E-06	6.53E-06
POM/Phenanathrene	85-01-8	1.70E-05	6.07E-08	1.82E-07
POM/Pyrene	129-00-0	5.00E-06	1.78E-08	5.35E-08
Toluene	108-88-3	3.40E-03	1.21E-05	3.64E-05
Total POM			3.13E-07	9.38E-07
Total HAPs			6.74E-03	2.02E-02

Note 1: FROM AP-42 Fifth Edition, Supplement D, TABLE 1.4-2&3&4. 7/98 External Combustion Sources 1.4-9. Many emission factors < than specific value. In this case, specific value used to error on conservative side

EXAMPLE CALCULATIONS:
Maximum Hourly Emission = Max.hourly Fuel Usage rate (standard cubic feet hour) x (Pollutant E.F.)
Maximum Yearly Emission = Max.Hourly Emission Rate (lb/hr) x (Maximum Hours of Operation)

Form AI-S003(5) Supplement
Potential to Emit
Emissions Calculations
East Jordan Foundry, LLC

Flow Diagram Designation
MUA-1

Process Description:
MUA-1
Control Device: None

Natural Gas Combustion

Inputs

7.30296	= Max. Hourly Heat Input Rate (MMBtu/hr)
1020	= MMBtu/MMscf
7159.8	= Max. Hourly Fuel Usage Rate (standard cubic feet hour)
4000	= Maximum Operation (hours/year)
28.63906	= Maximum Annual Fuel Usage (MMscf)

POLLUTANT	CAS #	Note 1 Emission Factor (lb/10^6 scf)	Maximum Emissions (lbs/hr)	(tpy)
PM/PM10/PM2.5	n/a	7.6	0.05	1.09E-01
NOx	n/a	100.0	0.72	1.43E+00
CO	n/a	84.0	0.60	1.20E+00
Lead	n/a	0.0005	3.58E-06	7.16E-06
SO2	n/a	0.6	0.004	8.59E-03
VOC	n/a	5.5	0.04	7.88E-02
CO_2e	n/a	120,000	859.17	1.72E+03
Arsenic (As)	7440-38-2	2.00E-04	1.43E-06	2.86E-06
Beryllium (Be)	7440-41-7	1.20E-05	8.59E-08	1.72E-07
Cadmium (Cd)	7440-43-9	1.10E-03	7.88E-06	1.58E-05
Chromium (Cr)	7440-47-3	1.40E-03	1.00E-05	2.00E-05
Cobalt (Co)	7440-48-4	8.40E-05	6.01E-07	1.20E-06
Manganese (Mn)	7439-96-5	3.80E-04	2.72E-06	5.44E-06
Mercury (Hg)	7439-97-6	2.60E-04	1.86E-06	3.72E-06
Nickel (Ni)	7440-02-0	2.10E-03	1.50E-05	3.01E-05
Selenium (Se)	7782-49-2	2.40E-05	1.72E-07	3.44E-07
POM/2-Methylnaphthalene	91-57-6	2.40E-05	1.72E-07	3.44E-07
POM/3-Methylchloranthrene	56-49-5	1.80E-06	1.29E-08	2.58E-08
POM/7,12-Dimethylbenz(a)anthracene	57-97-6	1.60E-05	1.15E-07	2.29E-07
POM/Acenaphthene	83-32-9	1.80E-06	1.29E-08	2.58E-08
POM/Acenaphthylene	203-96-8	1.80E-06	1.29E-08	2.58E-08
POM/Anthracene	120-12-7	2.40E-06	1.72E-08	3.44E-08
POM/Benz(a)anthracene	56-55-3	1.80E-06	1.29E-08	2.58E-08
Benzene	71-43-2	2.10E-03	1.50E-05	3.01E-05
POM/Benzo(a)pyrene	50-32-8	1.20E-06	8.59E-09	1.72E-08
POM/Benzo(b)fluoranthene	205-99-2	1.20E-06	8.59E-09	1.72E-08
POM/Benzo(g,h,i)perylene	191-24-2	1.20E-06	8.59E-09	1.72E-08
POM/Benzo(k)fluoranthene	205-82-3	1.80E-06	1.29E-08	2.58E-08
POM/Chrysene	218-01-9	1.80E-06	1.29E-08	2.58E-08
POM/Dibenzo(a,h)anthracene	53-70-3	1.20E-06	8.59E-09	1.72E-08
Dichlorobenzene	25321-22-6	1.20E-03	8.59E-06	1.72E-05
POM/Fluoranthene	206-44-0	3.00E-06	2.15E-08	4.30E-08
POM/Fluorene	86-73-7	2.80E-06	2.00E-08	4.01E-08
Formaldehyde	50-00-0	7.50E-02	5.37E-04	1.07E-03
Hexane	110-54-3	1.80E+00	1.29E-02	2.58E-02
POM/Indeno(1,2,3-cd)pyrene	193-39-5	1.80E-06	1.29E-08	2.58E-08
Naphthalene	91-20-3	6.10E-04	4.37E-06	8.73E-06
POM/Phenanathrene	85-01-8	1.70E-05	1.22E-07	2.43E-07
POM/Pyrene	129-00-0	5.00E-06	3.58E-08	7.16E-08
Toluene	108-88-3	3.40E-03	2.43E-05	4.87E-05
Total POM			6.27E-07	1.25E-06
Total HAPs			1.35E-02	2.70E-02

Note 1: FROM AP-42 Fifth Edition, Supplement D, TABLE 1.4-2&3&4. 7/98 External Combustion Sources 1.4-9. Many emission factors < than specific value. In this case, specific value used to error on conservative side

EXAMPLE CALCULATIONS:
Maximum Hourly Emission = Max.hourly Fuel Usage rate (standard cubic feet hour) x (Pollutant E.F.)
Maximum Yearly Emission = Max.Hourly Emission Rate (lb/hr) x (Maximum Hours of Operation)

Form AI-S003(5) Supplement
Potential to Emit
Emissions Calculations
East Jordan Foundry, LLC

Flow Diagram Designation
MUA-2

Process Description:
MUA-2
Control Device: None

Natural Gas Combustion

Inputs

7.30296	= Max. Hourly Heat Input Rate (MMBtu/hr)
1020	= MMBtu/MMscf
7159.8	= Max. Hourly Fuel Usage Rate (standard cubic feet hour)
4000	= Maximum Operation (hours/year)
28.63906	= Maximum Annual Fuel Usage (MMscf)

POLLUTANT	CAS #	Note 1 Emission Factor ($lb/10^6$ scf)	Maximum Emissions (lbs/hr)	Maximum Emissions (tpy)
PM/PM10/PM2.5	n/a	7.6	0.05	1.09E-01
NOx	n/a	100.0	0.72	1.43E+00
CO	n/a	84.0	0.60	1.20E+00
Lead	n/a	0.0005	3.58E-06	7.16E-06
SO2	n/a	0.6	0.004	8.59E-03
VOC	n/a	5.5	0.04	7.88E-02
CO_2e	n/a	120,000	859.17	1.72E+03
Arsenic (As)	7440-38-2	2.00E-04	1.43E-06	2.86E-06
Beryllium (Be)	7440-41-7	1.20E-05	8.59E-08	1.72E-07
Cadmium (Cd)	7440-43-9	1.10E-03	7.88E-06	1.58E-05
Chromium (Cr)	7440-47-3	1.40E-03	1.00E-05	2.00E-05
Cobalt (Co)	7440-48-4	8.40E-05	6.01E-07	1.20E-06
Manganese (Mn)	7439-96-5	3.80E-04	2.72E-06	5.44E-06
Mercury (Hg)	7439-97-6	2.60E-04	1.86E-06	3.72E-06
Nickel (Ni)	7440-02-0	2.10E-03	1.50E-05	3.01E-05
Selenium (Se)	7782-49-2	2.40E-05	1.72E-07	3.44E-07
POM/2-Methylnaphthalene	91-57-6	2.40E-05	1.72E-07	3.44E-07
POM/3-Methylchloranthrene	56-49-5	1.80E-06	1.29E-08	2.58E-08
POM/7,12-Dimethylbenz(a)anthracene	57-97-6	1.60E-05	1.15E-07	2.29E-07
POM/Acenaphthene	83-32-9	1.80E-06	1.29E-08	2.58E-08
POM/Acenaphthylene	203-96-8	1.80E-06	1.29E-08	2.58E-08
POM/Anthracene	120-12-7	2.40E-06	1.72E-08	3.44E-08
POM/Benz(a)anthracene	56-55-3	1.80E-06	1.29E-08	2.58E-08
Benzene	71-43-2	2.10E-03	1.50E-05	3.01E-05
POM/Benzo(a)pyrene	50-32-8	1.20E-06	8.59E-09	1.72E-08
POM/Benzo(b)fluoranthene	205-99-2	1.20E-06	8.59E-09	1.72E-08
POM/Benzo(g,h,i)perylene	191-24-2	1.20E-06	8.59E-09	1.72E-08
POM/Benzo(k)fluoranthene	205-82-3	1.80E-06	1.29E-08	2.58E-08
POM/Chrysene	218-01-9	1.80E-06	1.29E-08	2.58E-08
POM/Dibenzo(a,h)anthracene	53-70-3	1.20E-06	8.59E-09	1.72E-08
Dichlorobenzene	25321-22-6	1.20E-03	8.59E-06	1.72E-05
POM/Fluoranthene	206-44-0	3.00E-06	2.15E-08	4.30E-08
POM/Fluorene	86-73-7	2.80E-06	2.00E-08	4.01E-08
Formaldehyde	50-00-0	7.50E-02	5.37E-04	1.07E-03
Hexane	110-54-3	1.80E+00	1.29E-02	2.58E-02
POM/Indeno(1,2,3-cd)pyrene	193-39-5	1.80E-06	1.29E-08	2.58E-08
Naphthalene	91-20-3	6.10E-04	4.37E-06	8.73E-06
POM/Phenanathrene	85-01-8	1.70E-05	1.22E-07	2.43E-07
POM/Pyrene	129-00-0	5.00E-06	3.58E-08	7.16E-08
Toluene	108-88-3	3.40E-03	2.43E-05	4.87E-05
Total POM			6.27E-07	1.25E-06
Total HAPs			1.35E-02	2.70E-02

Note 1: FROM AP-42 Fifth Edition, Supplement D, TABLE 1.4-2&3&4. 7/98 External Combustion Sources 1.4-9. Many emission factors < than specific value. In this case, specific value used to error on conservative side

EXAMPLE CALCULATIONS:
Maximum Hourly Emission = Max.hourly Fuel Usage rate (standard cubic feet hour) x (Pollutant E.F.)
Maximum Yearly Emission = Max.Hourly Emission Rate (lb/hr) x (Maximum Hours of Operation)

Form AI-S003(5) Supplement
Potential to Emit
Emissions Calculations
East Jordan Foundry, LLC

Flow Diagram Designation
MUA-3

Process Description:
MUA-3
Control Device: None

Natural Gas Combustion

Inputs

7.30296	= Max. Hourly Heat Input Rate (MMBtu/hr)
1020	= MMBtu/MMscf
7159.8	= Max. Hourly Fuel Usage Rate (standard cubic feet hour)
4000	= Maximum Operation (hours/year)
28.63906	= Maximum Annual Fuel Usage (MMscf)

POLLUTANT	CAS #	Note 1 Emission Factor ($lb/10^6$ scf)	Maximum Emissions (lbs/hr)	(tpy)
PM/PM10/PM2.5	n/a	7.6	0.05	1.09E-01
NOx	n/a	100.0	0.72	1.43E+00
CO	n/a	84.0	0.60	1.20E+00
Lead	n/a	0.0005	3.58E-06	7.16E-06
SO2	n/a	0.6	0.004	8.59E-03
VOC	n/a	5.5	0.04	7.88E-02
CO_2e	n/a	120,000	859.17	1.72E+03
Arsenic (As)	7440-38-2	2.00E-04	1.43E-06	2.86E-06
Beryllium (Be)	7440-41-7	1.20E-05	8.59E-08	1.72E-07
Cadmium (Cd)	7440-43-9	1.10E-03	7.88E-06	1.58E-05
Chromium (Cr)	7440-47-3	1.40E-03	1.00E-05	2.00E-05
Cobalt (Co)	7440-48-4	8.40E-05	6.01E-07	1.20E-06
Manganese (Mn)	7439-96-5	3.80E-04	2.72E-06	5.44E-06
Mercury (Hg)	7439-97-6	2.60E-04	1.86E-06	3.72E-06
Nickel (Ni)	7440-02-0	2.10E-03	1.50E-05	3.01E-05
Selenium (Se)	7782-49-2	2.40E-05	1.72E-07	3.44E-07
POM/2-Methylnaphthalene	91-57-6	2.40E-05	1.72E-07	3.44E-07
POM/3-Methylchloranthrene	56-49-5	1.80E-06	1.29E-08	2.58E-08
POM/7,12-Dimethylbenz(a)anthracene	57-97-6	1.60E-05	1.15E-07	2.29E-07
POM/Acenaphthene	83-32-9	1.80E-06	1.29E-08	2.58E-08
POM/Acenaphthylene	203-96-8	1.80E-06	1.29E-08	2.58E-08
POM/Anthracene	120-12-7	2.40E-06	1.72E-08	3.44E-08
POM/Benz(a)anthracene	56-55-3	1.80E-06	1.29E-08	2.58E-08
Benzene	71-43-2	2.10E-03	1.50E-05	3.01E-05
POM/Benzo(a)pyrene	50-32-8	1.20E-06	8.59E-09	1.72E-08
POM/Benzo(b)fluoranthene	205-99-2	1.20E-06	8.59E-09	1.72E-08
POM/Benzo(g,h,i)perylene	191-24-2	1.20E-06	8.59E-09	1.72E-08
POM/Benzo(k)fluoranthene	205-82-3	1.80E-06	1.29E-08	2.58E-08
POM/Chrysene	218-01-9	1.80E-06	1.29E-08	2.58E-08
POM/Dibenzo(a,h)anthracene	53-70-3	1.20E-06	8.59E-09	1.72E-08
Dichlorobenzene	25321-22-6	1.20E-03	8.59E-06	1.72E-05
POM/Fluoranthene	206-44-0	3.00E-06	2.15E-08	4.30E-08
POM/Fluorene	86-73-7	2.80E-06	2.00E-08	4.01E-08
Formaldehyde	50-00-0	7.50E-02	5.37E-04	1.07E-03
Hexane	110-54-3	1.80E+00	1.29E-02	2.58E-02
POM/Indeno(1,2,3-cd)pyrene	193-39-5	1.80E-06	1.29E-08	2.58E-08
Naphthalene	91-20-3	6.10E-04	4.37E-06	8.73E-06
POM/Phenanathrene	85-01-8	1.70E-05	1.22E-07	2.43E-07
POM/Pyrene	129-00-0	5.00E-06	3.58E-08	7.16E-08
Toluene	108-88-3	3.40E-03	2.43E-05	4.87E-05
Total POM			6.27E-07	1.25E-06
Total HAPs			1.35E-02	2.70E-02

Note 1: FROM AP-42 Fifth Edition, Supplement D, TABLE 1.4-2&3&4. 7/98 External Combustion Sources 1.4-9. Many emission factors < than specific value. In this case, specific value used to error on conservative side

EXAMPLE CALCULATIONS:
Maximum Hourly Emission = Max.hourly Fuel Usage rate (standard cubic feet hour) x (Pollutant E.F.)
Maximum Yearly Emission = Max.Hourly Emission Rate (lb/hr) x (Maximum Hours of Operation)

Form AI-S003(5) Supplement
Potential to Emit
Emissions Calculations
East Jordan Foundry, LLC

Flow Diagram Designation
MUA-4

Process Description:
MUA-4
Control Device: None

Natural Gas Combustion

Inputs

7.30296	= Max. Hourly Heat Input Rate (MMBtu/hr)
1020	= MMBtu/MMscf
7159.8	= Max. Hourly Fuel Usage Rate (standard cubic feet hour)
4000	= Maximum Operation (hours/year)
28.63906	= Maximum Annual Fuel Usage (MMscf)

POLLUTANT	CAS #	Note 1 Emission Factor ($lb/10^6$ scf)	Maximum Emissions (lbs/hr)	(tpy)
PM/PM10/PM2.5	n/a	7.6	0.05	1.09E-01
NOx	n/a	100.0	0.72	1.43E+00
CO	n/a	84.0	0.60	1.20E+00
Lead	n/a	0.0005	3.58E-06	7.16E-06
SO2	n/a	0.6	0.004	8.59E-03
VOC	n/a	5.5	0.04	7.88E-02
CO_2e	n/a	120,000	859.17	1.72E+03
Arsenic (As)	7440-38-2	2.00E-04	1.43E-06	2.86E-06
Beryllium (Be)	7440-41-7	1.20E-05	8.59E-08	1.72E-07
Cadmium (Cd)	7440-43-9	1.10E-03	7.88E-06	1.58E-05
Chromium (Cr)	7440-47-3	1.40E-03	1.00E-05	2.00E-05
Cobalt (Co)	7440-48-4	8.40E-05	6.01E-07	1.20E-06
Manganese (Mn)	7439-96-5	3.80E-04	2.72E-06	5.44E-06
Mercury (Hg)	7439-97-6	2.60E-04	1.86E-06	3.72E-06
Nickel (Ni)	7440-02-0	2.10E-03	1.50E-05	3.01E-05
Selenium (Se)	7782-49-2	2.40E-05	1.72E-07	3.44E-07
POM/2-Methylnaphthalene	91-57-6	2.40E-05	1.72E-07	3.44E-07
POM/3-Methylchloranthrene	56-49-5	1.80E-06	1.29E-08	2.58E-08
POM/7,12-Dimethylbenz(a)anthracene	57-97-6	1.60E-05	1.15E-07	2.29E-07
POM/Acenaphthene	83-32-9	1.80E-06	1.29E-08	2.58E-08
POM/Acenaphthylene	203-96-8	1.80E-06	1.29E-08	2.58E-08
POM/Anthracene	120-12-7	2.40E-06	1.72E-08	3.44E-08
POM/Benz(a)anthracene	56-55-3	1.80E-06	1.29E-08	2.58E-08
Benzene	71-43-2	2.10E-03	1.50E-05	3.01E-05
POM/Benzo(a)pyrene	50-32-8	1.20E-06	8.59E-09	1.72E-08
POM/Benzo(b)fluoranthene	205-99-2	1.20E-06	8.59E-09	1.72E-08
POM/Benzo(g,h,i)perylene	191-24-2	1.20E-06	8.59E-09	1.72E-08
POM/Benzo(k)fluoranthene	205-82-3	1.80E-06	1.29E-08	2.58E-08
POM/Chrysene	218-01-9	1.80E-06	1.29E-08	2.58E-08
POM/Dibenzo(a,h)anthracene	53-70-3	1.20E-06	8.59E-09	1.72E-08
Dichlorobenzene	25321-22-6	1.20E-03	8.59E-06	1.72E-05
POM/Fluoranthene	206-44-0	3.00E-06	2.15E-08	4.30E-08
POM/Fluorene	86-73-7	2.80E-06	2.00E-08	4.01E-08
Formaldehyde	50-00-0	7.50E-02	5.37E-04	1.07E-03
Hexane	110-54-3	1.80E+00	1.29E-02	2.58E-02
POM/Indeno(1,2,3-cd)pyrene	193-39-5	1.80E-06	1.29E-08	2.58E-08
Naphthalene	91-20-3	6.10E-04	4.37E-06	8.73E-06
POM/Phenanathrene	85-01-8	1.70E-05	1.22E-07	2.43E-07
POM/Pyrene	129-00-0	5.00E-06	3.58E-08	7.16E-08
Toluene	108-88-3	3.40E-03	2.43E-05	4.87E-05
Total POM			6.27E-07	1.25E-06
Total HAPs			1.35E-02	2.70E-02

Note 1: FROM AP-42 Fifth Edition, Supplement D, TABLE 1.4-2&3&4. 7/98 External Combustion Sources 1.4-9. Many emission factors < than specific value. In this case, specific value used to error on conservative side

EXAMPLE CALCULATIONS:
Maximum Hourly Emission = Max.hourly Fuel Usage rate (standard cubic feet hour) x (Pollutant E.F.)
Maximum Yearly Emission = Max.Hourly Emission Rate (lb/hr) x (Maximum Hours of Operation)

Form AI-S003(5) Supplement
Potential to Emit
Emissions Calculations
East Jordan Foundry, LLC

Flow Diagram Designation
MUA-5

Process Description:
MUA-5
Control Device: None

Natural Gas Combustion

Inputs

7.30296	= Max. Hourly Heat Input Rate (MMBtu/hr)
1020	= MMBtu/MMscf
7159.8	= Max. Hourly Fuel Usage Rate (standard cubic feet hour)
4000	= Maximum Operation (hours/year)
28.63906	= Maximum Annual Fuel Usage (MMscf)

POLLUTANT	CAS #	Note 1 Emission Factor (lb/10^6 scf)	Maximum Emissions (lbs/hr)	Maximum Emissions (tpy)
PM/PM10/PM2.5	n/a	7.6	0.05	1.09E-01
NOx	n/a	100.0	0.72	1.43E+00
CO	n/a	84.0	0.60	1.20E+00
Lead	n/a	0.0005	3.58E-06	7.16E-06
SO2	n/a	0.6	0.004	8.59E-03
VOC	n/a	5.5	0.04	7.88E-02
CO_2e	n/a	120,000	859.17	1.72E+03
Arsenic (As)	7440-38-2	2.00E-04	1.43E-06	2.86E-06
Beryllium (Be)	7440-41-7	1.20E-05	8.59E-08	1.72E-07
Cadmium (Cd)	7440-43-9	1.10E-03	7.88E-06	1.58E-05
Chromium (Cr)	7440-47-3	1.40E-03	1.00E-05	2.00E-05
Cobalt (Co)	7440-48-4	8.40E-05	6.01E-07	1.20E-06
Manganese (Mn)	7439-96-5	3.80E-04	2.72E-06	5.44E-06
Mercury (Hg)	7439-97-6	2.60E-04	1.86E-06	3.72E-06
Nickel (Ni)	7440-02-0	2.10E-03	1.50E-05	3.01E-05
Selenium (Se)	7782-49-2	2.40E-05	1.72E-07	3.44E-07
POM/2-Methylnaphthalene	91-57-6	2.40E-05	1.72E-07	3.44E-07
POM/3-Methylchloranthrene	56-49-5	1.80E-06	1.29E-08	2.58E-08
POM/7,12-Dimethylbenz(a)anthracene	57-97-6	1.60E-05	1.15E-07	2.29E-07
POM/Acenaphthene	83-32-9	1.80E-06	1.29E-08	2.58E-08
POM/Acenaphthylene	203-96-8	1.80E-06	1.29E-08	2.58E-08
POM/Anthracene	120-12-7	2.40E-06	1.72E-08	3.44E-08
POM/Benz(a)anthracene	56-55-3	1.80E-06	1.29E-08	2.58E-08
Benzene	71-43-2	2.10E-03	1.50E-05	3.01E-05
POM/Benzo(a)pyrene	50-32-8	1.20E-06	8.59E-09	1.72E-08
POM/Benzo(b)fluoranthene	205-99-2	1.20E-06	8.59E-09	1.72E-08
POM/Benzo(g,h,i)perylene	191-24-2	1.20E-06	8.59E-09	1.72E-08
POM/Benzo(k)fluoranthene	205-82-3	1.80E-06	1.29E-08	2.58E-08
POM/Chrysene	218-01-9	1.80E-06	1.29E-08	2.58E-08
POM/Dibenzo(a,h)anthracene	53-70-3	1.20E-06	8.59E-09	1.72E-08
Dichlorobenzene	25321-22-6	1.20E-03	8.59E-06	1.72E-05
POM/Fluoranthene	206-44-0	3.00E-06	2.15E-08	4.30E-08
POM/Fluorene	86-73-7	2.80E-06	2.00E-08	4.01E-08
Formaldehyde	50-00-0	7.50E-02	5.37E-04	1.07E-03
Hexane	110-54-3	1.80E+00	1.29E-02	2.58E-02
POM/Indeno(1,2,3-cd)pyrene	193-39-5	1.80E-06	1.29E-08	2.58E-08
Naphthalene	91-20-3	6.10E-04	4.37E-06	8.73E-06
POM/Phenanathrene	85-01-8	1.70E-05	1.22E-07	2.43E-07
POM/Pyrene	129-00-0	5.00E-06	3.58E-08	7.16E-08
Toluene	108-88-3	3.40E-03	2.43E-05	4.87E-05
Total POM			6.27E-07	1.25E-06
Total HAPs			1.35E-02	2.70E-02

Note 1: FROM AP-42 Fifth Edition, Supplement D, TABLE 1.4-2&3&4. 7/98 External Combustion Sources 1.4-9. Many emission factors < than specific value. In this case, specific value used to error on conservative side

EXAMPLE CALCULATIONS:
Maximum Hourly Emission = Max.hourly Fuel Usage rate (standard cubic feet hour) x (Pollutant E.F.)
Maximum Yearly Emission = Max.Hourly Emission Rate (lb/hr) x (Maximum Hours of Operation)

Form AI-S003(5) Supplement
Potential to Emit
Emissions Calculations
East Jordan Foundry, LLC

Flow Diagram Designation
MUA-6

Process Description:
MUA-6
Control Device: None

Natural Gas Combustion

Inputs	
7.30296	= Max. Hourly Heat Input Rate (MMBtu/hr)
1020	= MMBtu/MMscf
7159.8	= Max. Hourly Fuel Usage Rate (standard cubic feet hour)
4000	= Maximum Operation (hours/year)
28.63906	= Maximum Annual Fuel Usage (MMscf)

POLLUTANT	CAS #	Note 1 Emission Factor (lb/10^6 scf)	Maximum Emissions (lbs/hr)	(tpy)
PM/PM10/PM2.5	n/a	7.6	0.05	1.09E-01
NOx	n/a	100.0	0.72	1.43E+00
CO	n/a	84.0	0.60	1.20E+00
Lead	n/a	0.0005	3.58E-06	7.16E-06
SO2	n/a	0.6	0.004	8.59E-03
VOC	n/a	5.5	0.04	7.88E-02
CO_2e	n/a	120,000	859.17	1.72E+03
Arsenic (As)	7440-38-2	2.00E-04	1.43E-06	2.86E-06
Beryllium (Be)	7440-41-7	1.20E-05	8.59E-08	1.72E-07
Cadmium (Cd)	7440-43-9	1.10E-03	7.88E-06	1.58E-05
Chromium (Cr)	7440-47-3	1.40E-03	1.00E-05	2.00E-05
Cobalt (Co)	7440-48-4	8.40E-05	6.01E-07	1.20E-06
Manganese (Mn)	7439-96-5	3.80E-04	2.72E-06	5.44E-06
Mercury (Hg)	7439-97-6	2.60E-04	1.86E-06	3.72E-06
Nickel (Ni)	7440-02-0	2.10E-03	1.50E-05	3.01E-05
Selenium (Se)	7782-49-2	2.40E-05	1.72E-07	3.44E-07
POM/2-Methylnaphthalene	91-57-6	2.40E-05	1.72E-07	3.44E-07
POM/3-Methylchloranthrene	56-49-5	1.80E-06	1.29E-08	2.58E-08
POM/7,12-Dimethylbenz(a)anthracene	57-97-6	1.60E-05	1.15E-07	2.29E-07
POM/Acenaphthene	83-32-9	1.80E-06	1.29E-08	2.58E-08
POM/Acenaphthylene	203-96-8	1.80E-06	1.29E-08	2.58E-08
POM/Anthracene	120-12-7	2.40E-06	1.72E-08	3.44E-08
POM/Benz(a)anthracene	56-55-3	1.80E-06	1.29E-08	2.58E-08
Benzene	71-43-2	2.10E-03	1.50E-05	3.01E-05
POM/Benzo(a)pyrene	50-32-8	1.20E-06	8.59E-09	1.72E-08
POM/Benzo(b)fluoranthene	205-99-2	1.20E-06	8.59E-09	1.72E-08
POM/Benzo(g,h,i)perylene	191-24-2	1.20E-06	8.59E-09	1.72E-08
POM/Benzo(k)fluoranthene	205-82-3	1.80E-06	1.29E-08	2.58E-08
POM/Chrysene	218-01-9	1.80E-06	1.29E-08	2.58E-08
POM/Dibenzo(a,h)anthracene	53-70-3	1.20E-06	8.59E-09	1.72E-08
Dichlorobenzene	25321-22-6	1.20E-03	8.59E-06	1.72E-05
POM/Fluoranthene	206-44-0	3.00E-06	2.15E-08	4.30E-08
POM/Fluorene	86-73-7	2.80E-06	2.00E-08	4.01E-08
Formaldehyde	50-00-0	7.50E-02	5.37E-04	1.07E-03
Hexane	110-54-3	1.80E+00	1.29E-02	2.58E-02
POM/Indeno(1,2,3-cd)pyrene	193-39-5	1.80E-06	1.29E-08	2.58E-08
Naphthalene	91-20-3	6.10E-04	4.37E-06	8.73E-06
POM/Phenanathrene	85-01-8	1.70E-05	1.22E-07	2.43E-07
POM/Pyrene	129-00-0	5.00E-06	3.58E-08	7.16E-08
Toluene	108-88-3	3.40E-03	2.43E-05	4.87E-05
Total POM			6.27E-07	1.25E-06
Total HAPs			1.35E-02	2.70E-02

Note 1: FROM AP-42 Fifth Edition, Supplement D, TABLE 1.4-2&3&4. 7/98 External Combustion Sources 1.4-9. Many emission factors < than specific value. In this case, specific value used to error on conservative side

EXAMPLE CALCULATIONS:
Maximum Hourly Emission = Max.hourly Fuel Usage rate (standard cubic feet hour) x (Pollutant E.F.)
Maximum Yearly Emission = Max.Hourly Emission Rate (lb/hr) x (Maximum Hours of Operation)

Form AI-S003(5) Supplement
Potential to Emit
Emissions Calculations
East Jordan Foundry, LLC

Flow Diagram Designation
MUA-7

Process Description:
MUA-7
Control Device: None

Natural Gas Combustion

Inputs

7.30296	= Max. Hourly Heat Input Rate (MMBtu/hr)
1020	= MMBtu/MMscf
7159.8	= Max. Hourly Fuel Usage Rate (standard cubic feet hour)
4000	= Maximum Operation (hours/year)
28.63906	= Maximum Annual Fuel Usage (MMscf)

POLLUTANT	CAS #	Note 1 Emission Factor (lb/10^6 scf)	Maximum Emissions (lbs/hr)	(tpy)
PM/PM10/PM2.5	n/a	7.6	0.05	1.09E-01
NOx	n/a	100.0	0.72	1.43E+00
CO	n/a	84.0	0.60	1.20E+00
Lead	n/a	0.0005	3.58E-06	7.16E-06
SO2	n/a	0.6	0.004	8.59E-03
VOC	n/a	5.5	0.04	7.88E-02
CO_2e	n/a	120,000	859.17	1.72E+03
Arsenic (As)	7440-38-2	2.00E-04	1.43E-06	2.86E-06
Beryllium (Be)	7440-41-7	1.20E-05	8.59E-08	1.72E-07
Cadmium (Cd)	7440-43-9	1.10E-03	7.88E-06	1.58E-05
Chromium (Cr)	7440-47-3	1.40E-03	1.00E-05	2.00E-05
Cobalt (Co)	7440-48-4	8.40E-05	6.01E-07	1.20E-06
Manganese (Mn)	7439-96-5	3.80E-04	2.72E-06	5.44E-06
Mercury (Hg)	7439-97-6	2.60E-04	1.86E-06	3.72E-06
Nickel (Ni)	7440-02-0	2.10E-03	1.50E-05	3.01E-05
Selenium (Se)	7782-49-2	2.40E-05	1.72E-07	3.44E-07
POM/2-Methylnaphthalene	91-57-6	2.40E-05	1.72E-07	3.44E-07
POM/3-Methylchloranthrene	56-49-5	1.80E-06	1.29E-08	2.58E-08
POM/7,12-Dimethylbenz(a)anthracene	57-97-6	1.60E-05	1.15E-07	2.29E-07
POM/Acenaphthene	83-32-9	1.80E-06	1.29E-08	2.58E-08
POM/Acenaphthylene	203-96-8	1.80E-06	1.29E-08	2.58E-08
POM/Anthracene	120-12-7	2.40E-06	1.72E-08	3.44E-08
POM/Benz(a)anthracene	56-55-3	1.80E-06	1.29E-08	2.58E-08
Benzene	71-43-2	2.10E-03	1.50E-05	3.01E-05
POM/Benzo(a)pyrene	50-32-8	1.20E-06	8.59E-09	1.72E-08
POM/Benzo(b)fluoranthene	205-99-2	1.20E-06	8.59E-09	1.72E-08
POM/Benzo(g,h,i)perylene	191-24-2	1.20E-06	8.59E-09	1.72E-08
POM/Benzo(k)fluoranthene	205-82-3	1.80E-06	1.29E-08	2.58E-08
POM/Chrysene	218-01-9	1.80E-06	1.29E-08	2.58E-08
POM/Dibenzo(a,h)anthracene	53-70-3	1.20E-06	8.59E-09	1.72E-08
Dichlorobenzene	25321-22-6	1.20E-03	8.59E-06	1.72E-05
POM/Fluoranthene	206-44-0	3.00E-06	2.15E-08	4.30E-08
POM/Fluorene	86-73-7	2.80E-06	2.00E-08	4.01E-08
Formaldehyde	50-00-0	7.50E-02	5.37E-04	1.07E-03
Hexane	110-54-3	1.80E+00	1.29E-02	2.58E-02
POM/Indeno(1,2,3-cd)pyrene	193-39-5	1.80E-06	1.29E-08	2.58E-08
Naphthalene	91-20-3	6.10E-04	4.37E-06	8.73E-06
POM/Phenanathrene	85-01-8	1.70E-05	1.22E-07	2.43E-07
POM/Pyrene	129-00-0	5.00E-06	3.58E-08	7.16E-08
Toluene	108-88-3	3.40E-03	2.43E-05	4.87E-05
Total POM			6.27E-07	1.25E-06
Total HAPs			1.35E-02	2.70E-02

Note 1: FROM AP-42 Fifth Edition, Supplement D, TABLE 1.4-2&3&4. 7/98 External Combustion Sources 1.4-9. Many emission factors < than specific value. In this case, specific value used to error on conservative side

EXAMPLE CALCULATIONS:
Maximum Hourly Emission = Max.hourly Fuel Usage rate (standard cubic feet hour) x (Pollutant E.F.)
Maximum Yearly Emission = Max.Hourly Emission Rate (lb/hr) x (Maximum Hours of Operation)

Form AI-S003(5) Supplement
Potential to Emit
Emissions Calculations
East Jordan Foundry, LLC

Flow Diagram Designation
MUA-8

Process Description:
MUA-8
Control Device: None

Natural Gas Combustion

Inputs

7.30296	= Max. Hourly Heat Input Rate (MMBtu/hr)
1020	= MMBtu/MMscf
7159.8	= Max. Hourly Fuel Usage Rate (standard cubic feet hour)
4000	= Maximum Operation (hours/year)
28.63906	= Maximum Annual Fuel Usage (MMscf)

POLLUTANT	CAS #	Note 1 Emission Factor ($lb/10^6$ scf)	Maximum Emissions (lbs/hr)	Maximum Emissions (tpy)
PM/PM10/PM2.5	n/a	7.6	0.05	1.09E-01
NOx	n/a	100.0	0.72	1.43E+00
CO	n/a	84.0	0.60	1.20E+00
Lead	n/a	0.0005	3.58E-06	7.16E-06
SO2	n/a	0.6	0.004	8.59E-03
VOC	n/a	5.5	0.04	7.88E-02
CO_2e	n/a	120,000	859.17	1.72E+03
Arsenic (As)	7440-38-2	2.00E-04	1.43E-06	2.86E-06
Beryllium (Be)	7440-41-7	1.20E-05	8.59E-08	1.72E-07
Cadmium (Cd)	7440-43-9	1.10E-03	7.88E-06	1.58E-05
Chromium (Cr)	7440-47-3	1.40E-03	1.00E-05	2.00E-05
Cobalt (Co)	7440-48-4	8.40E-05	6.01E-07	1.20E-06
Manganese (Mn)	7439-96-5	3.80E-04	2.72E-06	5.44E-06
Mercury (Hg)	7439-97-6	2.60E-04	1.86E-06	3.72E-06
Nickel (Ni)	7440-02-0	2.10E-03	1.50E-05	3.01E-05
Selenium (Se)	7782-49-2	2.40E-05	1.72E-07	3.44E-07
POM/2-Methylnaphthalene	91-57-6	2.40E-05	1.72E-07	3.44E-07
POM/3-Methylchloranthrene	56-49-5	1.80E-06	1.29E-08	2.58E-08
POM/7,12-Dimethylbenz(a)anthracene	57-97-6	1.60E-05	1.15E-07	2.29E-07
POM/Acenaphthene	83-32-9	1.80E-06	1.29E-08	2.58E-08
POM/Acenaphthylene	203-96-8	1.80E-06	1.29E-08	2.58E-08
POM/Anthracene	120-12-7	2.40E-06	1.72E-08	3.44E-08
POM/Benz(a)anthracene	56-55-3	1.80E-06	1.29E-08	2.58E-08
Benzene	71-43-2	2.10E-03	1.50E-05	3.01E-05
POM/Benzo(a)pyrene	50-32-8	1.20E-06	8.59E-09	1.72E-08
POM/Benzo(b)fluoranthene	205-99-2	1.20E-06	8.59E-09	1.72E-08
POM/Benzo(g,h,i)perylene	191-24-2	1.20E-06	8.59E-09	1.72E-08
POM/Benzo(k)fluoranthene	205-82-3	1.80E-06	1.29E-08	2.58E-08
POM/Chrysene	218-01-9	1.80E-06	1.29E-08	2.58E-08
POM/Dibenzo(a,h)anthracene	53-70-3	1.20E-06	8.59E-09	1.72E-08
Dichlorobenzene	25321-22-6	1.20E-03	8.59E-06	1.72E-05
POM/Fluoranthene	206-44-0	3.00E-06	2.15E-08	4.30E-08
POM/Fluorene	86-73-7	2.80E-06	2.00E-08	4.01E-08
Formaldehyde	50-00-0	7.50E-02	5.37E-04	1.07E-03
Hexane	110-54-3	1.80E+00	1.29E-02	2.58E-02
POM/Indeno(1,2,3-cd)pyrene	193-39-5	1.80E-06	1.29E-08	2.58E-08
Naphthalene	91-20-3	6.10E-04	4.37E-06	8.73E-06
POM/Phenanathrene	85-01-8	1.70E-05	1.22E-07	2.43E-07
POM/Pyrene	129-00-0	5.00E-06	3.58E-08	7.16E-08
Toluene	108-88-3	3.40E-03	2.43E-05	4.87E-05
Total POM			6.27E-07	1.25E-06
Total HAPs			1.35E-02	2.70E-02

Note 1: FROM AP-42 Fifth Edition, Supplement D, TABLE 1.4-2&3&4. 7/98 External Combustion Sources 1.4-9. Many emission factors < than specific value. In this case, specific value used to error on conservative side

EXAMPLE CALCULATIONS:
Maximum Hourly Emission = Max.hourly Fuel Usage rate (standard cubic feet hour) x (Pollutant E.F.)
Maximum Yearly Emission = Max.Hourly Emission Rate (lb/hr) x (Maximum Hours of Operation)

Form AI-S003(5) Supplement
Potential to Emit
Emissions Calculations
East Jordan Foundry, LLC

Flow Diagram Designation
MUA-9

Process Description:
MUA-9
Control Device: None

Natural Gas Combustion

Inputs	
7.30296	= Max. Hourly Heat Input Rate (MMBtu/hr)
1020	= MMBtu/MMscf
7159.8	= Max. Hourly Fuel Usage Rate (standard cubic feet hour)
4000	= Maximum Operation (hours/year)
28.63906	= Maximum Annual Fuel Usage (MMscf)

POLLUTANT	CAS #	Note 1 Emission Factor ($lb/10^6$ scf)	Maximum Emissions (lbs/hr)	(tpy)
PM/PM10/PM2.5	n/a	7.6	0.05	1.09E-01
NOx	n/a	100.0	0.72	1.43E+00
CO	n/a	84.0	0.60	1.20E+00
Lead	n/a	0.0005	3.58E-06	7.16E-06
SO2	n/a	0.6	0.004	8.59E-03
VOC	n/a	5.5	0.04	7.88E-02
CO_2e	n/a	120,000	859.17	1.72E+03
Arsenic (As)	7440-38-2	2.00E-04	1.43E-06	2.86E-06
Beryllium (Be)	7440-41-7	1.20E-05	8.59E-08	1.72E-07
Cadmium (Cd)	7440-43-9	1.10E-03	7.88E-06	1.58E-05
Chromium (Cr)	7440-47-3	1.40E-03	1.00E-05	2.00E-05
Cobalt (Co)	7440-48-4	8.40E-05	6.01E-07	1.20E-06
Manganese (Mn)	7439-96-5	3.80E-04	2.72E-06	5.44E-06
Mercury (Hg)	7439-97-6	2.60E-04	1.86E-06	3.72E-06
Nickel (Ni)	7440-02-0	2.10E-03	1.50E-05	3.01E-05
Selenium (Se)	7782-49-2	2.40E-05	1.72E-07	3.44E-07
POM/2-Methylnaphthalene	91-57-6	2.40E-05	1.72E-07	3.44E-07
POM/3-Methylchloranthrene	56-49-5	1.80E-06	1.29E-08	2.58E-08
POM/7,12-Dimethylbenz(a)anthracene	57-97-6	1.60E-05	1.15E-07	2.29E-07
POM/Acenaphthene	83-32-9	1.80E-06	1.29E-08	2.58E-08
POM/Acenaphthylene	203-96-8	1.80E-06	1.29E-08	2.58E-08
POM/Anthracene	120-12-7	2.40E-06	1.72E-08	3.44E-08
POM/Benz(a)anthracene	56-55-3	1.80E-06	1.29E-08	2.58E-08
Benzene	71-43-2	2.10E-03	1.50E-05	3.01E-05
POM/Benzo(a)pyrene	50-32-8	1.20E-06	8.59E-09	1.72E-08
POM/Benzo(b)fluoranthene	205-99-2	1.20E-06	8.59E-09	1.72E-08
POM/Benzo(g,h,i)perylene	191-24-2	1.20E-06	8.59E-09	1.72E-08
POM/Benzo(k)fluoranthene	205-82-3	1.80E-06	1.29E-08	2.58E-08
POM/Chrysene	218-01-9	1.80E-06	1.29E-08	2.58E-08
POM/Dibenzo(a,h)anthracene	53-70-3	1.20E-06	8.59E-09	1.72E-08
Dichlorobenzene	25321-22-6	1.20E-03	8.59E-06	1.72E-05
POM/Fluoranthene	206-44-0	3.00E-06	2.15E-08	4.30E-08
POM/Fluorene	86-73-7	2.80E-06	2.00E-08	4.01E-08
Formaldehyde	50-00-0	7.50E-02	5.37E-04	1.07E-03
Hexane	110-54-3	1.80E+00	1.29E-02	2.58E-02
POM/Indeno(1,2,3-cd)pyrene	193-39-5	1.80E-06	1.29E-08	2.58E-08
Naphthalene	91-20-3	6.10E-04	4.37E-06	8.73E-06
POM/Phenanathrene	85-01-8	1.70E-05	1.22E-07	2.43E-07
POM/Pyrene	129-00-0	5.00E-06	3.58E-08	7.16E-08
Toluene	108-88-3	3.40E-03	2.43E-05	4.87E-05
Total POM			6.27E-07	1.25E-06
Total HAPs			1.35E-02	2.70E-02

Note 1: FROM AP-42 Fifth Edition, Supplement D, TABLE 1.4-2&3&4. 7/98 External Combustion Sources 1.4-9. Many emission factors < than specific value. In this case, specific value used to error on conservative side

EXAMPLE CALCULATIONS:
Maximum Hourly Emission = Max.hourly Fuel Usage rate (standard cubic feet hour) x (Pollutant E.F.)
Maximum Yearly Emission = Max.Hourly Emission Rate (lb/hr) x (Maximum Hours of Operation)

Form AI-S003(5) Supplement
Potential to Emit
Emissions Calculations
East Jordan Foundry, LLC

Flow Diagram Designation
MUA-10

Process Description:
MUA-10
Control Device: None

Natural Gas Combustion

Inputs

5.47722	= Max. Hourly Heat Input Rate (MMBtu/hr)
1020	= MMBtu/MMscf
5369.8	= Max. Hourly Fuel Usage Rate (standard cubic feet hour)
4000	= Maximum Operation (hours/year)
21.47929	= Maximum Annual Fuel Usage (MMscf)

POLLUTANT	CAS #	Note 1 Emission Factor (lb/10^6 scf)	Maximum Emissions (lbs/hr)	Maximum Emissions (tpy)
PM/PM10/PM2.5	n/a	7.6	0.04	8.16E-02
NOx	n/a	100.0	0.54	1.07E+00
CO	n/a	84.0	0.45	9.02E-01
Lead	n/a	0.0005	2.68E-06	5.37E-06
SO2	n/a	0.6	0.003	6.44E-03
VOC	n/a	5.5	0.03	5.91E-02
CO_2e	n/a	120,000	644.38	1.29E+03
Arsenic (As)	7440-38-2	2.00E-04	1.07E-06	2.15E-06
Beryllium (Be)	7440-41-7	1.20E-05	6.44E-08	1.29E-07
Cadmium (Cd)	7440-43-9	1.10E-03	5.91E-06	1.18E-05
Chromium (Cr)	7440-47-3	1.40E-03	7.52E-06	1.50E-05
Cobalt (Co)	7440-48-4	8.40E-05	4.51E-07	9.02E-07
Manganese (Mn)	7439-96-5	3.80E-04	2.04E-06	4.08E-06
Mercury (Hg)	7439-97-6	2.60E-04	1.40E-06	2.79E-06
Nickel (Ni)	7440-02-0	2.10E-03	1.13E-05	2.26E-05
Selenium (Se)	7782-49-2	2.40E-05	1.29E-07	2.58E-07
POM/2-Methylnaphthalene	91-57-6	2.40E-05	1.29E-07	2.58E-07
POM/3-Methylchloranthrene	56-49-5	1.80E-06	9.67E-09	1.93E-08
POM/7,12-Dimethylbenz(a)anthracene	57-97-6	1.60E-05	8.59E-08	1.72E-07
POM/Acenaphthene	83-32-9	1.80E-06	9.67E-09	1.93E-08
POM/Acenaphthylene	203-96-8	1.80E-06	9.67E-09	1.93E-08
POM/Anthracene	120-12-7	2.40E-06	1.29E-08	2.58E-08
POM/Benz(a)anthracene	56-55-3	1.80E-06	9.67E-09	1.93E-08
Benzene	71-43-2	2.10E-03	1.13E-05	2.26E-05
POM/Benzo(a)pyrene	50-32-8	1.20E-06	6.44E-09	1.29E-08
POM/Benzo(b)fluoranthene	205-99-2	1.20E-06	6.44E-09	1.29E-08
POM/Benzo(g,h,i)perylene	191-24-2	1.20E-06	6.44E-09	1.29E-08
POM/Benzo(k)fluoranthene	205-82-3	1.80E-06	9.67E-09	1.93E-08
POM/Chrysene	218-01-9	1.80E-06	9.67E-09	1.93E-08
POM/Dibenzo(a,h)anthracene	53-70-3	1.20E-06	6.44E-09	1.29E-08
Dichlorobenzene	25321-22-6	1.20E-03	6.44E-06	1.29E-05
POM/Fluoranthene	206-44-0	3.00E-06	1.61E-08	3.22E-08
POM/Fluorene	86-73-7	2.80E-06	1.50E-08	3.01E-08
Formaldehyde	50-00-0	7.50E-02	4.03E-04	8.05E-04
Hexane	110-54-3	1.80E+00	9.67E-03	1.93E-02
POM/Indeno(1,2,3-cd)pyrene	193-39-5	1.80E-06	9.67E-09	1.93E-08
Naphthalene	91-20-3	6.10E-04	3.28E-06	6.55E-06
POM/Phenanathrene	85-01-8	1.70E-05	9.13E-08	1.83E-07
POM/Pyrene	129-00-0	5.00E-06	2.68E-08	5.37E-08
Toluene	108-88-3	3.40E-03	1.83E-05	3.65E-05
Total POM			4.70E-07	9.41E-07
Total HAPs			1.01E-02	2.03E-02

Note 1: FROM AP-42 Fifth Edition, Supplement D, TABLE 1.4-2&3&4. 7/98 External Combustion Sources 1.4-9. Many emission factors < than specific value. In this case, specific value used to error on conservative side

EXAMPLE CALCULATIONS:
Maximum Hourly Emission = Max.hourly Fuel Usage rate (standard cubic feet hour) x (Pollutant E.F.)
Maximum Yearly Emission = Max.Hourly Emission Rate (lb/hr) x (Maximum Hours of Operation)

Form AI-S003(5) Supplement
Potential to Emit
Emissions Calculations
East Jordan Foundry, LLC

Flow Diagram Designation
MUA-11

Process Description:
MUA-11
Control Device: None

Natural Gas Combustion

Inputs	
5.47722	= Max. Hourly Heat Input Rate (MMBtu/hr)
1020	= MMBtu/MMscf
5369.8	= Max. Hourly Fuel Usage Rate (standard cubic feet hour)
4000	= Maximum Operation (hours/year)
21.47929	= Maximum Annual Fuel Usage (MMscf)

POLLUTANT	CAS #	Note 1 Emission Factor ($lb/10^6$ scf)	Maximum Emissions (lbs/hr)	(tpy)
PM/PM10/PM2.5	n/a	7.6	0.04	8.16E-02
NOx	n/a	100.0	0.54	1.07E+00
CO	n/a	84.0	0.45	9.02E-01
Lead	n/a	0.0005	2.68E-06	5.37E-06
SO2	n/a	0.6	0.003	6.44E-03
VOC	n/a	5.5	0.03	5.91E-02
CO_2e	n/a	120,000	644.38	1.29E+03
Arsenic (As)	7440-38-2	2.00E-04	1.07E-06	2.15E-06
Beryllium (Be)	7440-41-7	1.20E-05	6.44E-08	1.29E-07
Cadmium (Cd)	7440-43-9	1.10E-03	5.91E-06	1.18E-05
Chromium (Cr)	7440-47-3	1.40E-03	7.52E-06	1.50E-05
Cobalt (Co)	7440-48-4	8.40E-05	4.51E-07	9.02E-07
Manganese (Mn)	7439-96-5	3.80E-04	2.04E-06	4.08E-06
Mercury (Hg)	7439-97-6	2.60E-04	1.40E-06	2.79E-06
Nickel (Ni)	7440-02-0	2.10E-03	1.13E-05	2.26E-05
Selenium (Se)	7782-49-2	2.40E-05	1.29E-07	2.58E-07
POM/2-Methylnaphthalene	91-57-6	2.40E-05	1.29E-07	2.58E-07
POM/3-Methylchloranthrene	56-49-5	1.80E-06	9.67E-09	1.93E-08
POM/7,12-Dimethylbenz(a)anthracene	57-97-6	1.60E-05	8.59E-08	1.72E-07
POM/Acenaphthene	83-32-9	1.80E-06	9.67E-09	1.93E-08
POM/Acenaphthylene	203-96-8	1.80E-06	9.67E-09	1.93E-08
POM/Anthracene	120-12-7	2.40E-06	1.29E-08	2.58E-08
POM/Benz(a)anthracene	56-55-3	1.80E-06	9.67E-09	1.93E-08
Benzene	71-43-2	2.10E-03	1.13E-05	2.26E-05
POM/Benzo(a)pyrene	50-32-8	1.20E-06	6.44E-09	1.29E-08
POM/Benzo(b)fluoranthene	205-99-2	1.20E-06	6.44E-09	1.29E-08
POM/Benzo(g,h,i)perylene	191-24-2	1.20E-06	6.44E-09	1.29E-08
POM/Benzo(k)fluoranthene	205-82-3	1.80E-06	9.67E-09	1.93E-08
POM/Chrysene	218-01-9	1.80E-06	9.67E-09	1.93E-08
POM/Dibenzo(a,h)anthracene	53-70-3	1.20E-06	6.44E-09	1.29E-08
Dichlorobenzene	25321-22-6	1.20E-03	6.44E-06	1.29E-05
POM/Fluoranthene	206-44-0	3.00E-06	1.61E-08	3.22E-08
POM/Fluorene	86-73-7	2.80E-06	1.50E-08	3.01E-08
Formaldehyde	50-00-0	7.50E-02	4.03E-04	8.05E-04
Hexane	110-54-3	1.80E+00	9.67E-03	1.93E-02
POM/Indeno(1,2,3-cd)pyrene	193-39-5	1.80E-06	9.67E-09	1.93E-08
Naphthalene	91-20-3	6.10E-04	3.28E-06	6.55E-06
POM/Phenanathrene	85-01-8	1.70E-05	9.13E-08	1.83E-07
POM/Pyrene	129-00-0	5.00E-06	2.68E-08	5.37E-08
Toluene	108-88-3	3.40E-03	1.83E-05	3.65E-05
Total POM			4.70E-07	9.41E-07
Total HAPs			1.01E-02	2.03E-02

Note 1: FROM AP-42 Fifth Edition, Supplement D, TABLE 1.4-2&3&4. 7/98 External Combustion Sources 1.4-9. Many emission factors < than specific value. In this case, specific value used to error on conservative side

EXAMPLE CALCULATIONS:
Maximum Hourly Emission = Max.hourly Fuel Usage rate (standard cubic feet hour) x (Pollutant E.F.)
Maximum Yearly Emission = Max.Hourly Emission Rate (lb/hr) x (Maximum Hours of Operation)

Form AI-S003(5) Supplement
Emissions Calculations
East Jordan Foundry, LLC
Elmira, Michigan

Flow Diagram Designation
Various NG Sources

Process Description:
Various NG Sources
Control Device: None

Natural Gas Combustion

Inputs

4.656	= Max. Hourly Heat Input Rate (MMBtu/hr)
1020	= MMBtu/MMscf
4564.7	= Max. Hourly Fuel Usage Rate (standard cubic feet hour)
6000	= Maximum Operation (hours/year)
27.38824	= Maximum Annual Fuel Usage (MMscf)

POLLUTANT	CAS #	Note 1 Emission Factor ($lb/10^5$ scf)	Maximum Emissions (lbs/hr)	(tpy)
PM/PM10/PM2.5	n/a	7.6	0.03	1.04E-01
NOx	n/a	100.0	0.46	1.37E+00
CO	n/a	84.0	0.38	1.15E+00
Lead	n/a	0.0005	2.28E-06	6.85E-06
SO2	n/a	0.6	0.003	8.22E-03
VOC	n/a	5.5	0.03	7.53E-02
CO_2e	n/a	120,000	547.76	1.64E+03
Arsenic (As)	7440-38-2	2.00E-04	9.13E-07	2.74E-06
Beryllium (Be)	7440-41-7	1.20E-05	5.48E-08	1.64E-07
Cadmium (Cd)	7440-43-9	1.10E-03	5.02E-06	1.51E-05
Chromium (Cr)	7440-47-3	1.40E-03	6.39E-06	1.92E-05
Cobalt (Co)	7440-48-4	8.40E-05	3.83E-07	1.15E-06
Manganese (Mn)	7439-96-5	3.80E-04	1.73E-06	5.20E-06
Mercury (Hg)	7439-97-6	2.60E-04	1.19E-06	3.56E-06
Nickel (Ni)	7440-02-0	2.10E-03	9.59E-06	2.88E-05
Selenium (Se)	7782-49-2	2.40E-05	1.10E-07	3.29E-07
POM/2-Methylnaphthalene	91-57-6	2.40E-05	1.10E-07	3.29E-07
POM/3-Methylchloranthrene	56-49-5	1.80E-06	8.22E-09	2.46E-08
POM/7,12-Dimethylbenz(a)anthracene	57-97-6	1.60E-05	7.30E-08	2.19E-07
POM/Acenaphthene	83-32-9	1.80E-06	8.22E-09	2.46E-08
POM/Acenaphthylene	203-96-8	1.80E-06	8.22E-09	2.46E-08
POM/Anthracene	120-12-7	2.40E-06	1.10E-08	3.29E-08
POM/Benz(a)anthracene	56-55-3	1.80E-06	8.22E-09	2.46E-08
Benzene	71-43-2	2.10E-03	9.59E-06	2.88E-05
POM/Benzo(a)pyrene	50-32-8	1.20E-06	5.48E-09	1.64E-08
POM/Benzo(b)fluoranthene	205-99-2	1.20E-06	5.48E-09	1.64E-08
POM/Benzo(g,h,i)perylene	191-24-2	1.20E-06	5.48E-09	1.64E-08
POM/Benzo(k)fluoranthene	205-82-3	1.80E-06	8.22E-09	2.46E-08
POM/Chrysene	218-01-9	1.80E-06	8.22E-09	2.46E-08
POM/Dibenzo(a,h)anthracene	53-70-3	1.20E-06	5.48E-09	1.64E-08
Dichlorobenzene	25321-22-6	1.20E-03	5.48E-06	1.64E-05
POM/Fluoranthene	206-44-0	3.00E-06	1.37E-08	4.11E-08
POM/Fluorene	86-73-7	2.80E-06	1.28E-08	3.83E-08
Formaldehyde	50-00-0	7.50E-02	3.42E-04	1.03E-03
Hexane	110-54-3	1.80E+00	8.22E-03	2.46E-02
POM/Indeno(1,2,3-cd)pyrene	193-39-5	1.80E-06	8.22E-09	2.46E-08
Naphthalene	91-20-3	6.10E-04	2.78E-06	8.35E-06
POM/Phenanathrene	85-01-8	1.70E-05	7.76E-08	2.33E-07
POM/Pyrene	129-00-0	5.00E-06	2.28E-08	6.85E-08
Toluene	108-88-3	3.40E-03	1.55E-05	4.66E-05
Total POM			4.00E-07	1.20E-06
Total HAPs			8.62E-03	2.59E-02

Note 1: FROM AP-42 Fifth Edition, Supplement D, TABLE 1.4-2&3&4. 7/98 External Combustion Sources 1.4-9. Many emission factors < than specific value. In this case, specific value used to error on conservative side

EXAMPLE CALCULATIONS:
Maximum Hourly Emission = Max.hourly Fuel Usage rate (standard cubic feet hour) x (Pollutant E.F.)
Maximum Yearly Emission = Max.Hourly Emission Rate (lb/hr) x (Maximum Hours of Operation)

Form AI-S003(5) Supplement
Potential to Emit
Emissions Calculations
East Jordan Foundry, LLC

Flow Diagram Designation
EG-1

Process Description:
EG-1
Control Device:

Natural Gas Combustion

	Inputs	
Note 2	459.0	= Rating of Generator (hp)
	300.0	= Rating of Generator (KW)
	7000	= Brake Specific Fuel Consumption Btu/hp-hr (AP-42 Table 3.3-1, footnote a)
	3.2130	= Max. Hourly Heat Input Rate (MMBtu/hr)
	150.0	= Maximum Operation (hours/year)

POLLUTANT	CAS #	Note 1 Emission Factor (lb/MMBtu) Fuel Input	Maximum Emissions (lbs/hr)	(tpy)
PM	n/a	0.0099	0.032	0.002
PM10/PM2.5	n/a	0.0095	0.031	0.002
NOx	n/a	2.27	7.294	0.547
CO	n/a	3.72	11.952	0.896
Lead	n/a			
SO2	n/a	0.0006	0.002	0.000
VOC	n/a	0.0296	0.095	0.007
CO_2	n/a	110	353.43	26.51
N_2O	n/a			
Methane	n/a	0.23	0.74	0.06
CO_2e	n/a	115.75	371.9	27.89
1,1,2-Trichloroethane	79-00-5	ND	ND	ND
1,3-Butadiene	106-99-0	6.63E-04	2.13E-03	1.60E-04
1,3-Dichloropropene	542-75-6	ND	ND	ND
Acetaldehyde	75-07-0	2.79E-03	8.96E-03	6.72E-04
Acrolein	107-02-8	2.63E-03	8.45E-03	6.34E-04
Benzene	71-43-2	1.58E-03	5.08E-03	3.81E-04
Carbon Tetrachloride	56-23-5	ND	ND	ND
Chlorobenzene	108-90-7	ND	ND	ND
Chloroform	67-66-3	ND	ND	ND
Ethylbenzene	100-41-4	ND	ND	ND
Ethylene Dibromide (Dibromoethane)	106-93-4	ND	ND	ND
Ethylene Dichloride (1,2-Dichloroethane)	107-06-2	ND	ND	ND
Ethylidene Dichloride (1,1-Dichloroethane)	75-34-3	ND	ND	ND
Formaldehyde	50-00-0	2.05E-02	6.59E-02	4.94E-03
Methanol	67-56-1	3.06E-03	9.83E-03	7.37E-04
Methyl Chloride (Chloromethane)	74-87-3	4.12E-05	1.32E-04	9.93E-06
Naphthalene	91-20-3	9.71E-05	3.12E-04	2.34E-05
PAH	n/a	1.41E-04	4.53E-04	3.40E-05
Propylene Dichloride (1,2-Dichloropropane)	78-87-5	ND	ND	ND
Styrene	100-42-5	1.19E-05	3.82E-05	2.87E-06
Toluene	108-88-3	5.58E-04	1.79E-03	1.34E-04
Vinyl Chloride	75-01-4	ND	ND	ND
Xylenes (isomers and mixture)	1330-20-7	1.95E-04	6.27E-04	4.70E-05
Total HAPs			1.04E-01	7.78E-03

Note 1: FROM AP-42 Fifth Edition, Supplement F, Ch. 3.2 TABLE 3.2-3. 8/2000. Many emission factors < than detectable value, these emission factors are represented as undetectable (ND).
Note 2: Manufacturer spec sheet

Maximum Hourly Emission = Max.hourly Fuel Usage rate (standard cubic feet hour) x (Pollutant E.F.)
Maximum Yearly Emission = Max.Hourly Emission Rate (lb/hr) x (Maximum Hours of Operation)

Form AI-S003(5) Supplement
Potential to Emit
Emissions Calculations
East Jordan Foundry, LLC

Flow Diagram Designation
EG-2

Process Description:
EG-2
Control Device:

Natural Gas Combustion

	Inputs	
Note 2	459.0	= Rating of Generator (hp)
	300.0	= Rating of Generator (KW)
	7000	= Brake Specific Fuel Consumption Btu/hp-hr (AP-42 Table 3.3-1, footnote a)
	3.2130	= Max. Hourly Heat Input Rate (MMBtu/hr)
	150.0	= Maximum Operation (hours/year)

POLLUTANT	CAS #	Note 1 Emission Factor (lb/MMBtu) Fuel Input	Maximum Emissions (lbs/hr)	Maximum Emissions (tpy)
PM	n/a	0.0099	0.032	0.002
PM10/PM2.5	n/a	0.0095	0.031	0.002
NOx	n/a	2.27	7.294	0.547
CO	n/a	3.72	11.952	0.896
Lead	n/a			
SO2	n/a	0.0006	0.002	0.000
VOC	n/a	0.0296	0.095	0.007
CO_2	n/a	110	353.43	26.51
N_2O	n/a			
Methane	n/a	0.23	0.74	0.06
CO_2e	n/a	115.75	371.9	27.89
1,1,2-Trichloroethane	79-00-5	ND	ND	ND
1,3-Butadiene	106-99-0	6.63E-04	2.13E-03	1.60E-04
1,3-Dichloropropene	542-75-6	ND	ND	ND
Acetaldehyde	75-07-0	2.79E-03	8.96E-03	6.72E-04
Acrolein	107-02-8	2.63E-03	8.45E-03	6.34E-04
Benzene	71-43-2	1.58E-03	5.08E-03	3.81E-04
Carbon Tetrachloride	56-23-5	ND	ND	ND
Chlorobenzene	108-90-7	ND	ND	ND
Chloroform	67-66-3	ND	ND	ND
Ethylbenzene	100-41-4	ND	ND	ND
Ethylene Dibromide (Dibromoethane)	106-93-4	ND	ND	ND
Ethylene Dichloride (1,2-Dichloroethane)	107-06-2	ND	ND	ND
Ethylidene Dichloride (1,1-Dichloroethane)	75-34-3	ND	ND	ND
Formaldehyde	50-00-0	2.05E-02	6.59E-02	4.94E-03
Methanol	67-56-1	3.06E-03	9.83E-03	7.37E-04
Methyl Chloride (Chloromethane)	74-87-3	4.12E-05	1.32E-04	9.93E-06
Naphthalene	91-20-3	9.71E-05	3.12E-04	2.34E-05
PAH	n/a	1.41E-04	4.53E-04	3.40E-05
Propylene Dichloride (1,2-Dichloropropane)	78-87-5	ND	ND	ND
Styrene	100-42-5	1.19E-05	3.82E-05	2.87E-06
Toluene	108-88-3	5.58E-04	1.79E-03	1.34E-04
Vinyl Chloride	75-01-4	ND	ND	ND
Xylenes (isomers and mixture)	1330-20-7	1.95E-04	6.27E-04	4.70E-05
Total HAPs			1.04E-01	7.78E-03

Note 1: FROM AP-42 Fifth Edition, Supplement F, Ch. 3.2 TABLE 3.2-3. 8/2000. Many emission factors < than detectable value, these emission factors are represented as undetectable (ND).
Note 2: Manufacturer spec sheet

Maximum Hourly Emission = Max.hourly Fuel Usage rate (standard cubic feet hour) x (Pollutant E.F.)
Maximum Yearly Emission = Max.Hourly Emission Rate (lb/hr) x (Maximum Hours of Operation)

Form AI-S003(5) Supplement
Potential to Emit
Emissions Calculations
East Jordan Foundry, LLC

Flow Diagram Designation
Road Fug. Dust
East Jordan Foundry, LLC
Paved Road Calculation - Projected

AP-42 (1/11 Version) Ch. 13.2.1
Paved Road Calculation - Projected $E = k * (sL/2)^{0.65} * (W/3)^{1.5}$

E = PM-10 emissions factor (lb/VMT)
k = Base emission factor (lb/VMT) - PM-10
sL = Silt loading (g/m^2)
W = Mean vehicle weight (tons)

0.4 Round trip distance per vehicle (mi)

Paved Roadways	Number of Round Trips/day	k lb/VMT	sL g/m^2	W tons	E lb/VMT	Control Efficiency	Miles Traveled Projected Miles/Year	Emissions (TPY) PM	PM10	PM2.5 [f]	Emissions (lb/hr) PM	PM10	PM2.5
	Note 2	Note 1				Note 4	Note 3				Note 5	Note 5	Note 5,6
Employee Parking Lot -Cars PM	300	0.082	9.7	2.5	0.17	75	120.0	0.003			0.001		
Employee Parking Lot Cars PM-10	300	0.016	9.7	2.5	0.03	75	120.0		0.001			0.000	
Employee Parking Lot Cars PM-2.5	300	0.016	9.7	2.5	0.03	75	120.0			0.001			0.000
Shipping Castings-PM	26	0.082	9.7	40	11.14	75	10.4	0.014			0.003		
Shipping Castings-PM-10	26	0.016	9.7	40	2.17	75	10.4		0.003			0.001	
Shipping Castings-PM-2.5	26	0.016	9.7	40	2.17	75	10.4			0.003			0.001
Receiving Scrap Metal- PM	26	0.082	9.7	40	11.14	75	10.4	0.014			0.003		
Receiving Scrap Metal PM-10	26	0.016	9.7	40	2.17	75	10.4		0.003			0.001	
Receiving Scrap Metal PM-2.5	26	0.016	9.7	40	2.17	75	10.4			0.003			0.001
Receiving Sand- PM	7	0.082	9.7	40	11.14	75	2.8	0.004			0.001		
Receiving Sand- PM-10	7	0.016	9.7	40	2.17	75	2.8		0.001			0.000	
Receiving Sand- PM-2.5	7	0.016	9.7	40	2.17	75	2.8			0.001			0.000
Receiving Other Materials- PM	5	0.082	9.7	40	11.14	75	2.0	0.003			0.001		
Receiving Other Materials- PM-10	5	0.016	9.7	40	2.17	75	2.0		0.001			0.000	
Receiving Other Materials- PM-2.5	5	0.016	9.7	40	2.17	75	2.0			0.001			0.000
Removing Sand Pit Waste -PM	2	0.082	9.7	30	7.24	75	0.8	0.001			0.000		
Removing Sand Pit Waste -PM-10	2	0.016	9.7	30	1.41	75	0.8		0.000			0.000	
Removing Sand Pit Waste -PM-2.5	2	0.016	9.7	30	1.41	75	0.8			0.000			0.000
							TOTAL:	**0.039**	**0.008**	**0.008**	**0.009**	**0.002**	**0.002**

Note 1: Numbers from AP-42 (Version 1/11) Ch.13.2.1 Table 13.2.1-1
Note 2: Emissions estimate based on figures provided by EJIW and on Maximum production levels. Estimate high to be conservative.
Note 3: Emissions based on potential metal poured of 180,000 tpy
Note 4: Control efficiency of 75% for street sweeping from RACM, Tabe 2.1.1-3 Ohio EPA
Note 5: Lb/hr emission rate calculated by multiplying the tpy emission rate by 2000 lbs/ton and dividing by number of Maximum operating rate hours/yr.
Note 6: Assumed PM2.5 is equal to PM10

PROPOSED OPERATING SCHEDULE
24 hours/day
8,760 hours/year

Form AI-S003(5) Supplement
Potential to Emit
Emissions Calculations
East Jordan Foundry, LLC

Maximum Yearly Capacity
MMCF/Year

Flow Diagram Designation
Waste Sand Dust Handling

Maximum Hourly Capacity
MMCF/Hour

Process Description:
East Jordan Foundry, LLC
Waste Sand Dust Handling
Control Device: Baghouse H/J
SCC Code:
Control Device Outlet: gr/dscf
Airflow: acfm
Stack Gas Temperature: 100 °F

Facility Process Name:	**Criteria Pollutants**								
Waste Sand Dust Handling									
Emission Factor Basis:	**PM**	**PM10**	**PM2.5**	**SOx**	**NOx**	**VOC**	**CO**	**Lead**	**CO_2e**
Emission Factors:									
(source)	Note 1	Note 1	Note 1						
Capture Efficiency									
Control Efficiency									
Building Capt. Eff									
Maximum Stack Emission Rate:									
Hourly (lb/hr)	See Controlling BH(s) for Stk Emissions								
Annual (TPY)	See Controlling BH(s) for Stk Emissions								
Maximum Fugitive Emission Rate:									
Hourly (lb/hr)									
Annual (TPY)									
Total Emission Rate:									
Hourly (lb/hr)									
Annual (TPY)									

PROPOSED OPERATING SCHEDULE
24 HRS/DAY
6,000 HRS/YEAR

Note 1: No fugitives are expected from the operation.

EXAMPLE CALCULATIONS:
Maximum Stack Emission Rate (lb/hr) {PM,PM-10} =(gr/acfm) x (acfm) x (1 lb / 7000 grains) x (60 min / 1 hr)
Maximum Annual (Ton/yr) stack Emission Rates = (lb/hr emission rate) x (hours of operation per year at max. rate) x (ton/2000 lbs)
Maximum Fugitive Emission Rate (lb/hr) = ((1 - Capture Efficiency/100) x (Emission Factor) x (Melt ton/hr) x (1-(Settling Factor)/100)
Maximum Annual Fugitive Emissions (ton/yr)= (Hourly fugitive emissions (lb/hr)/ hourly Process rate (ton/hr) x (Annual process rate (tons/yr) x (ton/2000 lbs)
Total Emission Rate (lb/hr) = (Maximum Stack Emission Rate lb/hr) + (Maximum Fugitive Emission Rate lb/hr)
Total Emission Rates Annual (TPY)= (annual stack emissions (ton/yr)) + (annual fugitive emissions (ton/yr))

Form AI-S003(5) Supplement
Potential to Emit
Emissions Calculations
East Jordan Foundry, LLC

Maximum Yearly Capacity
MMCF/Year

Flow Diagram Designation
Baghouses AB

Maximum Hourly Capacity
MMCF/Hour

Process Description:
East Jordan Foundry, LLC
Baghouses AB
Control Device: Baghouse AB
SCC Code:
Control Device Outlet: 0.0020 gr/dscf
Airflow: 168,000 acfm
Stack Gas Temperature: 100 °F

Facility Process Name:	Criteria Pollutants								
Baghouses AB									
Emission Factor Basis:	**PM**	**PM10**	**PM2.5**	**SOx**	**NOx**	**VOC**	**CO**	**Lead**	**CO_2e**
Emission Factors:									
(source)									
Capture Efficiency									
Control Efficiency									
Building Capt. Eff									
Maximum Stack Emission Rate:									
Hourly (lb/hr)	2.726	2.726	2.726						
Annual (TPY)	**8.177**	**8.177**	**8.177**						
Maximum Fugitive Emission Rate:									
Hourly (lb/hr)									
Annual (TPY)									
Total Emission Rate:									
Hourly (lb/hr)	2.726	2.726	2.726						
Annual (TPY)	**8.177**	**8.177**	**8.177**						

PROPOSED OPERATING SCHEDULE
24 HRS/DAY
6,000 HRS/YEAR

Note 1: These baghouses control EIF Melting, Pouring & Cooling, Charge Handling, and Hot Metal Transfer

EXAMPLE CALCULATIONS:
Maximum Stack Emission Rate (lb/hr) {PM,PM-10} =(gr/acfm) x (acfm) x (1 lb / 7000 grains) x (60 min / 1 hr)
Maximum Annual (Ton/yr) stack Emission Rates = (lb/hr emission rate) x (hours of operation per year at max. rate) x (ton/2000 lbs)
Maximum Fugitive Emission Rate (lb/hr) = ((1 - Capture Efficiency/100) x (Emission Factor) x (Melt ton/hr) x (1-(Settling Factor)/100)
Maximum Annual Fugitive Emissions (ton/yr)= (Hourly fugitive emissions (lb/hr)/ hourly Process rate (ton/hr) x (Annual process rate (tons/yr) x (ton/2000 lbs)
Total Emission Rate (lb/hr) = (Maximum Stack Emission Rate lb/hr) + (Maximum Fugitive Emission Rate lb/hr)
Total Emission Rates Annual (TPY)= (annual stack emissions (ton/yr)) + (annual fugitive emissions (ton/yr))

Form AI-S003(5) Supplement
Potential to Emit
Emissions Calculations
East Jordan Foundry, LLC

Maximum Yearly Capacity
MMCF/Year

Flow Diagram Designation
Baghouse C

Maximum Hourly Capacity
MMCF/Hour

Process Description:
East Jordan Foundry, LLC
Baghouse C
Control Device: Baghouse C
SCC Code:
Control Device Outlet: 0.0015 gr/dscf
Airflow: 105,000 acfm
Stack Gas Temperature: 100 °F

Facility Process Name:	Criteria Pollutants								
Baghouse C									
Emission Factor Basis:	PM	PM10	PM2.5	SOx	NOx	VOC	CO	Lead	CO_2e
Emission Factors:									
(source)									
Capture Efficiency									
Control Efficiency									
Building Capt. Eff									
Maximum Stack Emission Rate:									
Hourly (lb/hr)	1.278	1.278	1.278						
Annual (TPY)	3.833	3.833	3.833						
Maximum Fugitive Emission Rate:									
Hourly (lb/hr)									
Annual (TPY)									
Total Emission Rate:									
Hourly (lb/hr)	1.278	1.278	1.278						
Annual (TPY)	3.833	3.833	3.833						

PROPOSED OPERATING SCHEDULE
22 HRS/DAY
6,000 HRS/YEAR

Note 1: This baghouse controls portions of Shakeout

EXAMPLE CALCULATIONS:
Maximum Stack Emission Rate (lb/hr) {PM,PM-10} =(gr/acfm) x (acfm) x (1 lb / 7000 grains) x (60 min / 1 hr)
Maximum Annual (Ton/yr) stack Emission Rates = (lb/hr emission rate) x (hours of operation per year at max. rate) x (ton/2000 lbs)
Maximum Fugitive Emission Rate (lb/hr) = ((1 - Capture Efficiency/100) x (Emission Factor) x (Melt ton/hr) x (1-(Settling Factor)/100)
Maximum Annual Fugitive Emissions (ton/yr)= (Hourly fugitive emissions (lb/hr)/ hourly Process rate (ton/hr) x (Annual process rate (tons/yr) x (ton/2000 lbs)
Total Emission Rate (lb/hr) = (Maximum Stack Emission Rate lb/hr) + (Maximum Fugitive Emission Rate lb/hr)
Total Emission Rates Annual (TPY)= (annual stack emissions (ton/yr)) + (annual fugitive emissions (ton/yr))

Form AI-S003(5) Supplement
Potential to Emit
Emissions Calculations
East Jordan Foundry, LLC

Maximum Yearly Capacity
MMCF/Year

Flow Diagram Designation
Baghouse D

Maximum Hourly Capacity
MMCF/Hour

Process Description:
East Jordan Foundry, LLC
Baghouse D
Control Device: Baghouse D
SCC Code:
Control Device Outlet: 0.0020 gr/dscf
Airflow: 84,000 acfm
Stack Gas Temperature: 100 °F

Facility Process Name:	Criteria Pollutants								
Baghouse D									
Emission Factor Basis:	PM	PM10	PM2.5	SOx	NOx	VOC	CO	Lead	CO_2e
Emission Factors:									
(source)									
Capture Efficiency									
Control Efficiency									
Building Capt. Eff									
Maximum Stack Emission Rate:									
Hourly (lb/hr)	1.363	1.363	1.363						
Annual (TPY)	4.089	4.089	4.089						
Maximum Fugitive Emission Rate:									
Hourly (lb/hr)									
Annual (TPY)									
Total Emission Rate:									
Hourly (lb/hr)	1.363	1.363	1.363						
Annual (TPY)	4.089	4.089	4.089						

PROPOSED OPERATING SCHEDULE
24 HRS/DAY
6,000 HRS/YEAR

Note 1: This baghouse controls portions of Cooling and Shakeout

EXAMPLE CALCULATIONS:
Maximum Stack Emission Rate (lb/hr) {PM,PM-10} =(gr/acfm) x (acfm) x (1 lb / 7000 grains) x (60 min / 1 hr)
Maximum Annual (Ton/yr) stack Emission Rates = (lb/hr emission rate) x (hours of operation per year at max. rate) x (ton/2000 lbs)
Maximum Fugitive Emission Rate (lb/hr) = ((1 - Capture Efficiency/100) x (Emission Factor) x (Melt ton/hr) x (1-(Settling Factor)/100)
Maximum Annual Fugitive Emissions (ton/yr)= (Hourly fugitive emissions (lb/hr)/ hourly Process rate (ton/hr) x (Annual process rate (tons/yr) x (ton/2000 lbs)
Total Emission Rate (lb/hr) = (Maximum Stack Emission Rate lb/hr) + (Maximum Fugitive Emission Rate lb/hr)
Total Emission Rates Annual (TPY)= (annual stack emissions (ton/yr)) + (annual fugitive emissions (ton/yr))

Form AI-S003(5) Supplement
Potential to Emit
Emissions Calculations
East Jordan Foundry, LLC

Maximum Yearly Capacity
MMCF/Year

Flow Diagram Designation
Baghouse E

Maximum Hourly Capacity
MMCF/Hour

Process Description:
East Jordan Foundry, LLC
Baghouse E

Control Device:	Baghouse E
SCC Code:	
Control Device Outlet:	0.0020 gr/dscf
Airflow:	64,000 acfm
Stack Gas Temperature:	100 °F

Facility Process Name:	Criteria Pollutants								
Baghouse E									
Emission Factor Basis:	PM	PM10	PM2.5	SOx	NOx	VOC	CO	Lead	CO_2e
Emission Factors:									
(source)									
Capture Efficiency									
Control Efficiency									
Building Capt. Eff									
Maximum Stack Emission Rate:									
Hourly (lb/hr)	1.038	1.038	1.038						
Annual (TPY)	**3.115**	**3.115**	**3.115**						
Maximum Fugitive Emission Rate:									
Hourly (lb/hr)									
Annual (TPY)									
Total Emission Rate:									
Hourly (lb/hr)	1.038	1.038	1.038						
Annual (TPY)	**3.115**	**3.115**	**3.115**						

PROPOSED OPERATING SCHEDULE
22 HRS/DAY
6,000 HRS/YEAR

Note 1: This baghouse controls Charge Handling, Shakeout, and Sand Handling & Storage

EXAMPLE CALCULATIONS:
Maximum Stack Emission Rate (lb/hr) {PM,PM-10} =(gr/acfm) x (acfm) x (1 lb / 7000 grains) x (60 min / 1 hr)
Maximum Annual (Ton/yr) stack Emission Rates = (lb/hr emission rate) x (hours of operation per year at max. rate) x (ton/2000 lbs)
Maximum Fugitive Emission Rate (lb/hr) = ((1 - Capture Efficiency/100) x (Emission Factor) x (Melt ton/hr) x (1-(Settling Factor)/100)
Maximum Annual Fugitive Emissions (ton/yr)= (Hourly fugitive emissions (lb/hr)/ hourly Process rate (ton/hr) x (Annual process rate (tons/yr) x (ton/2000 lbs)
Total Emission Rate (lb/hr) = (Maximum Stack Emission Rate lb/hr) + (Maximum Fugitive Emission Rate lb/hr)
Total Emission Rates Annual (TPY)= (annual stack emissions (ton/yr)) + (annual fugitive emissions (ton/yr))

Form AI-S003(5) Supplement
Potential to Emit
Emissions Calculations
East Jordan Foundry, LLC

Maximum Yearly Capacity
MMCF/Year

Flow Diagram Designation
Baghouse F

Maximum Hourly Capacity
MMCF/Hour

Process Description:
East Jordan Foundry, LLC
Baghouse F
Control Device: Baghouse F
SCC Code:
Control Device Outlet: 0.0020 gr/dscf
Airflow: 64,000 acfm
Stack Gas Temperature: 100 °F

Facility Process Name:	Criteria Pollutants								
Baghouse F									
Emission Factor Basis:	**PM**	**PM10**	**PM2.5**	**SOx**	**NOx**	**VOC**	**CO**	**Lead**	**CO_2e**
Emission Factors:									
(source)									
Capture Efficiency									
Control Efficiency									
Building Capt. Eff									
Maximum Stack Emission Rate:									
Hourly (lb/hr)	1.038	1.038	1.038						
Annual (TPY)	**3.115**	**3.115**	**3.115**						
Maximum Fugitive Emission Rate:									
Hourly (lb/hr)									
Annual (TPY)									
Total Emission Rate:									
Hourly (lb/hr)	1.038	1.038	1.038						
Annual (TPY)	**3.115**	**3.115**	**3.115**						

PROPOSED OPERATING SCHEDULE
22 HRS/DAY
6,000 HRS/YEAR

Note 1: This baghouse controls Sand Handling & Storage

EXAMPLE CALCULATIONS:
Maximum Stack Emission Rate (lb/hr) {PM,PM-10} =(gr/acfm) x (acfm) x (1 lb / 7000 grains) x (60 min / 1 hr)
Maximum Annual (Ton/yr) stack Emission Rates = (lb/hr emission rate) x (hours of operation per year at max. rate) x (ton/2000 lbs)
Maximum Fugitive Emission Rate (lb/hr) = ((1 - Capture Efficiency/100) x (Emission Factor) x (Melt ton/hr) x (1-(Settling Factor)/100)
Maximum Annual Fugitive Emissions (ton/yr)= (Hourly fugitive emissions (lb/hr)/ hourly Process rate (ton/hr) x (Annual process rate (tons/yr) x (ton/2000 lbs)
Total Emission Rate (lb/hr) = (Maximum Stack Emission Rate lb/hr) + (Maximum Fugitive Emission Rate lb/hr)
Total Emission Rates Annual (TPY)= (annual stack emissions (ton/yr)) + (annual fugitive emissions (ton/yr))

Form AI-S003(5) Supplement
Potential to Emit
Emissions Calculations
East Jordan Foundry, LLC

Maximum Yearly Capacity
MMCF/Year

Flow Diagram Designation
Baghouse G

Maximum Hourly Capacity
MMCF/Hour

Process Description:
East Jordan Foundry, LLC
Baghouse G
Control Device: Baghouse G
SCC Code:
Control Device Outlet: 0.0020 gr/dscf
Airflow: 42,000 acfm
Stack Gas Temperature: 100 °F

Facility Process Name:	Criteria Pollutants								
Baghouse G									
Emission Factor Basis:	PM	PM10	PM2.5	SOx	NOx	VOC	CO	Lead	CO_2e
Emission Factors:									
(source)									
Capture Efficiency									
Control Efficiency									
Building Capt. Eff									
Maximum Stack Emission Rate:									
Hourly (lb/hr)	0.681	0.681	0.681						
Annual (TPY)	**2.044**	**2.044**	**2.044**						
Maximum Fugitive Emission Rate:									
Hourly (lb/hr)									
Annual (TPY)									
Total Emission Rate:									
Hourly (lb/hr)	0.681	0.681	0.681						
Annual (TPY)	**2.044**	**2.044**	**2.044**						

PROPOSED OPERATING SCHEDULE
22 HRS/DAY
6,000 HRS/YEAR

Note 1: This baghouse controls Sand Handling & Storage

EXAMPLE CALCULATIONS:
Maximum Stack Emission Rate (lb/hr) {PM,PM-10} =(gr/acfm) x (acfm) x (1 lb / 7000 grains) x (60 min / 1 hr)
Maximum Annual (Ton/yr) stack Emission Rates = (lb/hr emission rate) x (hours of operation per year at max. rate) x (ton/2000 lbs)
Maximum Fugitive Emission Rate (lb/hr) = ((1 - Capture Efficiency/100) x (Emission Factor) x (Melt ton/hr) x (1-(Settling Factor)/100)
Maximum Annual Fugitive Emissions (ton/yr)= (Hourly fugitive emissions (lb/hr)/ hourly Process rate (ton/hr) x (Annual process rate (tons/yr) x (ton/2000 lbs)
Total Emission Rate (lb/hr) = (Maximum Stack Emission Rate lb/hr) + (Maximum Fugitive Emission Rate lb/hr)
Total Emission Rates Annual (TPY)= (annual stack emissions (ton/yr)) + (annual fugitive emissions (ton/yr))

Form AI-S003(5) Supplement
Potential to Emit
Emissions Calculations
East Jordan Foundry, LLC

Maximum Yearly Capacity
MMCF/Year

Flow Diagram Designation
Baghouses HJ

Maximum Hourly Capacity
MMCF/Hour

Process Description:
East Jordan Foundry, LLC
Baghouses HJ
Control Device: Baghouse HJ
SCC Code:
Control Device Outlet: 0.0010 gr/dscf
Airflow: 210,000 acfm
Stack Gas Temperature: 100 °F

Facility Process Name:	Criteria Pollutants								
Baghouses HJ									
Emission Factor Basis:	**PM**	**PM10**	**PM2.5**	**SOx**	**NOx**	**VOC**	**CO**	**Lead**	**CO_2e**
Emission Factors:									
(source)									
Capture Efficiency									
Control Efficiency									
Building Capt. Eff									
Maximum Stack Emission Rate:									
Hourly (lb/hr)	1.704	1.704	1.704						
Annual (TPY)	**5.111**	**5.111**	**5.111**						
Maximum Fugitive Emission Rate:									
Hourly (lb/hr)									
Annual (TPY)									
Total Emission Rate:									
Hourly (lb/hr)	1.704	1.704	1.704						
Annual (TPY)	**5.111**	**5.111**	**5.111**						

PROPOSED OPERATING SCHEDULE
24 HRS/DAY
6,000 HRS/YEAR

Note 1: These baghouses control Charge Handling, Sand Handling & Stroage, Grinding, Shotblast, and Waste Sand Dust Handling

EXAMPLE CALCULATIONS:
Maximum Stack Emission Rate (lb/hr) {PM,PM-10} =(gr/acfm) x (acfm) x (1 lb / 7000 grains) x (60 min / 1 hr)
Maximum Annual (Ton/yr) stack Emission Rates = (lb/hr emission rate) x (hours of operation per year at max. rate) x (ton/2000 lbs)
Maximum Fugitive Emission Rate (lb/hr) = ((1 - Capture Efficiency/100) x (Emission Factor) x (Melt ton/hr) x (1-(Settling Factor)/100)
Maximum Annual Fugitive Emissions (ton/yr)= (Hourly fugitive emissions (lb/hr)/ hourly Process rate (ton/hr) x (Annual process rate (tons/yr) x (ton/2000 lbs)
Total Emission Rate (lb/hr) = (Maximum Stack Emission Rate lb/hr) + (Maximum Fugitive Emission Rate lb/hr)
Total Emission Rates Annual (TPY)= (annual stack emissions (ton/yr)) + (annual fugitive emissions (ton/yr))

Form AI-S003(5) Supplement
Potential to Emit
Emissions Calculations
East Jordan Foundry, LLC

Maximum Yearly Capacity
MMCF/Year

Flow Diagram Designation
Baghouse K

Maximum Hourly Capacity
MMCF/Hour

Process Description:
East Jordan Foundry, LLC
Baghouse K

Control Device:	Baghouse K
SCC Code:	
Control Device Outlet:	0.0020 gr/dscf
Airflow:	21,000 acfm
Stack Gas Temperature:	100 °F

Facility Process Name:	Criteria Pollutants								
Baghouse K									
Emission Factor Basis:	**PM**	**PM10**	**PM2.5**	**SOx**	**NOx**	**VOC**	**CO**	**Lead**	**CO_2e**
Emission Factors:									
(source)									
Capture Efficiency									
Control Efficiency									
Building Capt. Eff									
Maximum Stack Emission Rate:									
Hourly (lb/hr)	0.341	0.341	0.341						
Annual (TPY)	**1.022**	**1.022**	**1.022**						
Maximum Fugitive Emission Rate:									
Hourly (lb/hr)									
Annual (TPY)									
Total Emission Rate:									
Hourly (lb/hr)	0.341	0.341	0.341						
Annual (TPY)	**1.022**	**1.022**	**1.022**						

PROPOSED OPERATING SCHEDULE
22 HRS/DAY
6,000 HRS/YEAR

Note 1: This baghouse controls Ladle Repair

EXAMPLE CALCULATIONS:
Maximum Stack Emission Rate (lb/hr) {PM,PM-10} =(gr/acfm) x (acfm) x (1 lb / 7000 grains) x (60 min / 1 hr)
Maximum Annual (Ton/yr) stack Emission Rates = (lb/hr emission rate) x (hours of operation per year at max. rate) x (ton/2000 lbs)
Maximum Fugitive Emission Rate (lb/hr) = ((1 - Capture Efficiency/100) x (Emission Factor) x (Melt ton/hr) x (1-(Settling Factor)/100)
Maximum Annual Fugitive Emissions (ton/yr)= (Hourly fugitive emissions (lb/hr)/ hourly Process rate (ton/hr) x (Annual process rate (tons/yr) x (ton/2000 lbs)
Total Emission Rate (lb/hr) = (Maximum Stack Emission Rate lb/hr) + (Maximum Fugitive Emission Rate lb/hr)
Total Emission Rates Annual (TPY)= (annual stack emissions (ton/yr)) + (annual fugitive emissions (ton/yr))

Form AI-S003(5) Supplement
Potential to Emit
Emissions Calculations
East Jordan Foundry, LLC

Maximum Yearly Capacity
MMCF/Year

Flow Diagram Designation
Baghouse L

Maximum Hourly Capacity
MMCF/Hour

Process Description:
East Jordan Foundry, LLC
Baghouse L
Control Device: Baghouse L
SCC Code:
Control Device Outlet: 0.0020 gr/dscf
Airflow: 21,000 acfm
Stack Gas Temperature: 100 °F

Facility Process Name:	Criteria Pollutants								
Baghouse L									
Emission Factor Basis:	PM	PM10	PM2.5	SOx	NOx	VOC	CO	Lead	CO_2e
Emission Factors:									
(source)									
Capture Efficiency									
Control Efficiency									
Building Capt. Eff									
Maximum Stack Emission Rate:									
Hourly (lb/hr)	0.341	0.341	0.341						
Annual (TPY)	**1.022**	**1.022**	**1.022**						
Maximum Fugitive Emission Rate:									
Hourly (lb/hr)									
Annual (TPY)									
Total Emission Rate:									
Hourly (lb/hr)	0.341	0.341	0.341						
Annual (TPY)	**1.022**	**1.022**	**1.022**						

PROPOSED OPERATING SCHEDULE
24 HRS/DAY
6,000 HRS/YEAR

Note 1: This baghouse controls PUCB Coremaking and Shell Coremaking

EXAMPLE CALCULATIONS:
Maximum Stack Emission Rate (lb/hr) {PM,PM-10} =(gr/acfm) x (acfm) x (1 lb / 7000 grains) x (60 min / 1 hr)
Maximum Annual (Ton/yr) stack Emission Rates = (lb/hr emission rate) x (hours of operation per year at max. rate) x (ton/2000 lbs)
Maximum Fugitive Emission Rate (lb/hr) = ((1 - Capture Efficiency/100) x (Emission Factor) x (Melt ton/hr) x (1-(Settling Factor)/100)
Maximum Annual Fugitive Emissions (ton/yr)= (Hourly fugitive emissions (lb/hr)/ hourly Process rate (ton/hr) x (Annual process rate (tons/yr) x (ton/2000 lbs)
Total Emission Rate (lb/hr) = (Maximum Stack Emission Rate lb/hr) + (Maximum Fugitive Emission Rate lb/hr)
Total Emission Rates Annual (TPY)= (annual stack emissions (ton/yr)) + (annual fugitive emissions (ton/yr))

EGLE

RENEWABLE OPERATING PERMIT APPLICATION
AI-001: ADDITIONAL INFORMATION

This information is required by Article II, Chapter 1, Part 55 (Air Pollution Control) of P.A. 451 of 1994, as amended, and the Federal Clean Air Act of 1990. Failure to obtain a permit required by Part 55 may result in penalties and/or imprisonment. Please type or print clearly. Refer to instructions for additional information to complete this form.

SRN: N6052	Section Number (if applicable):

1. Additional Information ID
AI-S-003(6)

Additional Information

2. Is This Information Confidential? ☐ Yes ☒ No

6. Does this stationary source emit any hazardous air pollutants (HAPs) regulated by the federal Clean Air Act, Section 112? If Yes, include potential and actual emission calculations for HAPs, including fugitive emissions on an AI-001 Form.

Yes, See attached potential and actual HAP emission calculations. Actual criteria pollutant emissions have also been included.

CY2019 actual emissions of HAPs and criteria pollutants were determined by extrapolating materials, production and hours through September.

Form AI-S-003(6) Supplement
Potential to Emit
HAPs Emissions Summary
East Jordan Foundry, LLC

Hazardous Air Pollutant Emissions Summary

Pollutant	CAS #	EIF Melting (tpy)	In-Duct Burners (tpy)	Ladle Heaters (tpy)	Total Pouring Operations (tpy)			Total Mold Cooling Operations (tpy)			Total Shakeout Operations (tpy)			Shell Coremaking (tpy)	Shell Core NG (tpy)	PUCB Coremaking (tpy)	Mold & Core Room Chemicals (tpy)	Asphaltic Dip Tank Post Heater (tpy)
Antimony (Sb)	7440-36-0							3.97E-05			2.43E-05							
Arsenic (As)	7440-38-2		8.82E-07	1.68E-05	1.45E-05										1.76E-06			2.14E-06
Beryllium (Be)	7440-41-7		5.29E-08	1.01E-06											1.06E-07			1.28E-07
Cadmium (Cd)	7440-43-9		4.85E-06	9.22E-05	1.12E-05			2.80E-05			5.34E-05				9.71E-06			1.18E-05
Chromium (Cr)	7440-47-3	0.011	6.18E-06	1.17E-04	8.56E-05			2.00E-04			9.60E-04				1.24E-05			1.50E-05
Cobalt (Co)	7440-48-4		3.71E-07	7.04E-06	6.53E-03			1.10E-04			7.97E-04				7.41E-07			8.99E-07
Lead (Pb)	7439-92-1	0.005	2.21E-06	4.19E-05											4.41E-06			5.35E-06
Manganese (Mn)	7439-96-5	0.026	1.68E-06	3.19E-05	2.60E-03			7.17E-04			2.39E-03				3.35E-06			4.07E-06
Mercury (Hg)	7439-97-6		1.15E-06	2.18E-05											2.29E-06			2.78E-06
Nickel (Ni)	7440-02-0	0.004	9.26E-06	1.76E-04				2.76E-04			2.13E-03				1.85E-05			2.25E-05
Selenium (Se)	7782-49-2		1.06E-07	2.01E-06											2.12E-07			2.57E-07
1,2,4 Trimethylbenzene	95-63-3															0.029		
1,3-Butadiene	106-99-0																	
Acetaldehyde	75-07-0				2.68E-02			2.75E-01			3.70E+00						0.0001	
Acrolein	107-02-8																	
Dimethylnaphthalenes	28804-88-8																	
Cresol	1319-77-3																	
Methylnaphthalenes	90-12-0																	
Propionaldehyde	123-38-6							3.64E-03			3.65E-01							
Methylene diphenyl diisocyanate (MDI)	101-68-8																	
4,4-methylenedianiline (MBA)	101-77-9																	
Formaldehyde	50-00-0		3.31E-04	6.29E-03	1.67E-02			1.71E-01			1.64E+00			0.300	6.62E-04			8.03E-04
Cumene	98-82-8				8.51E-04			1.23E-02			2.44E-02					0.002		
Benzene	71-43-2		9.26E-06	1.76E-04	2.23E-01			2.90E+00			1.72E+00				1.85E-05			2.25E-05
O-Xylene	95-47-6				1.73E-02			3.16E-01			3.40E-01							
M-Xylene	108-38-3				3.90E-02			6.11E-01			8.00E-01							
Methanol	67-56-1																0.001	
Methyl Chloride	74-87-3																	
Phenol	108-95-2				2.94E-02			5.53E-01			1.79E+00			1.200				
Naphthalene	91-20-3		2.69E-06	5.11E-05	1.74E-02			2.48E-01			5.36E-01				5.38E-06	0.044		6.53E-06
Ethyl Benzene	100-41-4				8.83E-03			1.50E-01			1.86E-01							
Hydrogen Flouride	7664-39-3																	
Toluene	108-88-3		1.50E-05	2.85E-04	9.73E-02			1.56E+00			1.41E+00				3.00E-05			3.64E-05
P-Xylene	106-42-3																	
Hexane	110-54-3		7.94E-03	1.51E-01											1.59E-02			1.93E-02
Xylenes	1330-20-7				5.63E-02			9.27E-01			1.14E+00							
POM/2-Methylnaphthalene	91-57-6		1.06E-07	2.01E-06											2.12E-07			2.57E-07
POM/3-Methylchloranthrene	56-49-5		7.94E-09	1.51E-07											1.59E-08			1.93E-08
POM/7,12-Dimethylbenz(a)anthracene	57-97-6		7.06E-08	1.34E-06											1.41E-07			1.71E-07
POM/Acenaphthene	83-32-9		7.94E-09	1.51E-07											1.59E-08			1.93E-08
POM/Acenaphthylene	208-96-8		7.94E-09	1.51E-07											1.59E-08			1.93E-08
POM/Anthracene	120-12-7		1.06E-08	2.01E-07											2.12E-08			2.57E-08
POM/Benz(a)anthracene	56-55-3		7.94E-09	1.51E-07											1.59E-08			1.93E-08
POM/Benzo(a)pyrene	50-32-8		5.29E-09	1.01E-07											1.06E-08			1.28E-08
POM/Benzo(b)fluoranthene	205-99-2		5.29E-09	1.01E-07											1.06E-08			1.28E-08
POM/Benzo(g,h,i)perylene	191-24-2		5.29E-09	1.01E-07											1.06E-08			1.28E-08
POM/Benzo(k)fluoranthene	205-82-3		7.94E-09	1.51E-07											1.59E-08			1.93E-08
POM/Chrysene	218-01-9		7.94E-09	1.51E-07											1.59E-08			1.93E-08
POM/Dibenzo(a,h)anthracene	53-70-3		5.29E-09	1.01E-07											1.06E-08			1.28E-08
Dichlorobenzene	25321-22-6		5.29E-06	1.01E-04											1.06E-05			1.28E-05
POM/Fluoranthene	206-44-0		1.32E-08	2.51E-07											2.65E-08			3.21E-08
POM/Fluorene	86-73-7		1.24E-08	2.35E-07											2.47E-08			3.00E-08
POM/Indeno(1,2,3-cd)pyrene	193-39-5		7.94E-09	1.51E-07											1.59E-08			1.93E-08
POM/Phenanathrene	85-01-8		7.50E-08	1.43E-06											1.50E-07			1.82E-07
POM/Pyrene	129-00-0		2.21E-08	4.19E-07											4.41E-08			5.35E-08
o-Cresol	95-48-7				4.22E-04			9.66E-02			8.96E-01							
Styrene	100-42-5				5.30E-03			5.29E-02			3.08E-01							
Acetophenone	98-86-2							5.06E-02			5.07E-02							
Dibenzofurans	132-64-9							3.45E-03			2.14E-02							
Nitrobenzene	98-95-3							1.29E-03										
Diethylene Glycol	111-46-6																0.001	
Hydrotreated light silicon	64742-47-8																0.125	
Isopropyl Alcohol	67-63-0																2.400	
High Molecular Wt. Silicon	63148-62-9																0.075	
Total POMs			3.86E-07	7.34E-06											7.73E-07			9.38E-07
Total PAHs																		
Total HAPs		**0.045**	**0.008**	**0.158**	**0.491**			**7.006**			**13.799**			**1.500**	**0.017**	**0.075**	**0.003**	**0.020**

Form AI-S-003(6) Supplement
Potential to Emit
HAPs Emissions Summary
East Jordan Foundry, LLC

Hazardous Air Pollutant Emissions Summ

Pollutant	MUA-1 (tpy)	MUA-2 (tpy)	MUA-3 (tpy)	MUA-4 (tpy)	MUA-5 (tpy)	MUA-6 (tpy)	MUA-7 (tpy)	MUA-8 (tpy)	MUA-9 (tpy)	MUA-10 (tpy)	MUA-11 (tpy)	Various NG Sources (tpy)	EG-1 (tpy)	EG-2 (tpy)	TOTAL HAPs/TACs (tpy)
Antimony (Sb)															**6.40E-05**
Arsenic (As)	2.86E-06	2.86E-06	2.86E-06	2.86E-06	2.86E-06	2.86E-06	2.86E-06	2.86E-06	2.86E-06	2.15E-06	2.15E-06	2.74E-06			**6.89E-05**
Beryllium (Be)	1.72E-07	1.72E-07	1.72E-07	1.72E-07	1.72E-07	1.72E-07	1.72E-07	1.72E-07	1.72E-07	1.29E-07	1.29E-07	1.64E-07			**3.26E-06**
Cadmium (Cd)	1.58E-05	1.58E-05	1.58E-05	1.58E-05	1.58E-05	1.58E-05	1.58E-05	1.58E-05	1.58E-05	1.18E-05	1.18E-05	1.51E-05			**3.92E-04**
Chromium (Cr)	2.00E-05	2.00E-05	2.00E-05	2.00E-05	2.00E-05	2.00E-05	2.00E-05	2.00E-05	2.00E-05	1.50E-05	1.50E-05	1.92E-05			**1.26E-02**
Cobalt (Co)	1.20E-06	1.20E-06	1.20E-06	1.20E-06	1.20E-06	1.20E-06	1.20E-06	1.20E-06	1.20E-06	9.02E-07	9.02E-07	1.15E-06			**7.46E-03**
Lead (Pb)	7.16E-06	7.16E-06	7.16E-06	7.16E-06	7.16E-06	7.16E-06	7.16E-06	7.16E-06	7.16E-06	5.37E-06	5.37E-06	6.85E-06			**4.91E-03**
Manganese (Mn)	5.44E-06	5.44E-06	5.44E-06	5.44E-06	5.44E-06	5.44E-06	5.44E-06	5.44E-06	5.44E-06	4.08E-06	4.08E-06	5.20E-06			**3.15E-02**
Mercury (Hg)	3.72E-06	3.72E-06	3.72E-06	3.72E-06	3.72E-06	3.72E-06	3.72E-06	3.72E-06	3.72E-06	2.79E-06	2.79E-06	3.56E-06			**7.07E-05**
Nickel (Ni)	3.01E-05	3.01E-05	3.01E-05	3.01E-05	3.01E-05	3.01E-05	3.01E-05	3.01E-05	3.01E-05	2.26E-05	2.26E-05	2.88E-05			**6.65E-03**
Selenium (Se)	3.44E-07	3.44E-07	3.44E-07	3.44E-07	3.44E-07	3.44E-07	3.44E-07	3.44E-07	3.44E-07	2.58E-07	2.58E-07	3.29E-07			**6.52E-06**
1,2,4 Trimethylbenzene															
1,3-Butadiene													1.60E-04	1.60E-04	**3.20E-04**
Acetaldehyde													6.72E-04	6.72E-04	**4.00E+00**
Acrolein													6.34E-04	6.34E-04	**1.27E-03**
Dimethylnaphthalenes															
Cresol															
Methylnaphthalenes															
Propionaldehyde															**3.68E-01**
Methylene diphenyl diisocyanate (MDI)															
4,4-methylenedianiline (MBA)															
Formaldehyde	1.07E-03	1.07E-03	1.07E-03	1.07E-03	1.07E-03	1.07E-03	1.07E-03	1.07E-03	1.07E-03	8.05E-04	8.05E-04	1.03E-03	4.94E-03	4.94E-03	**2.16E+00**
Cumene															**3.98E-02**
Benzene	3.01E-05	3.01E-05	3.01E-05	3.01E-05	3.01E-05	3.01E-05	3.01E-05	3.01E-05	3.01E-05	2.26E-05	2.26E-05	2.88E-05	3.81E-04	3.81E-04	**4.84E+00**
O-Xylene															**6.73E-01**
M-Xylene															**1.45E+00**
Methanol													7.37E-04	7.37E-04	**2.72E-03**
Methyl Chloride													9.93E-06	9.93E-06	**1.99E-05**
Phenol															**3.57E+00**
Naphthalene	8.73E-06	8.73E-06	8.73E-06	8.73E-06	8.73E-06	8.73E-06	8.73E-06	8.73E-06	8.73E-06	6.55E-06	6.55E-06	8.35E-06	2.34E-05	2.34E-05	**8.45E-01**
Ethyl Benzene															**3.45E-01**
Hydrogen Flouride															
Toluene	4.87E-05	4.87E-05	4.87E-05	4.87E-05	4.87E-05	4.87E-05	4.87E-05	4.87E-05	4.87E-05	3.65E-05	3.65E-05	4.66E-05	1.34E-04	1.34E-04	**3.07E+00**
P-Xylene															
Hexane	2.58E-02	2.58E-02	2.58E-02	2.58E-02	2.58E-02	2.58E-02	2.58E-02	2.58E-02	2.58E-02	1.93E-02	1.93E-02	2.46E-02			**4.89E-01**
Xylenes													4.70E-05	4.70E-05	**2.12E+00**
POM/2-Methylnaphthalene	3.44E-07	3.44E-07	3.44E-07	3.44E-07	3.44E-07	3.44E-07	3.44E-07	3.44E-07	3.44E-07	2.58E-07	2.58E-07	3.29E-07			**6.52E-06**
POM/3-Methylchloranthrene	2.58E-08	2.58E-08	2.58E-08	2.58E-08	2.58E-08	2.58E-08	2.58E-08	2.58E-08	2.58E-08	1.93E-08	1.93E-08	2.46E-08			**4.89E-07**
POM/7,12-Dimethylbenz(a)anthracene	2.29E-07	2.29E-07	2.29E-07	2.29E-07	2.29E-07	2.29E-07	2.29E-07	2.29E-07	2.29E-07	1.72E-07	1.72E-07	2.19E-07			**4.35E-06**
POM/Acenaphthene	2.58E-08	2.58E-08	2.58E-08	2.58E-08	2.58E-08	2.58E-08	2.58E-08	2.58E-08	2.58E-08	1.93E-08	1.93E-08	2.46E-08			**4.89E-07**
POM/Acenaphthylene	2.58E-08	2.58E-08	2.58E-08	2.58E-08	2.58E-08	2.58E-08	2.58E-08	2.58E-08	2.58E-08	1.93E-08	1.93E-08	2.46E-08			**4.89E-07**
POM/Anthracene	3.44E-08	3.44E-08	3.44E-08	3.44E-08	3.44E-08	3.44E-08	3.44E-08	3.44E-08	3.44E-08	2.58E-08	2.58E-08	3.29E-08			**6.52E-07**
POM/Benz(a)anthracene	2.58E-08	2.58E-08	2.58E-08	2.58E-08	2.58E-08	2.58E-08	2.58E-08	2.58E-08	2.58E-08	1.93E-08	1.93E-08	2.46E-08			**4.89E-07**
POM/Benzo(a)pyrene	1.72E-08	1.72E-08	1.72E-08	1.72E-08	1.72E-08	1.72E-08	1.72E-08	1.72E-08	1.72E-08	1.29E-08	1.29E-08	1.64E-08			**3.26E-07**
POM/Benzo(b)fluoranthene	1.72E-08	1.72E-08	1.72E-08	1.72E-08	1.72E-08	1.72E-08	1.72E-08	1.72E-08	1.72E-08	1.29E-08	1.29E-08	1.64E-08			**3.26E-07**
POM/Benzo(g,h,i)perylene	1.72E-08	1.72E-08	1.72E-08	1.72E-08	1.72E-08	1.72E-08	1.72E-08	1.72E-08	1.72E-08	1.29E-08	1.29E-08	1.64E-08			**3.26E-07**
POM/Benzo(k)fluoranthene	2.58E-08	2.58E-08	2.58E-08	2.58E-08	2.58E-08	2.58E-08	2.58E-08	2.58E-08	2.58E-08	1.93E-08	1.93E-08	2.46E-08			**4.89E-07**
POM/Chrysene	2.58E-08	2.58E-08	2.58E-08	2.58E-08	2.58E-08	2.58E-08	2.58E-08	2.58E-08	2.58E-08	1.93E-08	1.93E-08	2.46E-08			**4.89E-07**
POM/Dibenzo(a,h)anthracene	1.72E-08	1.72E-08	1.72E-08	1.72E-08	1.72E-08	1.72E-08	1.72E-08	1.72E-08	1.72E-08	1.29E-08	1.29E-08	1.64E-08			**3.26E-07**
Dichlorobenzene	1.72E-05	1.72E-05	1.72E-05	1.72E-05	1.72E-05	1.72E-05	1.72E-05	1.72E-05	1.72E-05	1.29E-05	1.29E-05	1.64E-05			**3.26E-04**
POM/Fluoranthene	4.30E-08	4.30E-08	4.30E-08	4.30E-08	4.30E-08	4.30E-08	4.30E-08	4.30E-08	4.30E-08	3.22E-08	3.22E-08	4.11E-08			**8.15E-07**
POM/Fluorene	4.01E-08	4.01E-08	4.01E-08	4.01E-08	4.01E-08	4.01E-08	4.01E-08	4.01E-08	4.01E-08	3.01E-08	3.01E-08	3.83E-08			**7.61E-07**
POM/Indeno(1,2,3-cd)pyrene	2.58E-08	2.58E-08	2.58E-08	2.58E-08	2.58E-08	2.58E-08	2.58E-08	2.58E-08	2.58E-08	1.93E-08	1.93E-08	2.46E-08			**4.89E-07**
POM/Phenanathrene	2.43E-07	2.43E-07	2.43E-07	2.43E-07	2.43E-07	2.43E-07	2.43E-07	2.43E-07	2.43E-07	1.83E-07	1.83E-07	2.33E-07			**4.62E-06**
POM/Pyrene	7.16E-08	7.16E-08	7.16E-08	7.16E-08	7.16E-08	7.16E-08	7.16E-08	7.16E-08	7.16E-08	5.37E-08	5.37E-08	6.85E-08			**1.36E-06**
o-Cresol															**9.93E-01**
Styrene													2.87E-06	2.87E-06	**3.66E-01**
Acetophenone															**1.01E-01**
Dibenzofurans															**2.48E-02**
Nitrobenzene															**1.29E-03**
Diethylene Glycol															**1.25E-03**
Hydrotreated light silicon															
Isopropyl Alcohol															
High Molecular Wt. Silicon															
Total POMs	1.25E-06	1.25E-06	1.25E-06	1.25E-06	1.25E-06	1.25E-06	1.25E-06	1.25E-06	1.25E-06	9.41E-07	9.41E-07	1.20E-06			**2.38E-05**
Total PAHs													3.40E-05		**3.40E-05**
Total HAPs	**0.027**	**0.027**	**0.027**	**0.027**	**0.027**	**0.027**	**0.027**	**0.027**	**0.027**	**0.020**	**0.020**	**0.026**	**0.008**	**0.008**	**23.448**

Form AI-S003(6) Supplement
Potential to Emit
Emissions Calculations
East Jordan Foundry, LLC

Maximum Yearly Capacity
128,000 Tons/Year

Flow Diagram Designation
Charge Handling

Maximum Hourly Capacity
28.00 Tons/Hour

Process Description:
East Jordan Foundry, LLC
Charge Handling
Control Device: Baghouses A/B, E, H/J, K
SCC Code:
Control Device Outlet: gr/dscf
Airflow: acfm
Stack Gas Temperature: 100 °F

The sprue return conveyors (1530) and alloy delivery system are included in the charge handling system.

Facility Process Name:	Criteria Pollutants								
Charge Handling									
Emission Factor Basis:	PM	PM10	PM2.5	SOx	NOx	VOC	CO	Lead	CO_2e
Emission Factors:	0.07	0.07	0.06						
(source)	Note 1	Note 1	Note 3						
Capture Efficiencies:	90.00	90.00	90.00						
Maximum Stack Emission Rate:									
Hourly (lb/hr)	See Controlling BH(s) for Stk Emissions								
Annual (TPY)	See Controlling BH(s) for Stk Emissions								
Maximum Fugitive Emission Rate:									
Hourly (lb/hr)	0.196	0.196	0.168						
Annual (TPY)	0.448	0.448	0.384						
Total Emission Rate:									
Hourly (lb/hr)	0.196	0.196	0.168						
Annual (TPY)	0.448	0.448	0.384						

PROPOSED OPERATING SCHEDULE
24 HRS/DAY
6,000 HRS/YEAR

Note 1: Gutow Article, Modern Casting; January 1972; PM emissions from Raw material handling (0.04 lbs/ton) and charge makeup (0.03 lbs/ton) released to the atmosphere. All PM emission were conservatively assumed to be PM-10 emissions.
Note 2: The Gutow article was supplement with an Ohio EPA RACM document to account for the ventilation at the sprue conveyor and inoculant addition system. Ohio EPA RACM guide indicates that the emissions generated from incoming scrap are of particle size 30 -1000 microns. Therefore the only source of emissions of PM/PM10 from raw material handling is from handling of foundry returns. Sprue return ventilation system would capture 80% of the emissions generated from foundry returns.
Note 3: Emission factor based on USEPA PM Calculator (March 2012) PM to PM2.5 ratio and uncontrolled PM emission factor.

EXAMPLE CALCULATIONS:
Maximum Emission Rate (lb/hr) {building exhausts} = (Emission Factor lb/ton) x (Maximum Hourly Rate tph) x (% returns/100 for PM10 only) x (1- %fugitive rate/100)
Maximum Emission Rate (lb/hr) {fugitive} = (Emission Factor lb/ton) x (Maximum Hourly Rate tph) x (%returns for PM10 only) x (% fugitive emissions rate/100)
Annual (TPY) Emission Rates = (lb/hr emission rate) x (Maximum Annual Melt Rate) / (Maximum Hourly Melt Rate) / (2000 lbs/ton)

Form AI-S003(6) Supplement
Potential to Emit
Emissions Calculations
East Jordan Foundry, LLC

Maximum Yearly Capacity
128.000 Tons/Year

Flow Diagram Designation
EIF Melting

Maximum Hourly Capacity
28.00 Tons/Hour

Process Description:
East Jordan Foundry, LLC
EIF Melting
Control Device: Baghouses A/B
SCC Code:
Control Device Outlet: 0.0020 gr/dscf
Airflow: 57,000 acfm
Stack Gas Temperature: 100 °F

Facility Process Name:	Criteria Pollutants								
EIF Melting									
Emission Factor Basis:	**PM**	**PM10**	**PM2.5**	**SOx**	**NOx**	**VOC**	**CO**	**Lead**	**CO_2e**
Emission Factors: Button	0.90	0.86	0.85			0.03	0.33		34.32
(source)	Note 1	Note 1	Note 6			Note 1	Note 4	Note 1	Note 5
Capture Efficiency	99.00	99.00	99.00			99.00	99.00		99.00
Control Efficiency									
Building Capt. Eff									
Maximum Stack Emission Rate:									
Hourly (lb/hr)	See Controlling PM(s) for Stk Emissions					0.832	9.148		674.069
Annual (TPY)	See Controlling PM(s) for Stk Emissions					**1.901**	**20.909**		**1540.728**
Maximum Fugitive Emission Rate:									
Hourly (lb/hr)	0.252	0.241	0.232			0.008	0.092		6.809
Annual (TPY)	**0.576**	**0.550**	**0.541**			**0.019**	**0.211**		**15.563**
Total Emission Rate:									
Hourly (lb/hr)	0.252	0.241	0.232			0.840	9.240		680.877
Annual (TPY)	**0.576**	**0.550**	**0.541**			**1.920**	**21.120**		**1556.291**

PROPOSED OPERATING SCHEDULE
24 HRS/DAY
6,000 HRS/YEAR

Note 1 Emission factor from FIRE 6.25 SCC 3-04-003-03
Note 2 From Stack testing at Wheland Foundry in Tennessee
Note 3 See below HAPs calculations
Note 4 EJW Foundry Stack Testing (Oct 2010) - Results used with Wheland and Technikon information to distribute between melting, pouring, cooling and shakeout
Note 5 EJW Stack Testing (July 2010) - Average rate calculated between MS-01 & MS-02. Methane and Nitrous Oxide emissions are not known. Background concentration of CO2 was not considered.
Note 6 Emission factor based on USEPA PM Calculator (March 2012) PM to PM2.5 ratio and uncontrolled PM emission factor

EXAMPLE CALCULATIONS:
Maximum Stack Emission Rate (lb/hr) (PM & PM-10)=(gr/acfm) x (acfm) x (1 lb / 7000 grains) x (60 min / 1 hr)
Maximum Stack Emission Rate (lb/hr) (Lead)=(gr/acfm) x (acfm) x (1 lb / 7000 grains) x (60 min / 1 hr)*(Lead EF/PM EF)
Maximum Annual (Ton/yr) Stack Emission Rates = (lb/hr emission rate) x (hours of operation per year at max. rate) x (ton/2000 lbs)
Maximum Fugitive Emission Rate (lb/hr) = ((1 - Capture Efficiency/100) x (Emission Factor) x (Melt ton/hr) x (1-(Settling Factor)/100)
Maximum Annual Fugitive Emissions (ton/yr)= (Hourly fugitive emissions (lb/hr)/ hourly Process rate (ton/hr)) x (Annual process rate (tons/yr) x (ton/2000 lbs)
Total Emission Rate (lb/hr) = (Maximum Stack Emission Rate lb/hr) + (Maximum Fugitive Emission Rate lb/hr)
Total Emission Rates Annual (TPY)= (annual stack emissions (ton/yr)) + (annual fugitive emissions (ton/yr))

East Jordan Foundry, LLC
HAP Emission Calculations
EIF Melting

HAPs	CAS #	Note 10 Emission Factor %wt PM	Emissions lbs/hr	Emissions tons/yr	
Antimony (Sb)	7440-36-0				
Arsenic (As)	7440-38-2				
Beryllium (Be)	7440-41-7				
Cadmium (Cd)	7440-43-9				
Chromium (Cr)	7440-47-3	0.30	0.0039	**0.0110**	Note 8
Cobalt (Co)	7440-48-4				
Lead (Pb)	7439-92-1	0.13	0.0017	**0.0048**	Note 9
Manganese (Mn)	7439-96-5	0.70	0.0090	**0.0257**	Note 8
Mercury (Hg)	7439-97-6				
Nickel (Ni)	7440-02-0	0.10	0.0013	**0.0037**	Note 8
Selenium (Se)	7782-49-2				
Acetaldehyde	75-07-0				
Dimethylnaphthalenes	28804-88-8				
Cresol	1319-77-3				
Methylnaphthalenes	90-12-0				
Propionaldehyde	123-38-6				
Methylene diphenyl diisocyanate (MDI)	101-68-8				
4,4-methylenedianiline (MBA)	101-77-9				
Formaldehyde	50-00-0				
Cumene	98-82-8				
Benzene	71-43-2				
O-Xylene	95-47-6				
M-Xylene	108-38-3				
Phenol	108-95-2				
Naphthalene	91-20-3				
Ethyl Benzene	100-41-4				
Hydrogen Flouride	7664-39-3				
Toluene	108-88-3				
P-Xylene	106-42-3				
Hexane	110-54-3				
Xylenes	1330-20-7				
p-Cresol	95-48-7				
Styrene	100-42-5				
Acetophenone	98-86-2				
Dibenzofurans	132-64-9				
Nitrobenzene	98-95-3				
Total HAPs			**1.58E-02**	**4.52E-02**	

Note 8 Emission factors are taken from design range of Gray & Ductile Iron. Emissions were estimated using the highest end of the concentration range of either metal type
Note 9 Emission factor developed using the average compositional lead content of baghouse dust
Note 10 %wt of PM EF multiplied fugitive and stack emissions. Stack emissions derived from air volume allocated to EIFs and gr loading of BH

Form AI-S003(6) Supplement
Potential to Emit
Emissions Calculations
East Jordan Foundry, LLC

Maximum Yearly Capacity
128,000 Tons/Year

Flow Diagram Designation
Ductile Inoculation

Maximum Hourly Capacity
28.00 Tons/Hour

Process Description:
East Jordan Foundry, LLC
Ductile Inoculation
Control Device: Baghouses A/B
SCC Code:
Control Device Outlet: gr/dscf
Airflow: acfm
Stack Gas Temperature: °F

Facility Process Name:		Criteria Pollutants								
Ductile Inoculation										
Emission Factor Basis:		PM	PM10	PM2.5	SOx	NOx	VOC	CO	Lead	CO_2e
Emission Factors:	lb/ton	3.00	3.00	1.89			0.005			
(source)		Note 2	Note 2	Note 3			Note 1			
Capture Efficiency		99.00	99.00	99.00			99.00			
Note 4 Process Design Reduction Eff.		98.00	98.00	98.00						
Building Capt. Eff										
Maximum Stack Emission Rate:										
Hourly (lb/hr)		See Controlling BH(s) for Stk Emissions					0.139			
Annual (TPY)		See Controlling BH(s) for Stk Emissions					**0.317**			
Maximum Fugitive Emission Rate:										
Hourly (lb/hr)		0.017	0.017	0.011			0.140			
Annual (TPY)		**0.038**	**0.038**	**0.024**			**0.320**			
Total Emission Rate:										
Hourly (lb/hr)		0.017	0.017	0.011			0.279			
Annual (TPY)		**0.038**	**0.038**	**0.024**			**0.637**			

PROPOSED OPERATING SCHEDULE
24 HRS/DAY
6,000 HRS/YEAR

Note 1: Emission factor from FIRE 6.25 SCC 3-04-003-10
Note 2: Emission factor from FIRE 6.25 SCC 3-04-003-22
Note 3: Emission factor based on USEPA PM Calculator (March 2012) PM to PM2.5 ratio and uncontrolled PM emission factor.
Note 4: The inoculation ladle and method of inoculation "Tundish Ladle" that has been chosen is designed to minimize emissions to the atmosphere from this process. The manufacturer advertises a reduction in emissions of 98%.

EXAMPLE CALCULATIONS:
Maximum Fugitive Emission Rate (lb/hr) = (Emission Factor) x (process weight rate (ton/hr)) x (1-(Settling Factor)/100)
Annual (TPY) Emission Rates = (lb/hr emission rate) x (1/ Maximum Hourly Process Rate (tons/hr)) x (Annual process weight rate (tons/yr))x (ton/2000)

Form AI-S003(6) Supplement
Potential to Emit
Emissions Calculations
East Jordan Foundry, LLC

Maximum Yearly Capacity
128,000 Tons/Year

Flow Diagram Designation
Hot Metal Transfer

Maximum Hourly Capacity
28.00 Tons/Hour

Process Description:
East Jordan Foundry, LLC
Hot Metal Transfer
Control Device: Baghouses A/B
SCC Code:
Control Device Outlet: gr/dscf
Airflow: acfm
Stack Gas Temperature: °F

Facility Process Name:	**Criteria Pollutants**								
Hot Metal Transfer									
Emission Factor Basis:	**PM**	**PM10**	**PM2.5**	**SOx**	**NOx**	**VOC**	**CO**	**Lead**	**CO_2e**
Emission Factors:	0.056	0.052	0.046						
(source)	Note 1	Note 2	Note 3						
Capture Efficiency	99.00	99.00	99.00						
Control Efficiency	99.00	99.00	99.00						
Building Capt. Eff									
Maximum Stack Emission Rate:									
Hourly (lb/hr)	See Controlling BH(s) for Stk Emissions								
Annual (TPY)	See Controlling BH(s) for Stk Emissions								
Maximum Fugitive Emission Rate:									
Hourly (lb/hr)	0.016	0.014	0.013						
Annual (TPY)	**0.036**	**0.033**	**0.029**						
Total Emission Rate:									
Hourly (lb/hr)	0.016	0.014	0.013						
Annual (TPY)	**0.036**	**0.033**	**0.029**						

PROPOSED OPERATING SCHEDULE
24 HRS/DAY
6,000 HRS/YEAR

Note 1: Hot metal transfer at building monitor. AP-42, Ch. 12-5, Table 12.5-1
Note 2: Emission factor based on USEPA PM Calculator PM/PM10/PM2.5 ratio and uncontrolled PM emission factor for SCC 30400320

EXAMPLE CALCULATIONS:
Maximum Stack Emission Rate (lb/hr) {PM,PM-10} =(gr/acfm) x (acfm) x (1 lb / 7000 grains) x (60 min / 1 hr)
Maximum Annual (Ton/yr) stack Emission Rates = (lb/hr emission rate) x (hours of operation per year at max. rate) x (ton/2000 lbs)
Maximum Fugitive Emission Rate (lb/hr) = ((1 - Capture Efficiency/100) x (Emission Factor) x (Melt ton/hr) x (1-(Settling Factor)/100)
Maximum Annual Fugitive Emissions (ton/yr)= (Hourly fugitive emissions (lb/hr)/ hourly Process rate (ton/hr) x (Annual process rate (tons/yr) x (ton/2000 lbs)
Total Emission Rate (lb/hr) = (Maximum Stack Emission Rate lb/hr) + (Maximum Fugitive Emission Rate lb/hr)
Total Emission Rates Annual (TPY)= (annual stack emissions (ton/yr)) + (annual fugitive emissions (ton/yr))

Form AI-S003(6) Supplement
Potential to Emit
Emissions Calculations
East Jordan Foundry, LLC

Maximum Yearly Capacity
128,000 Tons/Year

Flow Diagram Designation
Ladle Repair

Maximum Hourly Capacity
28.00 Tons/Hour

Process Description:
East Jordan Foundry, LLC
Ladle Repair
Control Device: Baghouse K
SCC Code:
Control Device Outlet: gr/dscf
Airflow: acfm
Stack Gas Temperature: 100 °F

Facility Process Name:	Criteria Pollutants								
Ladle Repair									
Emission Factor Basis:	**PM**	**PM10**	**PM2.5**	**SOx**	**NOx**	**VOC**	**CO**	**Lead**	**CO_2e**
Emission Factors: lb/ton									
(source)									
Capture Efficiency	100.00	100.00	100.00						
Control Efficiency									
Building Capt. Eff	70.00	70.00	70.00						
Maximum Stack Emission Rate:									
Hourly (lb/hr)	See Controlling BH(s) for Stk Emissions								
Annual (TPY)	See Controlling BH(s) for Stk Emissions								
Maximum Fugitive Emission Rate:									
Hourly (lb/hr)									
Annual (TPY)									
Total Emission Rate:									
Hourly (lb/hr)									
Annual (TPY)									

PROPOSED OPERATING SCHEDULE
22 HRS/DAY
6,000 HRS/YEAR

EXAMPLE CALCULATIONS:
Maximum Stack Emission Rate (lb/hr) {PM,PM-10} =(gr/acfm) x (acfm) x (1 lb / 7000 grains) x (60 min / 1 hr)
Maximum Annual (Ton/yr) stack Emission Rates = (lb/hr emission rate) x (hours of operation per year at max. rate) x (ton/2000 lbs)

Form AI-S003(6) Supplement
Potential to Emit
Emissions Calculations
East Jordan Foundry, LLC

Flow Diagram Designation
In-Duct Burners

Process Description:
In-Duct Burners
Control Device:

Natural Gas Combustion

Inputs	
1.5	= Max. Hourly Heat Input Rate (MMBtu/hr)
1020	= MMBtu/MMscf
1470.6	= Max. Hourly Fuel Usage Rate (standard cubic feet hour)
6000	= Maximum Operation (hours/year)
8.823529412	= Maximum Annual Fuel Usage (MMscf)

POLLUTANT	CAS #	Note 1 Emission Factor ($lb/10^6$ scf)	Maximum Emissions (lbs/hr)	(tpy)
PM/PM10/PM2.5	n/a	7.6	See BH Emissions for each Stk	
NOx	n/a	100.0	0.15	0.44
CO	n/a	84.0	0.12	0.37
Lead	n/a	0.0005	7.35E-07	2.21E-06
SO2	n/a	0.6	0.001	0.003
VOC	n/a	5.5	0.01	0.02
CO_2e	n/a	120,000	176.47	529.41
Arsenic (As)	7440-38-2	2.00E-04	2.94E-07	8.82E-07
Beryllium (Be)	7440-41-7	1.20E-05	1.76E-08	5.29E-08
Cadmium (Cd)	7440-43-9	1.10E-03	1.62E-06	4.85E-06
Chromium (Cr)	7440-47-3	1.40E-03	2.06E-06	6.18E-06
Cobalt (Co)	7440-48-4	8.40E-05	1.24E-07	3.71E-07
Manganese (Mn)	7439-96-5	3.80E-04	5.59E-07	1.68E-06
Mercury (Hg)	7439-97-6	2.60E-04	3.82E-07	1.15E-06
Nickel (Ni)	7440-02-0	2.10E-03	3.09E-06	9.26E-06
Selenium (Se)	7782-49-2	2.40E-05	3.53E-08	1.06E-07
POM/2-Methylnaphthalene	91-57-6	2.40E-05	3.53E-08	1.06E-07
POM/3-Methylchloranthrene	56-49-5	1.80E-06	2.65E-09	7.94E-09
POM/7,12-Dimethylbenz(a)anthracene	57-97-6	1.60E-05	2.35E-08	7.06E-08
POM/Acenaphthene	83-32-9	1.80E-06	2.65E-09	7.94E-09
POM/Acenaphthylene	203-96-8	1.80E-06	2.65E-09	7.94E-09
POM/Anthracene	120-12-7	2.40E-06	3.53E-09	1.06E-08
POM/Benz(a)anthracene	56-55-3	1.80E-06	2.65E-09	7.94E-09
Benzene	71-43-2	2.10E-03	3.09E-06	9.26E-06
POM/Benzo(a)pyrene	50-32-8	1.20E-06	1.76E-09	5.29E-09
POM/Benzo(b)fluoranthene	205-99-2	1.20E-06	1.76E-09	5.29E-09
POM/Benzo(g,h,i)perylene	191-24-2	1.20E-06	1.76E-09	5.29E-09
POM/Benzo(k)fluoranthene	205-82-3	1.80E-06	2.65E-09	7.94E-09
POM/Chrysene	218-01-9	1.80E-06	2.65E-09	7.94E-09
POM/Dibenzo(a,h)anthracene	53-70-3	1.20E-06	1.76E-09	5.29E-09
Dichlorobenzene	25321-22-6	1.20E-03	1.76E-06	5.29E-06
POM/Fluoranthene	206-44-0	3.00E-06	4.41E-09	1.32E-08
POM/Fluorene	86-73-7	2.80E-06	4.12E-09	1.24E-08
Formaldehyde	50-00-0	7.50E-02	1.10E-04	3.31E-04
Hexane	110-54-3	1.80E+00	2.65E-03	7.94E-03
POM/Indeno(1,2,3-cd)pyrene	193-39-5	1.80E-06	2.65E-09	7.94E-09
Naphthalene	91-20-3	6.10E-04	8.97E-07	2.69E-06
POM/Phenanathrene	85-01-8	1.70E-05	2.50E-08	7.50E-08
POM/Pyrene	129-00-0	5.00E-06	7.35E-09	2.21E-08
Toluene	108-88-3	3.40E-03	5.00E-06	1.50E-05
Total POM			1.29E-07	3.86E-07
Total HAPs			2.78E-03	8.33E-03

Note 1: FROM AP-42 Fifth Edition, Supplement D, TABLE 1.4-2&3&4. 7/98 External Combustion Sources 1.4-9. Many emission factors < than specific value. In this case, specific value used to error on conservative side

EXAMPLE CALCULATIONS:
Maximum Hourly Emission = Max.hourly Fuel Usage rate (standard cubic feet hour) x (Pollutant E.F.)
Maximum Yearly Emission = Max.Hourly Emission Rate (lb/hr) x (Maximum Hours of Operation)

Form AI-S003(6) Supplement
Potential to Emit
Emissions Calculations
East Jordan Foundry, LLC

Flow Diagram Designation
Ladle Heaters

Process Description:
Ladle Heaters
Control Device:

Natural Gas Combustion

Inputs

28.5	= Max. Hourly Heat Input Rate (MMBtu/hr)
1020	= MMBtu/MMscf
27941.2	= Max. Hourly Fuel Usage Rate (standard cubic feet hour)
6000	= Maximum Operation (hours/year)
167.6470588	= Maximum Annual Fuel Usage (MMscf)

POLLUTANT	CAS #	Note 1 Emission Factor (lb/10^6 scf)	Maximum Emissions (lbs/hr)	(tpy)
PM/PM10/PM2.5	n/a	7.6	0.21	0.64
NOx	n/a	100.0	2.79	8.38
CO	n/a	84.0	2.35	7.04
Lead	n/a	0.0005	1.40E-05	4.19E-05
SO2	n/a	0.6	0.017	0.050
VOC	n/a	5.5	0.15	0.46
CO_2e	n/a	120,000	3352.94	10058.82
Arsenic (As)	7440-38-2	2.00E-04	5.59E-06	1.68E-05
Beryllium (Be)	7440-41-7	1.20E-05	3.35E-07	1.01E-06
Cadmium (Cd)	7440-43-9	1.10E-03	3.07E-05	9.22E-05
Chromium (Cr)	7440-47-3	1.40E-03	3.91E-05	1.17E-04
Cobalt (Co)	7440-48-4	8.40E-05	2.35E-06	7.04E-06
Manganese (Mn)	7439-96-5	3.80E-04	1.06E-05	3.19E-05
Mercury (Hg)	7439-97-6	2.60E-04	7.26E-06	2.18E-05
Nickel (Ni)	7440-02-0	2.10E-03	5.87E-05	1.76E-04
Selenium (Se)	7782-49-2	2.40E-05	6.71E-07	2.01E-06
POM/2-Methylnaphthalene	91-57-6	2.40E-05	6.71E-07	2.01E-06
POM/3-Methylchloranthrene	56-49-5	1.80E-06	5.03E-08	1.51E-07
POM/7,12-Dimethylbenz(a)anthracene	57-97-6	1.60E-05	4.47E-07	1.34E-06
POM/Acenaphthene	83-32-9	1.80E-06	5.03E-08	1.51E-07
POM/Acenaphthylene	203-96-8	1.80E-06	5.03E-08	1.51E-07
POM/Anthracene	120-12-7	2.40E-06	6.71E-08	2.01E-07
POM/Benz(a)anthracene	56-55-3	1.80E-06	5.03E-08	1.51E-07
Benzene	71-43-2	2.10E-03	5.87E-05	1.76E-04
POM/Benzo(a)pyrene	50-32-8	1.20E-06	3.35E-08	1.01E-07
POM/Benzo(b)fluoranthene	205-99-2	1.20E-06	3.35E-08	1.01E-07
POM/Benzo(g,h,i)perylene	191-24-2	1.20E-06	3.35E-08	1.01E-07
POM/Benzo(k)fluoranthene	205-82-3	1.80E-06	5.03E-08	1.51E-07
POM/Chrysene	218-01-9	1.80E-06	5.03E-08	1.51E-07
POM/Dibenzo(a,h)anthracene	53-70-3	1.20E-06	3.35E-08	1.01E-07
Dichlorobenzene	25321-22-6	1.20E-03	3.35E-05	1.01E-04
POM/Fluoranthene	206-44-0	3.00E-06	8.38E-08	2.51E-07
POM/Fluorene	86-73-7	2.80E-06	7.82E-08	2.35E-07
Formaldehyde	50-00-0	7.50E-02	2.10E-03	6.29E-03
Hexane	110-54-3	1.80E+00	5.03E-02	1.51E-01
POM/Indeno(1,2,3-cd)pyrene	193-39-5	1.80E-06	5.03E-08	1.51E-07
Naphthalene	91-20-3	6.10E-04	1.70E-05	5.11E-05
POM/Phenanathrene	85-01-8	1.70E-05	4.75E-07	1.43E-06
POM/Pyrene	129-00-0	5.00E-06	1.40E-07	4.19E-07
Toluene	108-88-3	3.40E-03	9.50E-05	2.85E-04
Total POM			2.45E-06	7.34E-06
Total HAPs			5.28E-02	1.58E-01

Note 1: FROM AP-42 Fifth Edition, Supplement D, TABLE 1.4-2&3&4. 7/98 External Combustion Sources 1.4-9. Many emission factors < than specific value. In this case, specific value used to error on conservative side

EXAMPLE CALCULATIONS:
Maximum Hourly Emission = Max.hourly Fuel Usage rate (standard cubic feet hour) x (Pollutant E.F.)
Maximum Yearly Emission = Max.Hourly Emission Rate (lb/hr) x (Maximum Hours of Operation)

Form AI-S003(6) Supplement
Potential to Emit
Emissions Calculations
East Jordan Foundry, LLC

Maximum Yearly Capacity
128,000 Tons/Year

Flow Diagram Designation
LML Pouring & Cooling

Maximum Hourly Capacity
28.00 Tons/Hour

Process Description:
East Jordan Foundry, LLC
LML Pouring & Cooling
Control Device: Baghouses A/B, D
SCC Code:
Control Device Outlet: 0.0020 gr/dscf gr/dscf
Airflow: 129,000 acfm acfm
Stack Gas Temperature: 100 °F

Facility Process Name:		Criteria Pollutants								
LML Pouring & Cooling										
Emission Factor Basis:		**PM**	**PM10**	**PM2.5**	**SOx**	**NOx**	**VOC**	**CO**	**Lead**	**CO_2e**
Emission Factors:	lb/ton	0.410	0.410	0.336	0.260	0.068	1.241	6.523	0.00048	24.654
(source)		Note 1	Note 1	Note 8	Note 2	Note 6	Note 5	Note 4	Note 3	Note 7
	Capture Efficiency	99.50	99.50	99.50	99.50	99.50	99.50	99.50	99.50	99.50
	Control Efficiency									
	Building Capt. Eff									
Maximum Stack Emission Rate:										
Hourly (lb/hr)		See Controlling BH(s) for Stk Emissions			7.244	1.907	34.574	181.742	2.45E-03	686.854
Annual (TPY)		See Controlling BH(s) for Stk Emissions			**16.557**	**4.360**	**79.027**	**415.410**	**3.67E-06**	**1569.951**
Maximum Fugitive Emission Rate:										
Hourly (lb/hr)		0.057	0.057	0.047	0.036	0.010	0.174	0.913	6.71E-05	3.452
Annual (TPY)		**0.131**	**0.131**	**0.108**	**0.083**	**0.022**	**0.397**	**2.087**	**1.53E-04**	**7.889**
Total Emission Rate:										
Hourly (lb/hr)		0.057	0.057	0.047	7.280	1.917	34.748	182.655	2.51E-03	690.305
Annual (TPY)		**0.131**	**0.131**	**0.108**	**16.640**	**4.381**	**79.424**	**417.497**	**1.57E-04**	**1577.840**

PROPOSED OPERATING SCHEDULE
24 HRS/DAY
6,000 HRS/YEAR

Note 1: Stack test at Quality Castings, Orrville, OH.
Note 2: 2019 Compliance Test plus 20% allowance for testing and measurement variability each.
Note 3: From Stack testing at Foundry in Mexico (CERP data)
Note 4: EJIW Foundry Stack Testing (Oct 2010). Results used with Wheland and Technikon information to distribute between melting, pouring, cooling and shakeout.
Note 5: EJIW Stack testing (March 2002) and Technikon #1410-117 FU
Note 6: EJIW Stack Testing (March 2002, July 2010)
Note 7: EJIW-Ardmore Foundry Stack Testing (July 2010). Average rate calculated between SS-01 & SS-03. Methane and Nitrous Oxide emissions are not known. Background concentration of CO_2 was not considered.
Note 8: Emission factor based on USEPA PM Calculator (March 2012) PM to PM2.5 ratio and uncontrolled PM emission factor.
Note 9: This shows maximum emissions from this line. Combined group limit on Pouring and Cooling of 28 tph, 128,000 tpy throughput due to max melt rate upstream.
Note 10: Compliance with gaseous criteria pollutants to be demonstrated by summing emissions across all applicable stacks.

EXAMPLE CALCULATIONS:
Maximum Stack Emission Rate (lb/hr) {PM,PM-10} =(gr/acfm) x (acfm) x (1 lb / 7000 grains) x (60 min / 1 hr)
Maximum Stack Emission Rate (lb/hr) {Lead} =(gr/acfm) x (acfm) x (1 lb / 7000 grains) x (60 min / 1 hr) x (EF for Lead/EF for PM-10)
Maximum Stack Emissions Rate (lb/hr) {SOx,NOx, VOC, CO} =(Max. Rated Capacity ton/hr) x (EF in lb/ton) x (Capture Eff./100)
Maximum Annual (Ton/yr) PM, PM10 and lead stack Emission Rates = (lb/hr emission rate) x (hours of operation per year at max. rate) x (ton/2000 lbs)
Maximum Annual (ton/yr) SOx NOx, VOC and CO stack emissions= (Hourly stack emissions (lb/hr)/ hourly Process rate (ton/hr) x (Annual process rate (tons/yr) x (ton/2000 lbs)
Maximum Fugitive Emission Rate (lb/hr) = ((1 - Capture Efficiency/100) x (Emission Factor) x (Melt ton/hr) x (1-(Settling Factor)/100)
Maximum Annual Fugitive Emissions (ton/yr)= (Hourly fugitive emissions (lb/hr)/ hourly Process rate (ton/hr) x (Annual process rate (tons/yr) x (ton/2000 lbs)
Total Emission Rate (lb/hr) = (Maximum Stack Emission Rate lb/hr) + (Maximum Fugitive Emission Rate lb/hr)
Total Emission Rates Annual (TPY)= (annual stack emissions (ton/yr)) + (annual fugitive emissions (ton/yr))

Form AI-S003(6) Supplement
Potential to Emit
Emissions Calculations
East Jordan Foundry, LLC

Maximum Yearly Capacity
128,000 Tons/Year

Flow Diagram Designation
1230 Pouring & Cooling

Maximum Hourly Capacity
28.00 Tons/Hour

Process Description:
East Jordan Foundry, LLC
1230 Pouring & Cooling
Control Device: Baghouses A/B, D
SCC Code:
Control Device Outlet: 0.0020 gr/dscf gr/dscf
Airflow: 129,000 acfm acfm
Stack Gas Temperature: 100 °F

Facility Process Name:			Criteria Pollutants								
	1230 Pouring & Cooling										
Emission Factor Basis:			PM	PM10	PM2.5	SOx	NOx	VOC	CO	Lead	CO_2e
Emission Factors:		lb/ton	0.410	0.410	0.336	0.260	0.068	1.241	6.523	0.00048	24.654
(source)			Note 1	Note 1	Note 8	Note 2	Note 6	Note 5	Note 4	Note 3	Note 7
		Capture Efficiency	99.50	99.50	99.50	99.50	99.50	99.50	99.50	99.50	99.50
		Control Efficiency									
		Building Capt. Eff									
Maximum Stack Emission Rate:											
	Hourly (lb/hr)		See Controlling BH(s) for Stk Emissions			7.244	1.907	34.574	181.742	2.45E-03	686.854
	Annual (TPY)		See Controlling BH(s) for Stk Emissions			**16.557**	**4.360**	**79.027**	**415.410**	**3.67E-06**	**1569.951**
Maximum Fugitive Emission Rate:											
	Hourly (lb/hr)		0.057	0.057	0.047	0.036	0.010	0.174	0.913	6.71E-05	3.452
	Annual (TPY)		**0.131**	**0.131**	**0.108**	**0.083**	**0.022**	**0.397**	**2.087**	**1.53E-04**	**7.889**
Total Emission Rate:											
	Hourly (lb/hr)		0.057	0.057	0.047	7.280	1.917	34.748	182.655	2.51E-03	690.305
	Annual (TPY)		**0.131**	**0.131**	**0.108**	**16.640**	**4.381**	**79.424**	**417.497**	**1.57E-04**	**1577.840**

PROPOSED OPERATING SCHEDULE
24 HRS/DAY
6,000 HRS/YEAR

Note 1: Stack test at Quality Castings, Orrville, OH.
Note 2: 2019 Compliance Test plus 20% allowance for testing and measurement variability each.
Note 3: From Stack testing at Foundry in Mexico (CERP data)
Note 4: EJIW Foundry Stack Testing (Oct 2010). Results used with Wheland and Technikon information to distribute between melting, pouring, cooling and shakeout.
Note 5: EJIW Stack testing (March 2002) and Technikon #1410-117 FU. Includes Mold Making emissions.
Note 6: EJIW Stack Testing (March 2002, July 2010)
Note 7: EJIW-Ardmore Foundry Stack Testing (July 2010). Average rate calculated between SS-01 & SS-03. Methane and Nitrous Oxide emissions are not known. Background concentration of CO_2 was not considered.
Note 8: Emission factor based on USEPA PM Calculator (March 2012) PM to PM2.5 ratio and uncontrolled PM emission factor.
Note 9: This shows maximum emissions from this line. Combined group limit on Pouring and Cooling of 28 tph, 128,000 tpy throughput due to max melt rate upstream.
Note 10: Compliance with gaseous criteria pollutants to be demonstrated by summing emissions across all applicable stacks.

EXAMPLE CALCULATIONS:
Maximum Stack Emission Rate (lb/hr) {PM,PM-10} =(gr/acfm) x (acfm) x (1 lb / 7000 grains) x (60 min / 1 hr)
Maximum Stack Emission Rate (lb/hr) {Lead} =(gr/acfm) x (acfm) x (1 lb / 7000 grains) x (60 min / 1 hr) x (EF for Lead/EF for PM-10)
Maximum Stack Emissions Rate (lb/hr) {SOx,NOx, VOC, CO} =(Max. Rated Capacity ton/hr) x (EF in lb/ton) x (Capture Eff./100)
Maximum Annual (Ton/yr) PM, PM10 and lead stack Emission Rates = (lb/hr emission rate) x (hours of operation per year at max. rate) x (ton/2000 lbs)
Maximum Annual (ton/yr) SOx NOx, VOC and CO stack emissions= (Hourly stack emissions (lb/hr)/ hourly Process rate (ton/hr) x (Annual process rate (tons/yr) x (ton/2000 lbs)
Maximum Fugitive Emission Rate (lb/hr) = ((1 - Capture Efficiency/100) x (Emission Factor) x (Melt ton/hr) x (1-(Settling Factor)/100)
Maximum Annual Fugitive Emissions (ton/yr)= (Hourly fugitive emissions (lb/hr)/ hourly Process rate (ton/hr) x (Annual process rate (tons/yr) x (ton/2000 lbs)
Total Emission Rate (lb/hr) = (Maximum Stack Emission Rate lb/hr) + (Maximum Fugitive Emission Rate lb/hr)
Total Emission Rates Annual (TPY)= (annual stack emissions (ton/yr)) + (annual fugitive emissions (ton/yr))

Form AI-S003(6) Supplement
Potential to Emit
Emissions Calculations
East Jordan Foundry, LLC

Maximum Yearly Capacity
128,000 Tons/Year

Flow Diagram Designation
LML Pouring Operations
East Jordan Foundry, LLC
HAP Emission Calculations

Maximum Hourly Capacity
28.00 Tons/Hour

Control Device: Baghouses A/B
Capture Efficiency 99 %
Control Efficiency 99 %

	HAPs	CAS #	Emission Factor lb/ton	Controls Note 2	Emissions lbs/hr	Emissions tons/yr
Note 1	Antimony (Sb)	7440-36-0				
Note 1	Arsenic (As)	7440-38-2	1.14E-05	Baghouse	6.35E-06	**1.45E-05**
Note 1	Beryllium (Be)	7440-41-7				
Note 1	Cadmium (Cd)	7440-43-9	8.81E-06	Baghouse	4.91E-06	**1.12E-05**
Note 1	Chromium (Cr)	7440-47-3	6.72E-05	Baghouse	3.74E-05	**8.56E-05**
Note 1	Cobalt (Co)	7440-48-4	5.13E-03	Baghouse	2.86E-03	**6.53E-03**
Note 1	Lead (Pb)	7439-92-1				
	Manganese (Mn)	7439-96-5	2.04E-03	Baghouse	1.14E-03	**2.60E-03**
Note 1	Mercury (Hg)	7439-97-6				
Note 1	Nickel (Ni)	7440-02-0	No Data	Baghouse		
Note 1	Selenium (Se)	7782-49-2				
Note 1	Acetaldehyde	75-07-0	4.18E-04	Baghouse	1.17E-02	**2.68E-02**
	Dimethylnaphthalenes	28804-88-8				
	Cresol	1319-77-3				
	Methylnaphthalenes	90-12-0				
	Propionaldehyde	123-38-6				
	Methylene diphenyl diisocyanate (MDI)	101-68-8				
	4,4-methylenedianiline (MBA)	101-77-9				
Note 1	Formaldehyde	50-00-0	2.61E-04	None	7.31E-03	**1.67E-02**
Note 1	Cumene	98-82-8	1.33E-05	None	3.72E-04	**8.51E-04**
Note 1	Benzene	71-43-2	3.48E-03	None	9.74E-02	**2.23E-01**
Note 1	O-Xylene	95-47-6	2.70E-04	None	7.56E-03	**1.73E-02**
Note 1	M-Xylene	108-38-3	6.10E-04	None	1.71E-02	**3.90E-02**
Note 1	Phenol	108-95-2	4.60E-04	None	1.29E-02	**2.94E-02**
Note 1	Naphthalene	91-20-3	2.72E-04	None	7.62E-03	**1.74E-02**
Note 1	Ethyl Benzene	100-41-4	1.38E-04	None	3.86E-03	**8.83E-03**
	Hydrogen Flouride	7664-39-3				
Note 1	Toluene	108-88-3	1.52E-03	None	4.26E-02	**9.73E-02**
	P-Xylene	106-42-3				
	Hexane	110-54-3				
	Xylenes	1330-20-7			**2.46E-02**	**5.63E-02**
Note 1	o-Cresol	95-48-7	6.60E-06	None	1.85E-04	**4.22E-04**
Note 1	Styrene	100-42-5	8.28E-05	None	2.32E-03	**5.30E-03**
	Acetophenone	98-86-2				
	Dibenzofurans	132-64-9				
	Nitrobenzene	98-95-3				
Note 1	Total POMs		5.50E-04	None	0.015	**0.035**
	Total HAPs				**0.215**	**0.491**

Note 1: Emission factors taken from the document entitled "Foundry Process Emission Factors: Baseline Emissions from Automotive Foundries in Mexico"; (CERP-Mexico)
Note 2: HAPs that are particulates are captured by the Baghouse. A conservative control efficiency of 95% was utilized for the control efficiency of captured emissions. A capture rate of 90% was used.
Note 3: Max emissions from this line. Combined group limit on Pouring and Cooling of 28 tph, 128,000 tpy throughput due to max melt rate upstream

PROPOSED OPERATING SCHEDULE
24 HRS/DAY
6,000 HRS/YEAR

Form AI-S003(6) Supplement
Potential to Emit
Emissions Calculations
East Jordan Foundry, LLC

Maximum Yearly Capacity
128,000 Tons/Year

Flow Diagram Designation
1230 Pouring Operations
East Jordan Foundry, LLC
HAP Emission Calculations

Maximum Hourly Capacity
28.00 Tons/Hour

Control Device: Baghouses A/B
Capture Efficiency 99 %
Control Efficiency 99 %

	HAPs	CAS #	Emission Factor lb/ton	Controls Note 2	Emissions lbs/hr	Emissions tons/yr
Note 1	Antimony (Sb)	7440-36-0				
Note 1	Arsenic (As)	7440-38-2	1.14E-05	Baghouse	6.35E-06	**1.45E-05**
Note 1	Beryllium (Be)	7440-41-7				
Note 1	Cadmium (Cd)	7440-43-9	8.81E-06	Baghouse	4.91E-06	**1.12E-05**
Note 1	Chromium (Cr)	7440-47-3	6.72E-05	Baghouse	3.74E-05	**8.56E-05**
Note 1	Cobalt (Co)	7440-48-4	5.13E-03	Baghouse	2.86E-03	**6.53E-03**
Note 1	Lead (Pb)	7439-92-1				
	Manganese (Mn)	7439-96-5	2.04E-03	Baghouse	1.14E-03	**2.60E-03**
Note 1	Mercury (Hg)	7439-97-6				
Note 1	Nickel (Ni)	7440-02-0	No Data	Baghouse		
Note 1	Selenium (Se)	7782-49-2				
Note 1	Acetaldehyde	75-07-0	4.18E-04	Baghouse	1.17E-02	**2.68E-02**
	Dimethylnaphthalenes	28804-88-8				
	Cresol	1319-77-3				
	Methylnaphthalenes	90-12-0				
	Propionaldehyde	123-38-6				
	Methylene diphenyl diisocyanate (MDI)	101-68-8				
	4,4-methylenedianiline (MBA)	101-77-9				
Note 1	Formaldehyde	50-00-0	2.61E-04	None	7.31E-03	**1.67E-02**
Note 1	Cumene	98-82-8	1.33E-05	None	3.72E-04	**8.51E-04**
Note 1	Benzene	71-43-2	3.48E-03	None	9.74E-02	**2.23E-01**
Note 1	O-Xylene	95-47-6	2.70E-04	None	7.56E-03	**1.73E-02**
Note 1	M-Xylene	108-38-3	6.10E-04	None	1.71E-02	**3.90E-02**
Note 1	Phenol	108-95-2	4.60E-04	None	1.29E-02	**2.94E-02**
Note 1	Naphthalene	91-20-3	2.72E-04	None	7.62E-03	**1.74E-02**
Note 1	Ethyl Benzene	100-41-4	1.38E-04	None	3.86E-03	**8.83E-03**
	Hydrogen Flouride	7664-39-3				
Note 1	Toluene	108-88-3	1.52E-03	None	4.26E-02	**9.73E-02**
	P-Xylene	106-42-3				
	Hexane	110-54-3				
	Xylenes	1330-20-7			**2.46E-02**	**5.63E-02**
Note 1	o-Cresol	95-48-7	6.60E-06	None	1.85E-04	**4.22E-04**
Note 1	Styrene	100-42-5	8.28E-05	None	2.32E-03	**5.30E-03**
	Acetophenone	98-86-2				
	Dibenzofurans	132-64-9				
	Nitrobenzene	98-95-3				
Note 1	Total POMs		5.50E-04	None	0.015	**0.035**
	Total HAPs				**0.215**	**0.491**

Note 1: Emission factors taken from the document entitled "Foundry Process Emission Factors: Baseline Emissions from Automotive Foundries in Mexico"; (CERP-Mexico)

Note 2: HAPs that are particulates are captured by the Baghouse. A conservative control efficiency of 95% was utilized for the control efficiency of captured emissions. A capture rate of 90% was used.

Note 3: Max emissions from this line. Combined group limit on Pouring and Cooling of 28 tph, 128,000 tpy throughput due to max melt rate upstream

PROPOSED OPERATING SCHEDULE
24 HRS/DAY
6,000 HRS/YEAR

Form AI-S003(6) Supplement
Potential to Emit
Emissions Calculations
East Jordan Foundry, LLC

Maximum Yearly Capacity
128,000 Tons/Year

Flow Diagram Designation
LML Mold Cooling Operations
East Jordan Foundry, LLC
HAP Emission Calculations

Maximum Hourly Capacity
28.00 Tons/Hour

Control Device: aghouses A/B, D
Capture Efficiency 100 %
Control Efficiency 99 %

	HAPs	CAS #	Emission Factor lb/ton	Controls Note 2	Emissions lbs/hr	Emissions tons/yr
Note 1	Antimony (Sb)	7440-36-0	6.21E-05	Baghouse	1.74E-05	**3.97E-05**
	Arsenic (As)	7440-38-2				
	Beryllium (Be)	7440-41-7				
Note 1	Cadmium (Cd)	7440-43-9	4.37E-05	Baghouse	1.22E-05	**2.80E-05**
Note 1	Chromium (Cr)	7440-47-3	3.12E-04	Baghouse	8.74E-05	**2.00E-04**
Note 1	Cobalt (Co)	7440-48-4	1.72E-04	Baghouse	4.82E-05	**1.10E-04**
	Lead (Pb)	7439-92-1				
Note 1	Manganese (Mn)	7439-96-5	1.12E-03	Baghouse	3.14E-04	**7.17E-04**
	Mercury (Hg)	7439-97-6				
Note 1	Nickel (Ni)	7440-02-0	4.32E-04	Baghouse	1.21E-04	**2.76E-04**
Note 1	Selenium (Se)	7782-49-2	2.46E-05	Baghouse	6.89E-06	
Note 1	Acetaldehyde	75-07-0	4.30E-03	Baghouse	1.20E-01	**2.75E-01**
	Dimethylnaphthalenes	28804-88-8				
	Cresol	1319-77-3				
	Methylnaphthalenes	90-12-0				
Note 1	Propionaldehyde	123-38-6	5.68E-05	Baghouse	1.59E-03	**3.64E-03**
	Methylene diphenyl diisocyanate (MDI)	101-68-8				
	4,4-methylenedianiline (MBA)	101-77-9				
Note 1	Formaldehyde	50-00-0	2.67E-03	None	7.48E-02	**1.71E-01**
Note 1	Cumene	98-82-8	1.92E-04	None	5.38E-03	**1.23E-02**
Note 1	Benzene	71-43-2	4.53E-02	None	1.27E+00	**2.90E+00**
Note 1	O-Xylene	95-47-6	4.93E-03	None	1.38E-01	**3.16E-01**
Note 1	M-Xylene	108-38-3	9.55E-03	None	2.67E-01	**6.11E-01**
Note 1	Phenol	108-95-2	8.64E-03	None	2.42E-01	**5.53E-01**
Note 1	Naphthalene	91-20-3	3.87E-03	None	1.08E-01	**2.48E-01**
Note 1	Ethyl Benzene	100-41-4	2.34E-03	None	6.55E-02	**1.50E-01**
	Hydrogen Flouride	7664-39-3				
Note 1	Toluene	108-88-3	2.44E-02	None	6.83E-01	**1.56E+00**
	P-Xylene	106-42-3				
	Hexane	110-54-3				
	Xylenes	1330-20-7			4.05E-01	**9.27E-01**
Note 1	o-Cresol	95-48-7	1.51E-03	None	4.23E-02	**9.66E-02**
Note 1	Styrene	100-42-5	8.26E-04	None	2.31E-02	**5.29E-02**
Note 1	Acetophenone	98-86-2	7.90E-04	None	2.21E-02	**5.06E-02**
Note 1	Dibenzofurans	132-64-9	5.39E-05	None	1.51E-03	**3.45E-03**
Note 1	Nitrobenzene	98-95-3	2.01E-05	None	5.63E-04	**1.29E-03**
Note 1	Total POMs		8.99E-03	None	0.252	**0.575**
	Total HAPs				**3.041**	**6.951**

Note 1: Emission factors taken from the document entitled "Foundry Process Emission Factors: Baseline Emissions from Automotive Foundries in Mexico"; (CERP-Mexico)

Note 2: HAPs that are particulates are captured by the Baghouse. A conservative control efficiency of 95% was utilized for the control efficiency of captured emissions. A capture rate of 98% was used.

Note 3: Max emissions from this line. Combined group limit on Pouring and Cooling of 28 tph, 128,000 tpy throughput due to max melt rate upstream

PROPOSED OPERATING SCHEDULE
24 HRS/DAY
6,000 HRS/YEAR

Form AI-S003(6) Supplement
Potential to Emit
Emissions Calculations
East Jordan Foundry, LLC

Maximum Yearly Capacity
128,000 Tons/Year

Flow Diagram Designation
1230 Mold Cooling Operations
East Jordan Foundry, LLC
HAP Emission Calculations

Maximum Hourly Capacity
28.00 Tons/Hour

Control Device: aghouses A/B, D
Capture Efficiency 100 %
Control Efficiency 99 %

	HAPs	CAS #	Emission Factor lb/ton	Controls Note 2	Emissions lbs/hr	Emissions tons/yr
Note 1	Antimony (Sb)	7440-36-0	6.21E-05	Baghouse	1.74E-05	**3.97E-05**
	Arsenic (As)	7440-38-2				
	Beryllium (Be)	7440-41-7				
Note 1	Cadmium (Cd)	7440-43-9	4.37E-05	Baghouse	1.22E-05	**2.80E-05**
Note 1	Chromium (Cr)	7440-47-3	3.12E-04	Baghouse	8.74E-05	**2.00E-04**
Note 1	Cobalt (Co)	7440-48-4	1.72E-04	Baghouse	4.82E-05	**1.10E-04**
	Lead (Pb)	7439-92-1				
Note 1	Manganese (Mn)	7439-96-5	1.12E-03	Baghouse	3.14E-04	**7.17E-04**
	Mercury (Hg)	7439-97-6				
Note 1	Nickel (Ni)	7440-02-0	4.32E-04	Baghouse	1.21E-04	**2.76E-04**
Note 1	Selenium (Se)	7782-49-2	2.46E-05	Baghouse	6.89E-06	
Note 1	Acetaldehyde	75-07-0	4.30E-03	Baghouse	1.20E-01	**2.75E-01**
	Dimethylnaphthalenes	28804-88-8				
	Cresol	1319-77-3				
	Methylnaphthalenes	90-12-0				
Note 1	Propionaldehyde	123-38-6	5.68E-05	Baghouse	1.59E-03	**3.64E-03**
	Methylene diphenyl diisocyanate (MDI)	101-68-8				
	4,4-methylenedianiline (MBA)	101-77-9				
Note 1	Formaldehyde	50-00-0	2.67E-03	None	7.48E-02	**1.71E-01**
Note 1	Cumene	98-82-8	1.92E-04	None	5.38E-03	**1.23E-02**
Note 1	Benzene	71-43-2	4.53E-02	None	1.27E+00	**2.90E+00**
Note 1	O-Xylene	95-47-6	4.93E-03	None	1.38E-01	**3.16E-01**
Note 1	M-Xylene	108-38-3	9.55E-03	None	2.67E-01	**6.11E-01**
Note 1	Phenol	108-95-2	8.64E-03	None	2.42E-01	**5.53E-01**
Note 1	Naphthalene	91-20-3	3.87E-03	None	1.08E-01	**2.48E-01**
Note 1	Ethyl Benzene	100-41-4	2.34E-03	None	6.55E-02	**1.50E-01**
	Hydrogen Flouride	7664-39-3				
Note 1	Toluene	108-88-3	2.44E-02	None	6.83E-01	**1.56E+00**
	P-Xylene	106-42-3				
	Hexane	110-54-3				
	Xylenes	1330-20-7			4.05E-01	**9.27E-01**
Note 1	o-Cresol	95-48-7	1.51E-03	None	4.23E-02	**9.66E-02**
Note 1	Styrene	100-42-5	8.26E-04	None	2.31E-02	**5.29E-02**
Note 1	Acetophenone	98-86-2	7.90E-04	None	2.21E-02	**5.06E-02**
Note 1	Dibenzofurans	132-64-9	5.39E-05	None	1.51E-03	**3.45E-03**
Note 1	Nitrobenzene	98-95-3	2.01E-05	None	5.63E-04	**1.29E-03**
Note 1	Total POMs		8.99E-03	None	0.252	**0.575**
	Total HAPs				**3.041**	**6.951**

Note 1: Emission factors taken from the document entitled "Foundry Process Emission Factors: Baseline Emissions from Automotive Foundries in Mexico"; (CERP-Mexico)

Note 2: HAPs that are particulates are captured by the Baghouse. A conservative control efficiency of 95% was utilized for the control efficiency of captured emissions. A capture rate of 98% was used.

Note 3: Max emissions from this line. Combined group limit on Pouring and Cooling of 28 tph, 128,000 tpy throughput due to max melt rate upstream

PROPOSED OPERATING SCHEDULE
24 HRS/DAY
6,000 HRS/YEAR

Form AI-S003(6) Supplement
Potential to Emit
Emissions Calculations
East Jordan Foundry, LLC

Maximum Yearly Capacity
128,000 Tons/Year

Flow Diagram Designation
LML Shakeout

Maximum Hourly Capacity
28.00 Tons/Hour

Process Description:
East Jordan Foundry, LLC
LML Shakeout
Control Device: Baghouses C, D, E
SCC Code:
Control Device Outlet: gr/dscf gr/dscf
Airflow: acfm acfm
Stack Gas Temperature: 100 °F

Facility Process Name:			**Criteria Pollutants**								
	LML Shakeout										
Emission Factor Basis:			**PM**	**PM10**	**PM2.5**	**SOx**	**NOx**	**VOC**	**CO**	**Lead**	**CO_2e**
Emission Factors:		lb/ton	3.20	2.24	1.34		0.002	0.528	1.592	1.26E-04	
(source)			Note 1	Note 6	Note 6		Note 5	Note 4	Note 2	Note 3	Note 4
		Capture Efficiency	100.00	100.00	100.00		100.00	100.00	100.00	100.00	
		Control Efficiency									
		Building Capt. Eff									
Maximum Stack Emission Rate:											
	Hourly (lb/hr)		See Controlling BH(s) for Stk Emissions				0.056	14.784	44.574	3.53E-03	
	Annual (TPY)		See Controlling BH(s) for Stk Emissions				**0.128**	**33.792**	**101.883**	**8.06E-03**	
Maximum Fugitive Emission Rate:											
	Hourly (lb/hr)										
	Annual (TPY)										
Total Emission Rate:											
	Hourly (lb/hr)						0.056	14.784	44.574	3.53E-03	
	Annual (TPY)						**0.128**	**33.792**	**101.883**	**8.06E-03**	

PROPOSED OPERATING SCHEDULE
22 HRS/DAY
6,000 HRS/YEAR

Note 1: Emission factor from FIRE 6.25 SCC 3-04-003-31
Note 2: EJIW-Ardmore Foundry Stack Testing (Oct 2010). Results used with Wheland and Technikon information to distribute between melting, pouring, cooling and shakeout.
Note 3: Factors: Baseline Emissions from Automotive Foundries in Mexico"
Note 4: C02e emissions included in Pouring & Mold Cooling Tab
Note 5: Emission factor from EJIW stack test (July 2010)
Note 6: Emission factor based on USEPA PM Calculator (March 2012) PM to PM2.5 ratio and uncontrolled PM emission factor.
Note 7: Max emissions from this line. Combined group limit on Shakeout of 28 tph, 128,000 tpy throughput due to max melt rate upstream

EXAMPLE CALCULATIONS:
Maximum Stack Emission Rate (lb/hr) {PM,PM-10} =(gr/acfm) x (acfm) x (1 lb / 7000 grains) x (60 min / 1 hr)
Maximum Stack Emission Rate (lb/hr) {Lead} =(gr/acfm) x (acfm) x (1 lb / 7000 grains) x (60 min / 1 hr) x (EF for Lead/EF for PM-10)
Maximum Stack Emissions Rate (lb/hr) {VOC, CO} =(Max. Rated Capacity ton/hr) x (EF in lb/ton) x (Capture Eff./100)
Maximum Annual (Ton/yr) PM, PM10 and lead stack Emission Rates = (lb/hr emission rate) x (hours of operation per year at max. rate) x (ton/2000 lbs)
Maximum Annual (ton/yr) VOC and CO stack emissions= (Hourly stack emissions (lb/hr)/ hourly Process rate (ton/hr) x (Annual process rate (tons/yr) x (ton/2000 lbs)
Maximum Fugitive Emission Rate (lb/hr) = ((1 - Capture Efficiency/100) x (Emission Factor) x (Melt ton/hr) x (1-(Settling Factor)/100)
Maximum Annual Fugitive Emissions (ton/yr)= (Hourly fugitive emissions (lb/hr)/ hourly Process rate (ton/hr) x (Annual process rate (tons/yr) x (ton/2000 lbs)
Total Emission Rate (lb/hr) = (Maximum Stack Emission Rate lb/hr) + (Maximum Fugitive Emission Rate lb/hr)
Total Emission Rates Annual (TPY)= (annual stack emissions (ton/yr)) + (annual fugitive emissions (ton/yr))

Form AI-S003(6) Supplement
Potential to Emit
Emissions Calculations
East Jordan Foundry, LLC

Maximum Yearly Capacity
128,000 Tons/Year

Flow Diagram Designation
1230 Shakeout

Maximum Hourly Capacity
28.00 Tons/Hour

Process Description:
East Jordan Foundry, LLC
1230 Shakeout
Control Device: Baghouses C, D, E
SCC Code:
Control Device Outlet: gr/dscf gr/dscf
Airflow: acfm acfm
Stack Gas Temperature: 100 °F

Facility Process Name:			Criteria Pollutants								
1230 Shakeout											
Emission Factor Basis:			**PM**	**PM10**	**PM2.5**	**SOx**	**NOx**	**VOC**	**CO**	**Lead**	**CO_2e**
Emission Factors:		lb/ton	3.20	2.24	1.34		0.002	0.528	1.592	1.26E-04	
(source)			Note 1	Note 6	Note 6		Note 5	Note 4	Note 2	Note 3	Note 4
		Capture Efficiency	100.00	100.00	100.00		100.00	100.00	100.00	100.00	
		Control Efficiency									
		Building Capt. Eff									
Maximum Stack Emission Rate:											
	Hourly (lb/hr)		See Controlling BH(s) for Stk Emissions				0.056	14.784	44.574	3.53E-03	
	Annual (TPY)		See Controlling BH(s) for Stk Emissions				**0.128**	**33.792**	**101.883**	**8.06E-03**	
Maximum Fugitive Emission Rate:											
	Hourly (lb/hr)										
	Annual (TPY)										
Total Emission Rate:											
	Hourly (lb/hr)						0.056	14.784	44.574	3.53E-03	
	Annual (TPY)						**0.128**	**33.792**	**101.883**	**8.06E-03**	

PROPOSED OPERATING SCHEDULE
22 HRS/DAY
6,000 HRS/YEAR

Note 1: Emission factor from FIRE 6.25 SCC 3-04-003-31
Note 2: EJIW-Ardmore Foundry Stack Testing (Oct 2010) Results used with Wheland and Technikon information to distribute between melting, pouring, cooling and shakeout.
Note 3: Factors: Baseline Emissions from Automotive Foundries in Mexico"
Note 4: C02e emissions included in Pouring & Mold Cooling Tab
Note 5: Emission factor from EJIW stack test (July 2010)
Note 6: Emission factor based on USEPA PM Calculator (March 2012) PM to PM2.5 ratio and uncontrolled PM emission factor
Note 7: Max emissions from this line. Combined group limit on Shakeout of 28 tph, 128,000 tpy throughput due to max melt rate upstream

EXAMPLE CALCULATIONS:
Maximum Stack Emission Rate (lb/hr) {PM,PM-10} =(gr/acfm) x (acfm) x (1 lb / 7000 grains) x (60 min / 1 hr)
Maximum Stack Emission Rate (lb/hr) {Lead} =(gr/acfm) x (acfm) x (1 lb / 7000 grains) x (60 min / 1 hr) x (EF for Lead/EF for PM-10)
Maximum Stack Emissions Rate (lb/hr) {VOC, CO} =(Max. Rated Capacity ton/hr) x (EF in lb/ton) x (Capture Eff./100)
Maximum Annual (Ton/yr) PM, PM10 and lead stack Emission Rates = (lb/hr emission rate) x (hours of operation per year at max. rate) x (ton/2000 lbs)
Maximum Annual (ton/yr) VOC and CO stack emissions= (Hourly stack emissions (lb/hr)/ hourly Process rate (ton/hr) x (Annual process rate (tons/yr) x (ton/2000 lbs)
Maximum Fugitive Emission Rate (lb/hr) = ((1 - Capture Efficiency/100) x (Emission Factor) x (Melt ton/hr) x (1-(Settling Factor)/100)
Maximum Annual Fugitive Emissions (ton/yr)= (Hourly fugitive emissions (lb/hr)/ hourly Process rate (ton/hr) x (Annual process rate (tons/yr) x (ton/2000 lbs)
Total Emission Rate (lb/hr) = (Maximum Stack Emission Rate lb/hr) + (Maximum Fugitive Emission Rate lb/hr)
Total Emission Rates Annual (TPY)= (annual stack emissions (ton/yr)) + (annual fugitive emissions (ton/yr))

Form AI-S003(6) Supplement
Potential to Emit
Emissions Calculations
East Jordan Foundry, LLC

Maximum Yearly Capacity
128,000 Tons/Year

Flow Diagram Designation
LML Shakeout HAPS
East Jordan Foundry, LLC
HAP Emission Calculations

Maximum Hourly Capacity
28.00 Tons/Hour

Control Device: Baghouses C, D, E
Capture Efficiency 100 %
Control Efficiency 95 %

	HAPs	CAS #	Emission Factor lb/ton	Controls Note 2	Emissions lbs/hr	Emissions tons/yr
Note 1	Antimony (Sb)	7440-36-0	7.59E-06	Baghouse	1.06E-05	**2.43E-05**
	Arsenic (As)	7440-38-2				
	Beryllium (Be)	7440-41-7				
Note 1	Cadmium (Cd)	7440-43-9	1.67E-05	Baghouse	2.34E-05	**5.34E-05**
Note 1	Chromium (Cr)	7440-47-3	3.00E-04	Baghouse	4.20E-04	**9.60E-04**
Note 1	Cobalt (Co)	7440-48-4	2.49E-04	Baghouse	3.49E-04	**7.97E-04**
	Lead (Pb)	7439-92-1				
Note 1	Manganese (Mn)	7439-96-5	7.47E-04	Baghouse	1.05E-03	**2.39E-03**
	Mercury (Hg)	7439-97-6				
Note 1	Nickel (Ni)	7440-02-0	6.66E-04	Baghouse	9.32E-04	**2.13E-03**
	Selenium (Se)	7782-49-2				
Note 1	Acetaldehyde	75-07-0	5.78E-02	None	1.62E+00	**3.70E+00**
	Dimethylnaphthalenes	28804-88-8				
	Cresol	1319-77-3				
	Methylnaphthalenes	90-12-0				
Note 1	Propionaldehyde	123-38-6	5.70E-03	None	1.60E-01	**3.65E-01**
	Methylene diphenyl diisocyanate (MDI)	101-68-8				
	4,4-methylenedianiline (MBA)	101-77-9				
Note 1	Formaldehyde	50-00-0	2.57E-02	None	7.20E-01	**1.64E+00**
Note 1	Cumene	98-82-8	3.82E-04	None	1.07E-02	**2.44E-02**
Note 1	Benzene	71-43-2	2.68E-02	None	7.50E-01	**1.72E+00**
Note 1	O-Xylene	95-47-6	5.32E-03	None	1.49E-01	**3.40E-01**
Note 1	M-Xylene	108-38-3	1.25E-02	None	3.50E-01	**8.00E-01**
Note 1	Phenol	108-95-2	2.80E-02	None	7.84E-01	**1.79E+00**
Note 1	Naphthalene	91-20-3	8.37E-03	None	2.34E-01	**5.36E-01**
Note 1	Ethyl Benzene	100-41-4	2.91E-03	None	8.15E-02	**1.86E-01**
	Hydrogen Flouride	7664-39-3				
Note 1	Toluene	108-88-3	2.21E-02	None	6.19E-01	**1.41E+00**
	P-Xylene	106-42-3				
	Hexane	110-54-3				
Note 1	Xylenes	1330-20-7	1.78E-02	None	4.98E-01	**1.14E+00**
Note 1	o-Cresol	95-48-7	1.40E-02	None	3.92E-01	**8.96E-01**
Note 1	Styrene	100-42-5	4.81E-03	None	1.35E-01	**3.08E-01**
Note 1	Acetophenone	98-86-2	7.92E-04	None	2.22E-02	**5.07E-02**
Note 1	Dibenzofurans	132-64-9	3.34E-04	None	9.35E-03	**2.14E-02**
	Nitrobenzene	98-95-3				
Note 1	Total POMs		2.21E-02	None	0.619	**1.414**
	Total HAPs				**6.536**	**14.939**

Note 1: Emission factors taken from the document entitled "Foundry Process Emission Factors: Baseline Emissions from Automotive Foundries in Mexico"; (CERP-Mexico)

Note 2: HAPs that are particulates are captured by the Baghouse. A conservative control efficiency of 95% was utilized with 99% capture for the emission calculations.

Note 3: Max emissions from this line. Combined group limit on Shakeout of 28 tph, 128,000 tpy throughput due to max melt rate upstream

PROPOSED OPERATING SCHEDULE
22 HRS/DAY
6,000 HRS/YEAR

Form AI-S003(6) Supplement
Potential to Emit
Emissions Calculations
East Jordan Foundry, LLC

Maximum Yearly Capacity
128,000 Tons/Year

Flow Diagram Designation
1230 Shakeout HAPS
East Jordan Foundry, LLC
HAP Emission Calculations

Maximum Hourly Capacity
28.00 Tons/Hour

Control Device: Baghouses C, D, E
Capture Efficiency 100 %
Control Efficiency 95 %

	HAPs	CAS #	Emission Factor lb/ton	Controls Note 2	Emissions lbs/hr	Emissions tons/yr
Note 1	Antimony (Sb)	7440-36-0	7.59E-06	Baghouse	1.06E-05	**2.43E-05**
	Arsenic (As)	7440-38-2				
	Beryllium (Be)	7440-41-7				
Note 1	Cadmium (Cd)	7440-43-9	1.67E-05	Baghouse	2.34E-05	**5.34E-05**
Note 1	Chromium (Cr)	7440-47-3	3.00E-04	Baghouse	4.20E-04	**9.60E-04**
Note 1	Cobalt (Co)	7440-48-4	2.49E-04	Baghouse	3.49E-04	**7.97E-04**
	Lead (Pb)	7439-92-1				
Note 1	Manganese (Mn)	7439-96-5	7.47E-04	Baghouse	1.05E-03	**2.39E-03**
	Mercury (Hg)	7439-97-6				
Note 1	Nickel (Ni)	7440-02-0	6.66E-04	Baghouse	9.32E-04	**2.13E-03**
	Selenium (Se)	7782-49-2				
Note 1	Acetaldehyde	75-07-0	5.78E-02	None	1.62E+00	**3.70E+00**
	Dimethylnaphthalenes	28804-88-8				
	Cresol	1319-77-3				
	Methylnaphthalenes	90-12-0				
Note 1	Propionaldehyde	123-38-6	5.70E-03	None	1.60E-01	**3.65E-01**
	Methylene diphenyl diisocyanate (MDI)	101-68-8				
	4,4-methylenedianiline (MBA)	101-77-9				
Note 1	Formaldehyde	50-00-0	2.57E-02	None	7.20E-01	**1.64E+00**
Note 1	Cumene	98-82-8	3.82E-04	None	1.07E-02	**2.44E-02**
Note 1	Benzene	71-43-2	2.68E-02	None	7.50E-01	**1.72E+00**
Note 1	O-Xylene	95-47-6	5.32E-03	None	1.49E-01	**3.40E-01**
Note 1	M-Xylene	108-38-3	1.25E-02	None	3.50E-01	**8.00E-01**
Note 1	Phenol	108-95-2	2.80E-02	None	7.84E-01	**1.79E+00**
Note 1	Naphthalene	91-20-3	8.37E-03	None	2.34E-01	**5.36E-01**
Note 1	Ethyl Benzene	100-41-4	2.91E-03	None	8.15E-02	**1.86E-01**
	Hydrogen Flouride	7664-39-3				
Note 1	Toluene	108-88-3	2.21E-02	None	6.19E-01	**1.41E+00**
	P-Xylene	106-42-3				
	Hexane	110-54-3				
Note 1	Xylenes	1330-20-7	1.78E-02	None	4.98E-01	**1.14E+00**
Note 1	o-Cresol	95-48-7	1.40E-02	None	3.92E-01	**8.96E-01**
Note 1	Styrene	100-42-5	4.81E-03	None	1.35E-01	**3.08E-01**
Note 1	Acetophenone	98-86-2	7.92E-04	None	2.22E-02	**5.07E-02**
Note 1	Dibenzofurans	132-64-9	3.34E-04	None	9.35E-03	**2.14E-02**
	Nitrobenzene	98-95-3				
Note 1	Total POMs		2.21E-02	None	0.619	**1.414**
	Total HAPs				**6.536**	**14.939**

Note 1: Emission factors taken from the document entitled "Foundry Process Emission Factors: Baseline Emissions from Automotive Foundries in Mexico"; (CERP-Mexico)

Note 2: HAPs that are particulates are captured by the Baghouse. A conservative control efficiency of 95% was utilized with 99% capture for the emission calculations.

Note 3: Max emissions from this line. Combined group limit on Shakeout of 28 tph, 128,000 tpy throughput due to max melt rate upstream

PROPOSED OPERATING SCHEDULE
22 HRS/DAY
6,000 HRS/YEAR

Form AI-S003(6) Supplement
Potential to Emit
Emissions Calculations
East Jordan Foundry, LLC

Maximum Yearly Capacity
128,000 Tons/Year

Flow Diagram Designation
Shotblast

Maximum Hourly Capacity
28.00 Tons/Hour

Process Description:
East Jordan Foundry, LLC
Shotblast
Control Device: Baghouses H/J
SCC Code:
Control Device Outlet: gr/dscf
Airflow: acfm
Stack Gas Temperature: 100 °F

Facility Process Name:			**Criteria Pollutants**								
	Shotblast										
Emission Factor Basis:			**PM**	**PM10**	**PM2.5**	**SOx**	**NOx**	**VOC**	**CO**	**Lead**	**CO_2e**
Emission Factors:	lb/ton		15.50	1.70	1.70						
(source)			Note 1	Note 2	Note 3						
		Capture Efficiency	100.00	100.00	100.00						
		Control Efficiency									
		Building Capt. Eff									
Maximum Stack Emission Rate:											
	Hourly (lb/hr)		See Controlling BH(s) for Stk Emissions								
	Annual (TPY)		See Controlling BH(s) for Stk Emissions								
Maximum Fugitive Emission Rate:											
	Hourly (lb/hr)										
	Annual (TPY)										
Total Emission Rate:											
	Hourly (lb/hr)										
	Annual (TPY)										

PROPOSED OPERATING SCHEDULE
24 HRS/DAY
6,000 HRS/YEAR

Note 1: Emission factor from Bernard S. Gutow article
Note 2: Emission factor from FIRE 6.25 SCC 3-04-003-40
Note 3: Assumes $PM^{2.5}$ is equal to PM_{10}

EXAMPLE CALCULATIONS:
Maximum Stack Emission Rate (lb/hr) {PM,PM-10} =(gr/acfm) x (acfm) x (1 lb / 7000 grains) x (60 min / 1 hr)
Maximum Annual (Ton/yr) stack Emission Rates = (lb/hr emission rate) x (hours of operation per year at max. rate) x (ton/2000 lbs)
Maximum Fugitive Emission Rate (lb/hr) = ((1 - Capture Efficiency/100) x (Emission Factor) x (Melt ton/hr) x (1-(Settling Factor)/100)
Maximum Annual Fugitive Emissions (ton/yr)= (Hourly fugitive emissions (lb/hr)/ hourly Process rate (ton/hr) x (Annual process rate (tons/yr) x (ton/2000 lbs)
Total Emission Rate (lb/hr) = (Maximum Stack Emission Rate lb/hr) + (Maximum Fugitive Emission Rate lb/hr)
Total Emission Rates Annual (TPY)= (annual stack emissions (ton/yr)) + (annual fugitive emissions (ton/yr))

Form AI-S003(6) Supplement
Potential to Emit
Emissions Calculations
East Jordan Foundry, LLC

Maximum Yearly Capacity
128,000 Tons/Year

Flow Diagram Designation
Grinding

Maximum Hourly Capacity
28.00 Tons/Hour

Process Description:
East Jordan Foundry, LLC
Grinding
Control Device: Baghouses H/J
SCC Code:
Control Device Outlet: gr/dscf
Airflow: acfm
Stack Gas Temperature: 100 °F

Facility Process Name:		Criteria Pollutants								
Grinding										
Emission Factor Basis:		PM	PM10	PM2.5	SOx	NOx	VOC	CO	Lead	CO_2e
Emission Factors:	lb/ton	1.60	0.005	0.005						
(source)		Note 1	Note 2	Note 3						
	Capture Efficiency	99.00	99.00	99.00						
	Control Efficiency									
	Building Capt. Eff	70.00	70.00	70.00						
Maximum Stack Emission Rate:										
Hourly (lb/hr)		See Controlling BH(s) for Stk Emissions								
Annual (TPY)		See Controlling BH(s) for Stk Emissions								
Maximum Fugitive Emission Rate:										
Hourly (lb/hr)		0.134	0.000	0.000						
Annual (TPY)		**0.307**	**0.001**	**0.001**						
Total Emission Rate:										
Hourly (lb/hr)		0.134	0.000	0.000						
Annual (TPY)		**0.307**	**0.001**	**0.001**						

PROPOSED OPERATING SCHEDULE
24 HRS/DAY
6,000 HRS/YEAR

Note 1: Emission factor from Bernard S. Gutow article
Note 2: Emission factor from FIRE 6.25 SCC 3-04-003-60
Note 3: Assumes PM2.5 is equal to PM10

EXAMPLE CALCULATIONS:
Maximum Stack Emission Rate (lb/hr) {PM,PM-10} =(gr/acfm) x (acfm) x (1 lb / 7000 grains) x (60 min / 1 hr)
Maximum Annual (Ton/yr) stack Emission Rates = (lb/hr emission rate) x (hours of operation per year at max. rate) x (ton/2000 lbs)
Maximum Fugitive Emission Rate (lb/hr) = ((1 - Capture Efficiency/100) x (Emission Factor) x (Melt ton/hr) x (1-(Settling Factor)/100)
Maximum Annual Fugitive Emissions (ton/yr)= (Hourly fugitive emissions (lb/hr)/ hourly Process rate (ton/hr) x (Annual process rate (tons/yr) x (ton/2000 lbs)
Total Emission Rate (lb/hr) = (Maximum Stack Emission Rate lb/hr) + (Maximum Fugitive Emission Rate lb/hr)
Total Emission Rates Annual (TPY)= (annual stack emissions (ton/yr)) + (annual fugitive emissions (ton/yr))

Form AI-S003(6) Supplement
Potential to Emit
Emissions Calculations
East Jordan Foundry, LLC

Maximum Yearly Capacity
1,920,000 Tons/Year

Flow Diagram Designation
Sand Handling & Storage (H&S)

Maximum Hourly Capacity
390.00 Tons/Hour

Process Description:
East Jordan Foundry, LLC
Sand Handling & Storage (H&S)
Control Device: Baghouse E, F, G, H/J
SCC Code:
Control Device Outlet: gr/dscf
Airflow: acfm
Stack Gas Temperature: 100 °F

Facility Process Name:			Criteria Pollutants								
	Sand Handling & Storage (H&S)										
Emission Factor Basis:			PM	PM10	PM2.5	SOx	NOx	VOC	CO	Lead	CO_2e
Emission Factors:		lb/ton	3.60	0.54	0.54						
(source)			Note 1,3	Note 1,3	Note 2,3			Note 4			
		Capture Efficiency	99.90	99.90	99.90						
		Control Efficiency									
		Building Capt. Eff	70.00	70.00	70.00						
Maximum Stack Emission Rate:											
	Hourly (lb/hr)		See Controlling BH(s) for Stk Emissions								
	Annual (TPY)		See Controlling BH(s) for Stk Emissions								
Maximum Fugitive Emission Rate:											
	Hourly (lb/hr)		0.421	0.063	0.063						
	Annual (TPY)		**1.037**	**0.156**	**0.156**						
Total Emission Rate:											
	Hourly (lb/hr)		0.421	0.063	0.063						
	Annual (TPY)		**1.037**	**0.156**	**0.156**						

PROPOSED OPERATING SCHEDULE
22 HRS/DAY
6,000 HRS/YEAR

Note 1: Emission factor from FIRE 6.25 SCC 3-04-003-50
Note 2: Assumes PM2.5 is equal to PM10
Note 3: Includes mold making PM emissions.
Note 4: Mold making VOC emissions included with Pouring & Cooling VOC EF.

EXAMPLE CALCULATIONS:
Maximum Stack Emission Rate (lb/hr) {PM,PM-10} =(gr/acfm) x (acfm) x (1 lb / 7000 grains) x (60 min / 1 hr)
Maximum Annual (Ton/yr) stack Emission Rates = (lb/hr emission rate) x (hours of operation per year at max. rate) x (ton/2000 lbs)
Maximum Fugitive Emission Rate (lb/hr) = ((1 - Capture Efficiency/100) x (Emission Factor) x (Melt ton/hr) x (1-(Settling Factor)/100)
Maximum Annual Fugitive Emissions (ton/yr)= (Hourly fugitive emissions (lb/hr)) x (8760 hrs/yr) x (ton/2000 lbs)
Total Emission Rate (lb/hr) = (Maximum Stack Emission Rate lb/hr) + (Maximum Fugitive Emission Rate lb/hr)
Total Emission Rates Annual (TPY)= (annual stack emissions (ton/yr)) + (annual fugitive emissions (ton/yr))

Form AI-S003(6) Supplement
Potential to Emit
Emissions Calculations
East Jordan Foundry, LLC

Maximum Yearly Capacity
1,500 Tons/Year

Flow Diagram Designation
Shell Coremaking

Maximum Hourly Capacity
0.48 Tons/Hour

Process Description:
East Jordan Foundry, LLC
Shell Coremaking
Control Device: Baghouse L
SCC Code:
Control Device Outlet: gr/dscf
Airflow: acfm
Stack Gas Temperature: °F

Facility Process Name:		Criteria Pollutants								
Shell Coremaking										
Emission Factor Basis:		PM	PM10	PM2.5	SOx	NOx	VOC	CO	Lead	CO_2e
Emission Factors:	lb/ton	0.35	0.35	0.11			0.2%			
(source)		Note 1	Note 1	Note 2			Note 3			
Capture Efficiency		99.00	99.00	99.00						
Control Efficiency										
Building Capt. Eff		70.00	70.00	70.00						
Maximum Stack Emission Rate:										
Hourly (lb/hr)		See Controlling BH(s) for Stk Emissions					0.001			
Annual (TPY)		See Controlling BH(s) for Stk Emissions					**0.001**			
Maximum Fugitive Emission Rate:										
Hourly (lb/hr)		0.001	0.001	0.000			1.824			
Annual (TPY)		**0.001**	**0.001**	**0.000**			**2.850**			
Total Emission Rate:										
Hourly (lb/hr)		0.001	0.001	0.000			1.825			
Annual (TPY)		**0.001**	**0.001**	**0.000**			**2.851**			

PROPOSED OPERATING SCHEDULE
24 HRS/DAY
6,000 HRS/YEAR

Note 1 Ohio RACM Guide, Page 2-219, Table 2 7-1, Emission Factor #15 gives uncontrolled emission factors of 0 3 lb/ton of sand mixed for mixing and 0 35 lb/ton of cores made from making the cores. No mixing will be conducted, the shell sand will be input directly into the machines. Therefore an emission factor of 0 35 lb/ton of cores made will be utilized.
Note 2 Emission factor based on USEPA PM Calculator (March 2012) PM to PM2 5 ratio and uncontrolled PM emission factor
Note 3 %wt - Discussions w/Borden rep Regarding Super F E19E19 MSDS

EXAMPLE CALCULATIONS:
Maximum Fugitive Emission Rate (lb/hr) = (Emission Factor) x (process weight rate (ton/hr)) x (1-(Settling Factor)/100)
Annual (TPY) Emission Rates = (lb/hr emission rate) x (1/ Maximum Hourly Process Rate (tons/hr)) x (Annual process weight rate (tons/yr))x (ton/2000)

East Jordan Foundry, LLC
HAP Emission Calculations
Shell Coremaking

HAPs	CAS #	Emission Factor %wt	Emissions lbs/hr	Emissions tons/yr	
Antimony (Sb)	7440-36-0				
Arsenic (As)	7440-38-2				
Beryllium (Be)	7440-41-7				
Cadmium (Cd)	7440-43-9				
Chromium (Cr)	7440-47-3				
Cobalt (Co)	7440-48-4				
Lead (Pb)	7439-92-1				
Manganese (Mn)	7439-96-5				
Mercury (Hg)	7439-97-6				
Nickel (Ni)	7440-02-0				
Selenium (Se)	7782-49-2				
Acetaldehyde	75-07-0				
Dimethylnaphthalenes	28804-88-8				
Cresol	1319-77-3				
Methylnaphthalenes	90-12-0				
Propionaldehyde	123-38-6				
Methylene diphenyl diisocyanate (MDI)	101-68-8				
4,4-methylenedianiline (MBA)	101-77-9				
Formaldehyde	50-00-0	0.02%	0.19	**0.30**	Note 3
Cumene	98-82-8				
Benzene	71-43-2				
O-Xylene	95-47-6				
M-Xylene	108-38-3				
Phenol	108-95-2	0.08%	0.77	**1.20**	Note 3
Naphthalene	91-20-3				
Ethyl Benzene	100-41-4				
Hydrogen Flouride	7664-39-3				
Toluene	108-88-3				
P-Xylene	106-42-3				
Hexane	110-54-3				
Xylenes	1330-20-7				
o-Cresol	95-48-7				
Styrene	100-42-5				
Acetophenone	98-86-2				
Dibenzofurans	132-64-9				
Nitrobenzene	98-95-3				
Total HAPs			**9.60E-01**	**1.50E+00**	

Form AI-S003(6) Supplement
Potential to Emit
Emissions Calculations
East Jordan Foundry, LLC

Flow Diagram Designation
Shell Core NG

Process Description:
Shell Core NG
Control Device: None

Natural Gas Combustion

Inputs

3	= Max. Hourly Heat Input Rate (MMBtu/hr) Note 1
1020	= MMBtu/MMscf
2941.2	= Max. Hourly Fuel Usage Rate (standard cubic feet hour)
6000	= Maximum Operation (hours/year)
17.64706	= Maximum Annual Fuel Usage (MMscf)

POLLUTANT	CAS #	Note 2 Emission Factor (lb/10^6 scf)	Maximum Emissions (lbs/hr)	(tpy)
PM/PM10/PM2.5	n/a	7.6	0.02	6.71E-02
NOx	n/a	100.0	0.29	8.82E-01
CO	n/a	84.0	0.25	7.41E-01
Lead	n/a	0.0005	1.47E-06	4.41E-06
SO2	n/a	0.6	0.002	5.29E-03
VOC	n/a	5.5	0.02	4.85E-02
CO_2e	n/a	120,000	352.94	1.06E+03
Arsenic (As)	7440-38-2	2.00E-04	5.88E-07	1.76E-06
Beryllium (Be)	7440-41-7	1.20E-05	3.53E-08	1.06E-07
Cadmium (Cd)	7440-43-9	1.10E-03	3.24E-06	9.71E-06
Chromium (Cr)	7440-47-3	1.40E-03	4.12E-06	1.24E-05
Cobalt (Co)	7440-48-4	8.40E-05	2.47E-07	7.41E-07
Manganese (Mn)	7439-96-5	3.80E-04	1.12E-06	3.35E-06
Mercury (Hg)	7439-97-6	2.60E-04	7.65E-07	2.29E-06
Nickel (Ni)	7440-02-0	2.10E-03	6.18E-06	1.85E-05
Selenium (Se)	7782-49-2	2.40E-05	7.06E-08	2.12E-07
POM/2-Methylnaphthalene	91-57-6	2.40E-05	7.06E-08	2.12E-07
POM/3-Methylchloranthrene	56-49-5	1.80E-06	5.29E-09	1.59E-08
POM/7,12-Dimethylbenz(a)anthracene	57-97-6	1.60E-05	4.71E-08	1.41E-07
POM/Acenaphthene	83-32-9	1.80E-06	5.29E-09	1.59E-08
POM/Acenaphthylene	203-96-8	1.80E-06	5.29E-09	1.59E-08
POM/Anthracene	120-12-7	2.40E-06	7.06E-09	2.12E-08
POM/Benz(a)anthracene	56-55-3	1.80E-06	5.29E-09	1.59E-08
Benzene	71-43-2	2.10E-03	6.18E-06	1.85E-05
POM/Benzo(a)pyrene	50-32-8	1.20E-06	3.53E-09	1.06E-08
POM/Benzo(b)fluoranthene	205-99-2	1.20E-06	3.53E-09	1.06E-08
POM/Benzo(g,h,i)perylene	191-24-2	1.20E-06	3.53E-09	1.06E-08
POM/Benzo(k)fluoranthene	205-82-3	1.80E-06	5.29E-09	1.59E-08
POM/Chrysene	218-01-9	1.80E-06	5.29E-09	1.59E-08
POM/Dibenzo(a,h)anthracene	53-70-3	1.20E-06	3.53E-09	1.06E-08
Dichlorobenzene	25321-22-6	1.20E-03	3.53E-06	1.06E-05
POM/Fluoranthene	206-44-0	3.00E-06	8.82E-09	2.65E-08
POM/Fluorene	86-73-7	2.80E-06	8.24E-09	2.47E-08
Formaldehyde	50-00-0	7.50E-02	2.21E-04	6.62E-04
Hexane	110-54-3	1.80E+00	5.29E-03	1.59E-02
POM/Indeno(1,2,3-cd)pyrene	193-39-5	1.80E-06	5.29E-09	1.59E-08
Naphthalene	91-20-3	6.10E-04	1.79E-06	5.38E-06
POM/Phenanathrene	85-01-8	1.70E-05	5.00E-08	1.50E-07
POM/Pyrene	129-00-0	5.00E-06	1.47E-08	4.41E-08
Toluene	108-88-3	3.40E-03	1.00E-05	3.00E-05
Total POM			2.58E-07	7.73E-07
Total HAPs			5.55E-03	1.67E-02

Note 1: Two (2) machines - 0.5 MMBTU/HR each
Note 2: FROM AP-42 Fifth Edition, Supplement D, TABLE 1.4-2&3&4. 7/98 External Combustion Sources 1.4-9. Many emission factors < than specific value. In this case, specific value used to error on conservative side

EXAMPLE CALCULATIONS:
Maximum Hourly Emission = Max.hourly Fuel Usage rate (standard cubic feet hour) x (Pollutant E.F.)
Maximum Yearly Emission = Max.Hourly Emission Rate (lb/hr) x (Maximum Hours of Operation)

Form AI-S003(6) Supplement
Potential to Emit
Emissions Calculations
East Jordan Foundry, LLC

Maximum Yearly Capacity
3,000 Tons/Year

Flow Diagram Designation
PUCB Coremaking

Maximum Hourly Capacity
12.77 Tons/Hour

Process Description:
East Jordan Foundry, LLC
PUCB Coremaking
Control Device: Baghouse L
SCC Code:
Control Device Outlet: gr/dscf
Airflow: acfm
Stack Gas Temperature: 100 °F

Facility Process Name:		Criteria Pollutants								
PUCB Coremaking										
Emission Factor Basis:		PM	PM10	PM2.5	SOx	NOx	VOC	CO	Lead	CO_2e
Emission Factors:		0.65	0.65	0.65						
(source)		Note 1	Note 1	Note 1						
	Capture Efficiency	99.00	99.00	99.00						
	Control Efficiency	98.00	98.00	98.00						
	Building Capt. Eff	70.00	70.00	70.00						
Maximum Stack Emission Rate:										
Hourly (lb/hr)		See Controlling BH(s) for Stk Emissions								
Annual (TPY)		See Controlling BH(s) for Stk Emissions								
Maximum Fugitive Emission Rate:										
Hourly (lb/hr)		0.025	0.025	0.025						
Annual (TPY)		**0.003**	**0.003**	**0.003**						
Total Emission Rate:										
Hourly (lb/hr)		0.025	0.025	0.025						
Annual (TPY)		**0.003**	**0.003**	**0.003**						

PROPOSED OPERATING SCHEDULE
24 HRS/DAY
6,000 HRS/YEAR

Note 1: Ohio RACM Guide, Page 2-219, Table 2.7-1

EXAMPLE CALCULATIONS:
Maximum Fugitive Emission Rate (lb/hr) = (Emission Factor) x (process weight rate (ton/hr)) x (1-(Settling Factor)/100)
Annual (TPY) Emission Rates = (lb/hr emission rate) x (1/ Maximum Hourly Process Rate (tons/hr)) x (Annual process weight rate (tons/yr))x (ton/2000)

Form AI-S003(6) Supplement
Potential to Emit
Emissions Calculations
East Jordan Foundry, LLC

Maximum Yearly Capacity
3,000 Tons/Year

Flow Diagram Designation
PUCB Coremaking
East Jordan Foundry, LLC
Air Toxic Emission Estimates from PUCB Core Making
Isocure I 316 T/Isocure II 616 T

Maximum Hourly Capacity
12.77 Tons/Hour

1.0% % resin usage (of sand)
11% % catalyst usage (of resin)
45% % by weight Part 1
55% % by weight Part 2

	Air Toxics	CAS #	% by Weight*	Basis	Control Efficiency %	Emission Factor (E.F.) lb/ton Note 1	Emissions Factor Basis	Maximum Emissions lb/hr	Maximum Emissions tons/yr
	Total VOCs					1.13	Note 2	14.472	1.700
	Part 1 - Pep Set X 1024								
Note 3	Phenol	108-95-2	10.00%	SDS		-		0.000	0.000
	1,2,4-Trimethylbenzene	95-63-6	5.00%	SDS		0.015		0.187	0.022
	Cumene	98-82-8	0.50%	SDS		0.001		0.019	0.002
	Part 2 - Pep Set X II 2024								
	Catalyst								
	1,2,4-Trimethylbenzene	95-63-6	1.50%	SDS		0.004		0.056	0.007
	Naphthalene	91-20-3	10.00%	SDS		0.029		0.374	0.044
	Total HAPs							0.635	0.075

Note 1: Form R Reporting of Binder Chemicals Used in Foundries indicates that for PUCB binder systems, the following is emitted:
3.25% of all Napthalene and 1,2,4 Trimethylbenzene present and 2% of Formaldehyde is emitted from Part I.
0% of all Phenol present is emitted from Part I.
0% of all MDI (and monomer) and Polymeric Dipheylmethane Diisocyanate present is emitted from Part II.
It is assumed that what remains in the core will be released and counted in the Pouring & Cooling emissions.
Note 2: Email from ASK Chemicals' Jim Archibald on May 16, 2013.
Note 3: Hazardous Air Pollutant (HAP) as defined by Section 112(b) of the Clean Air Act
Note 4: Indicates compound is a Polycylic Organic Matter (POM)

Form AI-S003(6) Supplement
Potential to Emit
Emissions Calculations
East Jordan Foundry, LLC

Maximum Yearly Capacity
Tons/Year

Maximum Hourly Capacity
Tons/Hour

Flow Diagram Designation
Mold & Core Room Chemicals
East Jordan Foundry, LLC
VOC & HAP Emission Estimates from Mold & Core Room chemicals

	Material/TAC	CAS Number	Maximum Usage lbs/hr	Maximum Usage lbs/yr	VOC/TAC Content (% by wt)	VOC Control Efficiency (% Reduction)	Factor Basis	Emissions lb/hr	Emissions tons/yr
	Core Wash - Low VOC		5	25000	1%	0%	Material Balance	0.05	0.13
	VELVAPLASTTM TGW 053 COATING								
Note 1	Methanol	67-56-1			0.01%	0%	Material Balance	0.001	0.001
Note 1	Diethylene Glycol	111-46-6			0.01%	0%	Material Balance	0.001	0.001
Note 2	Hydrotreated light silicon	64742-47-8			1.00%	0%	Material Balance	0.05	0.13
	VELVALITE GA 2								
	No TACs emitted								
	Core Wash - Alcohol Based								
	VELVALITETM ZGA 065 Coating		5	20000	25%	70%	Material Balance	0.38	0.75
Note 2	Isopropyl Alcohol	67-63-0			25%	70%	Material Balance	0.38	0.75
	IPA Thinning Solvent		2.5	11000	100%	70%	Material Balance	0.75	1.65
Note 2	Isopropyl Alcohol	67-63-0			100%	70%	Material Balance	0.75	1.65
	Core Release - Shell Core								
	Nix Stix HCLVOC		0.1	150	50%	0%	Material Balance	0.05	0.04
Note 2	Acetaldehyde	75-07-0			0.1%	0%		0.0001	0.0001
	Core Release - No Bake								
	Zip Slip 125H		0.1	150	0.79%	0%	Material Balance	0.001	0.001
Note 2	High molecular wt. silicon	63148-62-9			100%	0%		0.10	0.08
							TOTAL	**1.23**	**2.56**

Note 1: Per ASK email, the maximum concentration of either TAC is less than 0.01%. Added 07/2019
Note 2: Maximum SDS % by weight per SDS. Added 09/2019

PROPOSED OPERATING SCHEDULE
24 HRS/DAY
6,000 HRS/YEAR

Form AI-S003(6) Supplement
Potential to Emit
Emissions Calculations
East Jordan Foundry, LLC

Maximum Yearly Capacity
64,620 Gal/Year Note 1

Flow Diagram Designation
Asphaltic Dip Coating

Maximum Hourly Capacity
17.23 Gal/Hour Note 1

Process Description:
East Jordan Foundry, LLC
Asphaltic Dip Coating
Control Device: None
SCC Code:
Control Device Outlet: gr/dscf
Airflow: acfm
Stack Gas Temperature: °F

Facility Process Name:		Criteria Pollutants								
	Asphaltic Dip Coating									
Emission Factor Basis:		PM	PM10	PM2.5	SOx	NOx	VOC	CO	Lead	CO_2e
Emission Factors:	lb/gal						0.47			
(source)							Note 2			
	Capture Efficiency									
	Control Efficiency									
	Building Capt. Eff									
Maximum Stack Emission Rate:										
	Hourly (lb/hr)									
	Annual (TPY)									
Maximum Fugitive Emission Rate:										
	Hourly (lb/hr)						8.099			
	Annual (TPY)						**15.186**			
Total Emission Rate:										
	Hourly (lb/hr)						8.099			
	Annual (TPY)						**15.186**			

PROPOSED OPERATING SCHEDULE
22 HRS/DAY
6,000 HRS/YEAR

Note 1: Throughput rate based on 1.077 gal coating per ton melted at maximum melting rate and assuming coating is applied to 50% of total melted thoughput
Note 2: Vulcan MC4 VOC content from EPA Method 24 analysis, no HAPs exist in this substance

EXAMPLE CALCULATIONS:
Maximum Fugitive Emission Rate (lb/hr) = (Maximum Hourly Production gal/hr) x (VOC content lb/gal)
Maximum Annual Fugitive Emissions (ton/yr)= (Maximum Annual Production gal/yr) x (VOC content lb/gal) / (2000 lb/ton)

Form AI-S003(6) Supplement
Potential to Emit
Emissions Calculations
East Jordan Foundry, LLC

Flow Diagram Designation
Asphaltic Dip Tank Post Heater

Process Description:
Asphaltic Dip Tank Post Heater
Control Device: None

Natural Gas Combustion

Inputs

3.64	= Max. Hourly Heat Input Rate (MMBtu/hr)
1020	= MMBtu/MMscf
3568.6	= Max. Hourly Fuel Usage Rate (standard cubic feet hour)
6000	= Maximum Operation (hours/year)
21.41176	= Maximum Annual Fuel Usage (MMscf)

POLLUTANT	CAS #	Note 1 Emission Factor (lb/10^6 scf)	Maximum Emissions (lbs/hr)	(tpy)
PM/PM10/PM2.5	n/a	7.6	0.03	8.14E-02
NOx	n/a	100.0	0.36	1.07E+00
CO	n/a	84.0	0.30	8.99E-01
Lead	n/a	0.0005	1.78E-06	5.35E-06
SO2	n/a	0.6	0.002	6.42E-03
VOC	n/a	5.5	0.02	5.89E-02
CO_2e	n/a	120,000	428.24	1.28E+03
Arsenic (As)	7440-38-2	2.00E-04	7.14E-07	2.14E-06
Beryllium (Be)	7440-41-7	1.20E-05	4.28E-08	1.28E-07
Cadmium (Cd)	7440-43-9	1.10E-03	3.93E-06	1.18E-05
Chromium (Cr)	7440-47-3	1.40E-03	5.00E-06	1.50E-05
Cobalt (Co)	7440-48-4	8.40E-05	3.00E-07	8.99E-07
Manganese (Mn)	7439-96-5	3.80E-04	1.36E-06	4.07E-06
Mercury (Hg)	7439-97-6	2.60E-04	9.28E-07	2.78E-06
Nickel (Ni)	7440-02-0	2.10E-03	7.49E-06	2.25E-05
Selenium (Se)	7782-49-2	2.40E-05	8.56E-08	2.57E-07
POM/2-Methylnaphthalene	91-57-6	2.40E-05	8.56E-08	2.57E-07
POM/3-Methylchloranthrene	56-49-5	1.80E-06	6.42E-09	1.93E-08
POM/7,12-Dimethylbenz(a)anthracene	57-97-6	1.60E-05	5.71E-08	1.71E-07
POM/Acenaphthene	83-32-9	1.80E-06	6.42E-09	1.93E-08
POM/Acenaphthylene	203-96-8	1.80E-06	6.42E-09	1.93E-08
POM/Anthracene	120-12-7	2.40E-06	8.56E-09	2.57E-08
POM/Benz(a)anthracene	56-55-3	1.80E-06	6.42E-09	1.93E-08
Benzene	71-43-2	2.10E-03	7.49E-06	2.25E-05
POM/Benzo(a)pyrene	50-32-8	1.20E-06	4.28E-09	1.28E-08
POM/Benzo(b)fluoranthene	205-99-2	1.20E-06	4.28E-09	1.28E-08
POM/Benzo(g,h,i)perylene	191-24-2	1.20E-06	4.28E-09	1.28E-08
POM/Benzo(k)fluoranthene	205-82-3	1.80E-06	6.42E-09	1.93E-08
POM/Chrysene	218-01-9	1.80E-06	6.42E-09	1.93E-08
POM/Dibenzo(a,h)anthracene	53-70-3	1.20E-06	4.28E-09	1.28E-08
Dichlorobenzene	25321-22-6	1.20E-03	4.28E-06	1.28E-05
POM/Fluoranthene	206-44-0	3.00E-06	1.07E-08	3.21E-08
POM/Fluorene	86-73-7	2.80E-06	9.99E-09	3.00E-08
Formaldehyde	50-00-0	7.50E-02	2.68E-04	8.03E-04
Hexane	110-54-3	1.80E+00	6.42E-03	1.93E-02
POM/Indeno(1,2,3-cd)pyrene	193-39-5	1.80E-06	6.42E-09	1.93E-08
Naphthalene	91-20-3	6.10E-04	2.18E-06	6.53E-06
POM/Phenanathrene	85-01-8	1.70E-05	6.07E-08	1.82E-07
POM/Pyrene	129-00-0	5.00E-06	1.78E-08	5.35E-08
Toluene	108-88-3	3.40E-03	1.21E-05	3.64E-05
Total POM			3.13E-07	9.38E-07
Total HAPs			6.74E-03	2.02E-02

Note 1: FROM AP-42 Fifth Edition, Supplement D, TABLE 1.4-2&3&4. 7/98 External Combustion Sources 1.4-9. Many emission factors < than specific value. In this case, specific value used to error on conservative side

EXAMPLE CALCULATIONS:
Maximum Hourly Emission = Max.hourly Fuel Usage rate (standard cubic feet hour) x (Pollutant E.F.)
Maximum Yearly Emission = Max.Hourly Emission Rate (lb/hr) x (Maximum Hours of Operation)

Form AI-S003(6) Supplement
Potential to Emit
Emissions Calculations
East Jordan Foundry, LLC

Flow Diagram Designation
MUA-1

Process Description:
MUA-1
Control Device: None

Natural Gas Combustion

Inputs

7.30296	= Max. Hourly Heat Input Rate (MMBtu/hr)
1020	= MMBtu/MMscf
7159.8	= Max. Hourly Fuel Usage Rate (standard cubic feet hour)
4000	= Maximum Operation (hours/year)
28.63906	= Maximum Annual Fuel Usage (MMscf)

POLLUTANT	CAS #	Note 1 Emission Factor ($lb/10^6$ scf)	Maximum Emissions (lbs/hr)	Maximum Emissions (tpy)
PM/PM10/PM2.5	n/a	7.6	0.05	1.09E-01
NOx	n/a	100.0	0.72	1.43E+00
CO	n/a	84.0	0.60	1.20E+00
Lead	n/a	0.0005	3.58E-06	7.16E-06
SO2	n/a	0.6	0.004	8.59E-03
VOC	n/a	5.5	0.04	7.88E-02
CO_2e	n/a	120,000	859.17	1.72E+03
Arsenic (As)	7440-38-2	2.00E-04	1.43E-06	2.86E-06
Beryllium (Be)	7440-41-7	1.20E-05	8.59E-08	1.72E-07
Cadmium (Cd)	7440-43-9	1.10E-03	7.88E-06	1.58E-05
Chromium (Cr)	7440-47-3	1.40E-03	1.00E-05	2.00E-05
Cobalt (Co)	7440-48-4	8.40E-05	6.01E-07	1.20E-06
Manganese (Mn)	7439-96-5	3.80E-04	2.72E-06	5.44E-06
Mercury (Hg)	7439-97-6	2.60E-04	1.86E-06	3.72E-06
Nickel (Ni)	7440-02-0	2.10E-03	1.50E-05	3.01E-05
Selenium (Se)	7782-49-2	2.40E-05	1.72E-07	3.44E-07
POM/2-Methylnaphthalene	91-57-6	2.40E-05	1.72E-07	3.44E-07
POM/3-Methylchloranthrene	56-49-5	1.80E-06	1.29E-08	2.58E-08
POM/7,12-Dimethylbenz(a)anthracene	57-97-6	1.60E-05	1.15E-07	2.29E-07
POM/Acenaphthene	83-32-9	1.80E-06	1.29E-08	2.58E-08
POM/Acenaphthylene	203-96-8	1.80E-06	1.29E-08	2.58E-08
POM/Anthracene	120-12-7	2.40E-06	1.72E-08	3.44E-08
POM/Benz(a)anthracene	56-55-3	1.80E-06	1.29E-08	2.58E-08
Benzene	71-43-2	2.10E-03	1.50E-05	3.01E-05
POM/Benzo(a)pyrene	50-32-8	1.20E-06	8.59E-09	1.72E-08
POM/Benzo(b)fluoranthene	205-99-2	1.20E-06	8.59E-09	1.72E-08
POM/Benzo(g,h,i)perylene	191-24-2	1.20E-06	8.59E-09	1.72E-08
POM/Benzo(k)fluoranthene	205-82-3	1.80E-06	1.29E-08	2.58E-08
POM/Chrysene	218-01-9	1.80E-06	1.29E-08	2.58E-08
POM/Dibenzo(a,h)anthracene	53-70-3	1.20E-06	8.59E-09	1.72E-08
Dichlorobenzene	25321-22-6	1.20E-03	8.59E-06	1.72E-05
POM/Fluoranthene	206-44-0	3.00E-06	2.15E-08	4.30E-08
POM/Fluorene	86-73-7	2.80E-06	2.00E-08	4.01E-08
Formaldehyde	50-00-0	7.50E-02	5.37E-04	1.07E-03
Hexane	110-54-3	1.80E+00	1.29E-02	2.58E-02
POM/Indeno(1,2,3-cd)pyrene	193-39-5	1.80E-06	1.29E-08	2.58E-08
Naphthalene	91-20-3	6.10E-04	4.37E-06	8.73E-06
POM/Phenanathrene	85-01-8	1.70E-05	1.22E-07	2.43E-07
POM/Pyrene	129-00-0	5.00E-06	3.58E-08	7.16E-08
Toluene	108-88-3	3.40E-03	2.43E-05	4.87E-05
Total POM			6.27E-07	1.25E-06
Total HAPs			1.35E-02	2.70E-02

Note 1: FROM AP-42 Fifth Edition, Supplement D, TABLE 1.4-2&3&4. 7/98 External Combustion Sources 1.4-9. Many emission factors < than specific value. In this case, specific value used to error on conservative side

EXAMPLE CALCULATIONS:
Maximum Hourly Emission = Max.hourly Fuel Usage rate (standard cubic feet hour) x (Pollutant E.F.)
Maximum Yearly Emission = Max.Hourly Emission Rate (lb/hr) x (Maximum Hours of Operation)

Form AI-S003(6) Supplement
Potential to Emit
Emissions Calculations
East Jordan Foundry, LLC

Flow Diagram Designation
MUA-2

Process Description:
MUA-2
Control Device: None

Natural Gas Combustion

Inputs	
7.30296	= Max. Hourly Heat Input Rate (MMBtu/hr)
1020	= MMBtu/MMscf
7159.8	= Max. Hourly Fuel Usage Rate (standard cubic feet hour)
4000	= Maximum Operation (hours/year)
28.63906	= Maximum Annual Fuel Usage (MMscf)

POLLUTANT	CAS #	Note 1 Emission Factor ($lb/10^6$ scf)	Maximum Emissions (lbs/hr)	(tpy)
PM/PM10/PM2.5	n/a	7.6	0.05	1.09E-01
NOx	n/a	100.0	0.72	1.43E+00
CO	n/a	84.0	0.60	1.20E+00
Lead	n/a	0.0005	3.58E-06	7.16E-06
SO2	n/a	0.6	0.004	8.59E-03
VOC	n/a	5.5	0.04	7.88E-02
CO_2e	n/a	120,000	859.17	1.72E+03
Arsenic (As)	7440-38-2	2.00E-04	1.43E-06	2.86E-06
Beryllium (Be)	7440-41-7	1.20E-05	8.59E-08	1.72E-07
Cadmium (Cd)	7440-43-9	1.10E-03	7.88E-06	1.58E-05
Chromium (Cr)	7440-47-3	1.40E-03	1.00E-05	2.00E-05
Cobalt (Co)	7440-48-4	8.40E-05	6.01E-07	1.20E-06
Manganese (Mn)	7439-96-5	3.80E-04	2.72E-06	5.44E-06
Mercury (Hg)	7439-97-6	2.60E-04	1.86E-06	3.72E-06
Nickel (Ni)	7440-02-0	2.10E-03	1.50E-05	3.01E-05
Selenium (Se)	7782-49-2	2.40E-05	1.72E-07	3.44E-07
POM/2-Methylnaphthalene	91-57-6	2.40E-05	1.72E-07	3.44E-07
POM/3-Methylchloranthrene	56-49-5	1.80E-06	1.29E-08	2.58E-08
POM/7,12-Dimethylbenz(a)anthracene	57-97-6	1.60E-05	1.15E-07	2.29E-07
POM/Acenaphthene	83-32-9	1.80E-06	1.29E-08	2.58E-08
POM/Acenaphthylene	203-96-8	1.80E-06	1.29E-08	2.58E-08
POM/Anthracene	120-12-7	2.40E-06	1.72E-08	3.44E-08
POM/Benz(a)anthracene	56-55-3	1.80E-06	1.29E-08	2.58E-08
Benzene	71-43-2	2.10E-03	1.50E-05	3.01E-05
POM/Benzo(a)pyrene	50-32-8	1.20E-06	8.59E-09	1.72E-08
POM/Benzo(b)fluoranthene	205-99-2	1.20E-06	8.59E-09	1.72E-08
POM/Benzo(g,h,i)perylene	191-24-2	1.20E-06	8.59E-09	1.72E-08
POM/Benzo(k)fluoranthene	205-82-3	1.80E-06	1.29E-08	2.58E-08
POM/Chrysene	218-01-9	1.80E-06	1.29E-08	2.58E-08
POM/Dibenzo(a,h)anthracene	53-70-3	1.20E-06	8.59E-09	1.72E-08
Dichlorobenzene	25321-22-6	1.20E-03	8.59E-06	1.72E-05
POM/Fluoranthene	206-44-0	3.00E-06	2.15E-08	4.30E-08
POM/Fluorene	86-73-7	2.80E-06	2.00E-08	4.01E-08
Formaldehyde	50-00-0	7.50E-02	5.37E-04	1.07E-03
Hexane	110-54-3	1.80E+00	1.29E-02	2.58E-02
POM/Indeno(1,2,3-cd)pyrene	193-39-5	1.80E-06	1.29E-08	2.58E-08
Naphthalene	91-20-3	6.10E-04	4.37E-06	8.73E-06
POM/Phenanathrene	85-01-8	1.70E-05	1.22E-07	2.43E-07
POM/Pyrene	129-00-0	5.00E-06	3.58E-08	7.16E-08
Toluene	108-88-3	3.40E-03	2.43E-05	4.87E-05
Total POM			6.27E-07	1.25E-06
Total HAPs			1.35E-02	2.70E-02

Note 1: FROM AP-42 Fifth Edition, Supplement D, TABLE 1.4-2&3&4. 7/98 External Combustion Sources 1.4-9. Many emission factors < than specific value. In this case, specific value used to error on conservative side

EXAMPLE CALCULATIONS:
Maximum Hourly Emission = Max.hourly Fuel Usage rate (standard cubic feet hour) x (Pollutant E.F.)
Maximum Yearly Emission = Max.Hourly Emission Rate (lb/hr) x (Maximum Hours of Operation)

Form AI-S003(6) Supplement
Potential to Emit
Emissions Calculations
East Jordan Foundry, LLC

Flow Diagram Designation
MUA-3

Process Description:
MUA-3
Control Device: None

Natural Gas Combustion

Inputs	
7.30296	= Max. Hourly Heat Input Rate (MMBtu/hr)
1020	= MMBtu/MMscf
7159.8	= Max. Hourly Fuel Usage Rate (standard cubic feet hour)
4000	= Maximum Operation (hours/year)
28.63906	= Maximum Annual Fuel Usage (MMscf)

POLLUTANT	CAS #	Note 1 Emission Factor ($lb/10^6$ scf)	Maximum Emissions (lbs/hr)	(tpy)
PM/PM10/PM2.5	n/a	7.6	0.05	1.09E-01
NOx	n/a	100.0	0.72	1.43E+00
CO	n/a	84.0	0.60	1.20E+00
Lead	n/a	0.0005	3.58E-06	7.16E-06
SO2	n/a	0.6	0.004	8.59E-03
VOC	n/a	5.5	0.04	7.88E-02
CO_2e	n/a	120,000	859.17	1.72E+03
Arsenic (As)	7440-38-2	2.00E-04	1.43E-06	2.86E-06
Beryllium (Be)	7440-41-7	1.20E-05	8.59E-08	1.72E-07
Cadmium (Cd)	7440-43-9	1.10E-03	7.88E-06	1.58E-05
Chromium (Cr)	7440-47-3	1.40E-03	1.00E-05	2.00E-05
Cobalt (Co)	7440-48-4	8.40E-05	6.01E-07	1.20E-06
Manganese (Mn)	7439-96-5	3.80E-04	2.72E-06	5.44E-06
Mercury (Hg)	7439-97-6	2.60E-04	1.86E-06	3.72E-06
Nickel (Ni)	7440-02-0	2.10E-03	1.50E-05	3.01E-05
Selenium (Se)	7782-49-2	2.40E-05	1.72E-07	3.44E-07
POM/2-Methylnaphthalene	91-57-6	2.40E-05	1.72E-07	3.44E-07
POM/3-Methylchloranthrene	56-49-5	1.80E-06	1.29E-08	2.58E-08
POM/7,12-Dimethylbenz(a)anthracene	57-97-6	1.60E-05	1.15E-07	2.29E-07
POM/Acenaphthene	83-32-9	1.80E-06	1.29E-08	2.58E-08
POM/Acenaphthylene	203-96-8	1.80E-06	1.29E-08	2.58E-08
POM/Anthracene	120-12-7	2.40E-06	1.72E-08	3.44E-08
POM/Benz(a)anthracene	56-55-3	1.80E-06	1.29E-08	2.58E-08
Benzene	71-43-2	2.10E-03	1.50E-05	3.01E-05
POM/Benzo(a)pyrene	50-32-8	1.20E-06	8.59E-09	1.72E-08
POM/Benzo(b)fluoranthene	205-99-2	1.20E-06	8.59E-09	1.72E-08
POM/Benzo(g,h,i)perylene	191-24-2	1.20E-06	8.59E-09	1.72E-08
POM/Benzo(k)fluoranthene	205-82-3	1.80E-06	1.29E-08	2.58E-08
POM/Chrysene	218-01-9	1.80E-06	1.29E-08	2.58E-08
POM/Dibenzo(a,h)anthracene	53-70-3	1.20E-06	8.59E-09	1.72E-08
Dichlorobenzene	25321-22-6	1.20E-03	8.59E-06	1.72E-05
POM/Fluoranthene	206-44-0	3.00E-06	2.15E-08	4.30E-08
POM/Fluorene	86-73-7	2.80E-06	2.00E-08	4.01E-08
Formaldehyde	50-00-0	7.50E-02	5.37E-04	1.07E-03
Hexane	110-54-3	1.80E+00	1.29E-02	2.58E-02
POM/Indeno(1,2,3-cd)pyrene	193-39-5	1.80E-06	1.29E-08	2.58E-08
Naphthalene	91-20-3	6.10E-04	4.37E-06	8.73E-06
POM/Phenanathrene	85-01-8	1.70E-05	1.22E-07	2.43E-07
POM/Pyrene	129-00-0	5.00E-06	3.58E-08	7.16E-08
Toluene	108-88-3	3.40E-03	2.43E-05	4.87E-05
Total POM			6.27E-07	1.25E-06
Total HAPs			1.35E-02	2.70E-02

Note 1: FROM AP-42 Fifth Edition, Supplement D, TABLE 1.4-2&3&4. 7/98 External Combustion Sources 1.4-9. Many emission factors < than specific value. In this case, specific value used to error on conservative side

EXAMPLE CALCULATIONS:
Maximum Hourly Emission = Max.hourly Fuel Usage rate (standard cubic feet hour) x (Pollutant E.F.)
Maximum Yearly Emission = Max.Hourly Emission Rate (lb/hr) x (Maximum Hours of Operation)

Form AI-S003(6) Supplement
Potential to Emit
Emissions Calculations
East Jordan Foundry, LLC

Flow Diagram Designation
MUA-4

Process Description:
MUA-4
Control Device: None

Natural Gas Combustion

Inputs

7.30296	= Max. Hourly Heat Input Rate (MMBtu/hr)
1020	= MMBtu/MMscf
7159.8	= Max. Hourly Fuel Usage Rate (standard cubic feet hour)
4000	= Maximum Operation (hours/year)
28.63906	= Maximum Annual Fuel Usage (MMscf)

POLLUTANT	CAS #	Note 1 Emission Factor (lb/10^6 scf)	Maximum Emissions (lbs/hr)	(tpy)
PM/PM10/PM2.5	n/a	7.6	0.05	1.09E-01
NOx	n/a	100.0	0.72	1.43E+00
CO	n/a	84.0	0.60	1.20E+00
Lead	n/a	0.0005	3.58E-06	7.16E-06
SO2	n/a	0.6	0.004	8.59E-03
VOC	n/a	5.5	0.04	7.88E-02
CO_2e	n/a	120,000	859.17	1.72E+03
Arsenic (As)	7440-38-2	2.00E-04	1.43E-06	2.86E-06
Beryllium (Be)	7440-41-7	1.20E-05	8.59E-08	1.72E-07
Cadmium (Cd)	7440-43-9	1.10E-03	7.88E-06	1.58E-05
Chromium (Cr)	7440-47-3	1.40E-03	1.00E-05	2.00E-05
Cobalt (Co)	7440-48-4	8.40E-05	6.01E-07	1.20E-06
Manganese (Mn)	7439-96-5	3.80E-04	2.72E-06	5.44E-06
Mercury (Hg)	7439-97-6	2.60E-04	1.86E-06	3.72E-06
Nickel (Ni)	7440-02-0	2.10E-03	1.50E-05	3.01E-05
Selenium (Se)	7782-49-2	2.40E-05	1.72E-07	3.44E-07
POM/2-Methylnaphthalene	91-57-6	2.40E-05	1.72E-07	3.44E-07
POM/3-Methylchloranthrene	56-49-5	1.80E-06	1.29E-08	2.58E-08
POM/7,12-Dimethylbenz(a)anthracene	57-97-6	1.60E-05	1.15E-07	2.29E-07
POM/Acenaphthene	83-32-9	1.80E-06	1.29E-08	2.58E-08
POM/Acenaphthylene	203-96-8	1.80E-06	1.29E-08	2.58E-08
POM/Anthracene	120-12-7	2.40E-06	1.72E-08	3.44E-08
POM/Benz(a)anthracene	56-55-3	1.80E-06	1.29E-08	2.58E-08
Benzene	71-43-2	2.10E-03	1.50E-05	3.01E-05
POM/Benzo(a)pyrene	50-32-8	1.20E-06	8.59E-09	1.72E-08
POM/Benzo(b)fluoranthene	205-99-2	1.20E-06	8.59E-09	1.72E-08
POM/Benzo(g,h,i)perylene	191-24-2	1.20E-06	8.59E-09	1.72E-08
POM/Benzo(k)fluoranthene	205-82-3	1.80E-06	1.29E-08	2.58E-08
POM/Chrysene	218-01-9	1.80E-06	1.29E-08	2.58E-08
POM/Dibenzo(a,h)anthracene	53-70-3	1.20E-06	8.59E-09	1.72E-08
Dichlorobenzene	25321-22-6	1.20E-03	8.59E-06	1.72E-05
POM/Fluoranthene	206-44-0	3.00E-06	2.15E-08	4.30E-08
POM/Fluorene	86-73-7	2.80E-06	2.00E-08	4.01E-08
Formaldehyde	50-00-0	7.50E-02	5.37E-04	1.07E-03
Hexane	110-54-3	1.80E+00	1.29E-02	2.58E-02
POM/Indeno(1,2,3-cd)pyrene	193-39-5	1.80E-06	1.29E-08	2.58E-08
Naphthalene	91-20-3	6.10E-04	4.37E-06	8.73E-06
POM/Phenanathrene	85-01-8	1.70E-05	1.22E-07	2.43E-07
POM/Pyrene	129-00-0	5.00E-06	3.58E-08	7.16E-08
Toluene	108-88-3	3.40E-03	2.43E-05	4.87E-05
Total POM			6.27E-07	1.25E-06
Total HAPs			1.35E-02	2.70E-02

Note 1: FROM AP-42 Fifth Edition, Supplement D, TABLE 1.4-2&3&4. 7/98 External Combustion Sources 1.4-9. Many emission factors < than specific value. In this case, specific value used to error on conservative side

EXAMPLE CALCULATIONS:
Maximum Hourly Emission = Max.hourly Fuel Usage rate (standard cubic feet hour) x (Pollutant E.F.)
Maximum Yearly Emission = Max.Hourly Emission Rate (lb/hr) x (Maximum Hours of Operation)

Form AI-S003(6) Supplement
Potential to Emit
Emissions Calculations
East Jordan Foundry, LLC

Flow Diagram Designation
MUA-5

Process Description:
MUA-5
Control Device: None

Natural Gas Combustion

Inputs	
7.30296	= Max. Hourly Heat Input Rate (MMBtu/hr)
1020	= MMBtu/MMscf
7159.8	= Max. Hourly Fuel Usage Rate (standard cubic feet hour)
4000	= Maximum Operation (hours/year)
28.63906	= Maximum Annual Fuel Usage (MMscf)

POLLUTANT	CAS #	Note 1 Emission Factor ($lb/10^6$ scf)	Maximum Emissions (lbs/hr)	Maximum Emissions (tpy)
PM/PM10/PM2.5	n/a	7.6	0.05	1.09E-01
NOx	n/a	100.0	0.72	1.43E+00
CO	n/a	84.0	0.60	1.20E+00
Lead	n/a	0.0005	3.58E-06	7.16E-06
SO2	n/a	0.6	0.004	8.59E-03
VOC	n/a	5.5	0.04	7.88E-02
CO_2e	n/a	120,000	859.17	1.72E+03
Arsenic (As)	7440-38-2	2.00E-04	1.43E-06	2.86E-06
Beryllium (Be)	7440-41-7	1.20E-05	8.59E-08	1.72E-07
Cadmium (Cd)	7440-43-9	1.10E-03	7.88E-06	1.58E-05
Chromium (Cr)	7440-47-3	1.40E-03	1.00E-05	2.00E-05
Cobalt (Co)	7440-48-4	8.40E-05	6.01E-07	1.20E-06
Manganese (Mn)	7439-96-5	3.80E-04	2.72E-06	5.44E-06
Mercury (Hg)	7439-97-6	2.60E-04	1.86E-06	3.72E-06
Nickel (Ni)	7440-02-0	2.10E-03	1.50E-05	3.01E-05
Selenium (Se)	7782-49-2	2.40E-05	1.72E-07	3.44E-07
POM/2-Methylnaphthalene	91-57-6	2.40E-05	1.72E-07	3.44E-07
POM/3-Methylchloranthrene	56-49-5	1.80E-06	1.29E-08	2.58E-08
POM/7,12-Dimethylbenz(a)anthracene	57-97-6	1.60E-05	1.15E-07	2.29E-07
POM/Acenaphthene	83-32-9	1.80E-06	1.29E-08	2.58E-08
POM/Acenaphthylene	203-96-8	1.80E-06	1.29E-08	2.58E-08
POM/Anthracene	120-12-7	2.40E-06	1.72E-08	3.44E-08
POM/Benz(a)anthracene	56-55-3	1.80E-06	1.29E-08	2.58E-08
Benzene	71-43-2	2.10E-03	1.50E-05	3.01E-05
POM/Benzo(a)pyrene	50-32-8	1.20E-06	8.59E-09	1.72E-08
POM/Benzo(b)fluoranthene	205-99-2	1.20E-06	8.59E-09	1.72E-08
POM/Benzo(g,h,i)perylene	191-24-2	1.20E-06	8.59E-09	1.72E-08
POM/Benzo(k)fluoranthene	205-82-3	1.80E-06	1.29E-08	2.58E-08
POM/Chrysene	218-01-9	1.80E-06	1.29E-08	2.58E-08
POM/Dibenzo(a,h)anthracene	53-70-3	1.20E-06	8.59E-09	1.72E-08
Dichlorobenzene	25321-22-6	1.20E-03	8.59E-06	1.72E-05
POM/Fluoranthene	206-44-0	3.00E-06	2.15E-08	4.30E-08
POM/Fluorene	86-73-7	2.80E-06	2.00E-08	4.01E-08
Formaldehyde	50-00-0	7.50E-02	5.37E-04	1.07E-03
Hexane	110-54-3	1.80E+00	1.29E-02	2.58E-02
POM/Indeno(1,2,3-cd)pyrene	193-39-5	1.80E-06	1.29E-08	2.58E-08
Naphthalene	91-20-3	6.10E-04	4.37E-06	8.73E-06
POM/Phenanathrene	85-01-8	1.70E-05	1.22E-07	2.43E-07
POM/Pyrene	129-00-0	5.00E-06	3.58E-08	7.16E-08
Toluene	108-88-3	3.40E-03	2.43E-05	4.87E-05
Total POM			6.27E-07	1.25E-06
Total HAPs			1.35E-02	2.70E-02

Note 1: FROM AP-42 Fifth Edition, Supplement D, TABLE 1.4-2&3&4. 7/98 External Combustion Sources 1.4-9. Many emission factors < than specific value. In this case, specific value used to error on conservative side

EXAMPLE CALCULATIONS:
Maximum Hourly Emission = Max.hourly Fuel Usage rate (standard cubic feet hour) x (Pollutant E.F.)
Maximum Yearly Emission = Max.Hourly Emission Rate (lb/hr) x (Maximum Hours of Operation)

Form AI-S003(6) Supplement
Potential to Emit
Emissions Calculations
East Jordan Foundry, LLC

Flow Diagram Designation
MUA-6

Process Description:
MUA-6
Control Device: None

Natural Gas Combustion

Inputs

7.30296	= Max. Hourly Heat Input Rate (MMBtu/hr)
1020	= MMBtu/MMscf
7159.8	= Max. Hourly Fuel Usage Rate (standard cubic feet hour)
4000	= Maximum Operation (hours/year)
28.63906	= Maximum Annual Fuel Usage (MMscf)

POLLUTANT	CAS #	Note 1 Emission Factor (lb/10^6 scf)	Maximum Emissions (lbs/hr)	(tpy)
PM/PM10/PM2.5	n/a	7.6	0.05	1.09E-01
NOx	n/a	100.0	0.72	1.43E+00
CO	n/a	84.0	0.60	1.20E+00
Lead	n/a	0.0005	3.58E-06	7.16E-06
SO2	n/a	0.6	0.004	8.59E-03
VOC	n/a	5.5	0.04	7.88E-02
CO_2e	n/a	120,000	859.17	1.72E+03
Arsenic (As)	7440-38-2	2.00E-04	1.43E-06	2.86E-06
Beryllium (Be)	7440-41-7	1.20E-05	8.59E-08	1.72E-07
Cadmium (Cd)	7440-43-9	1.10E-03	7.88E-06	1.58E-05
Chromium (Cr)	7440-47-3	1.40E-03	1.00E-05	2.00E-05
Cobalt (Co)	7440-48-4	8.40E-05	6.01E-07	1.20E-06
Manganese (Mn)	7439-96-5	3.80E-04	2.72E-06	5.44E-06
Mercury (Hg)	7439-97-6	2.60E-04	1.86E-06	3.72E-06
Nickel (Ni)	7440-02-0	2.10E-03	1.50E-05	3.01E-05
Selenium (Se)	7782-49-2	2.40E-05	1.72E-07	3.44E-07
POM/2-Methylnaphthalene	91-57-6	2.40E-05	1.72E-07	3.44E-07
POM/3-Methylchloranthrene	56-49-5	1.80E-06	1.29E-08	2.58E-08
POM/7,12-Dimethylbenz(a)anthracene	57-97-6	1.60E-05	1.15E-07	2.29E-07
POM/Acenaphthene	83-32-9	1.80E-06	1.29E-08	2.58E-08
POM/Acenaphthylene	203-96-8	1.80E-06	1.29E-08	2.58E-08
POM/Anthracene	120-12-7	2.40E-06	1.72E-08	3.44E-08
POM/Benz(a)anthracene	56-55-3	1.80E-06	1.29E-08	2.58E-08
Benzene	71-43-2	2.10E-03	1.50E-05	3.01E-05
POM/Benzo(a)pyrene	50-32-8	1.20E-06	8.59E-09	1.72E-08
POM/Benzo(b)fluoranthene	205-99-2	1.20E-06	8.59E-09	1.72E-08
POM/Benzo(g,h,i)perylene	191-24-2	1.20E-06	8.59E-09	1.72E-08
POM/Benzo(k)fluoranthene	205-82-3	1.80E-06	1.29E-08	2.58E-08
POM/Chrysene	218-01-9	1.80E-06	1.29E-08	2.58E-08
POM/Dibenzo(a,h)anthracene	53-70-3	1.20E-06	8.59E-09	1.72E-08
Dichlorobenzene	25321-22-6	1.20E-03	8.59E-06	1.72E-05
POM/Fluoranthene	206-44-0	3.00E-06	2.15E-08	4.30E-08
POM/Fluorene	86-73-7	2.80E-06	2.00E-08	4.01E-08
Formaldehyde	50-00-0	7.50E-02	5.37E-04	1.07E-03
Hexane	110-54-3	1.80E+00	1.29E-02	2.58E-02
POM/Indeno(1,2,3-cd)pyrene	193-39-5	1.80E-06	1.29E-08	2.58E-08
Naphthalene	91-20-3	6.10E-04	4.37E-06	8.73E-06
POM/Phenanathrene	85-01-8	1.70E-05	1.22E-07	2.43E-07
POM/Pyrene	129-00-0	5.00E-06	3.58E-08	7.16E-08
Toluene	108-88-3	3.40E-03	2.43E-05	4.87E-05
Total POM			6.27E-07	1.25E-06
Total HAPs			1.35E-02	2.70E-02

Note 1: FROM AP-42 Fifth Edition, Supplement D, TABLE 1.4-2&3&4. 7/98 External Combustion Sources 1.4-9. Many emission factors < than specific value. In this case, specific value used to error on conservative side

EXAMPLE CALCULATIONS:
Maximum Hourly Emission = Max.hourly Fuel Usage rate (standard cubic feet hour) x (Pollutant E.F.)
Maximum Yearly Emission = Max.Hourly Emission Rate (lb/hr) x (Maximum Hours of Operation)

Form AI-S003(6) Supplement
Potential to Emit
Emissions Calculations
East Jordan Foundry, LLC

Flow Diagram Designation
MUA-7

Process Description:
MUA-7
Control Device: None

Natural Gas Combustion

Inputs	
7.30296	= Max. Hourly Heat Input Rate (MMBtu/hr)
1020	= MMBtu/MMscf
7159.8	= Max. Hourly Fuel Usage Rate (standard cubic feet hour)
4000	= Maximum Operation (hours/year)
28.63906	= Maximum Annual Fuel Usage (MMscf)

POLLUTANT	CAS #	Note 1 Emission Factor (lb/10^6 scf)	Maximum Emissions (lbs/hr)	(tpy)
PM/PM10/PM2.5	n/a	7.6	0.05	1.09E-01
NOx	n/a	100.0	0.72	1.43E+00
CO	n/a	84.0	0.60	1.20E+00
Lead	n/a	0.0005	3.58E-06	7.16E-06
SO2	n/a	0.6	0.004	8.59E-03
VOC	n/a	5.5	0.04	7.88E-02
CO_2e	n/a	120,000	859.17	1.72E+03
Arsenic (As)	7440-38-2	2.00E-04	1.43E-06	2.86E-06
Beryllium (Be)	7440-41-7	1.20E-05	8.59E-08	1.72E-07
Cadmium (Cd)	7440-43-9	1.10E-03	7.88E-06	1.58E-05
Chromium (Cr)	7440-47-3	1.40E-03	1.00E-05	2.00E-05
Cobalt (Co)	7440-48-4	8.40E-05	6.01E-07	1.20E-06
Manganese (Mn)	7439-96-5	3.80E-04	2.72E-06	5.44E-06
Mercury (Hg)	7439-97-6	2.60E-04	1.86E-06	3.72E-06
Nickel (Ni)	7440-02-0	2.10E-03	1.50E-05	3.01E-05
Selenium (Se)	7782-49-2	2.40E-05	1.72E-07	3.44E-07
POM/2-Methylnaphthalene	91-57-6	2.40E-05	1.72E-07	3.44E-07
POM/3-Methylchloranthrene	56-49-5	1.80E-06	1.29E-08	2.58E-08
POM/7,12-Dimethylbenz(a)anthracene	57-97-6	1.60E-05	1.15E-07	2.29E-07
POM/Acenaphthene	83-32-9	1.80E-06	1.29E-08	2.58E-08
POM/Acenaphthylene	203-96-8	1.80E-06	1.29E-08	2.58E-08
POM/Anthracene	120-12-7	2.40E-06	1.72E-08	3.44E-08
POM/Benz(a)anthracene	56-55-3	1.80E-06	1.29E-08	2.58E-08
Benzene	71-43-2	2.10E-03	1.50E-05	3.01E-05
POM/Benzo(a)pyrene	50-32-8	1.20E-06	8.59E-09	1.72E-08
POM/Benzo(b)fluoranthene	205-99-2	1.20E-06	8.59E-09	1.72E-08
POM/Benzo(g,h,i)perylene	191-24-2	1.20E-06	8.59E-09	1.72E-08
POM/Benzo(k)fluoranthene	205-82-3	1.80E-06	1.29E-08	2.58E-08
POM/Chrysene	218-01-9	1.80E-06	1.29E-08	2.58E-08
POM/Dibenzo(a,h)anthracene	53-70-3	1.20E-06	8.59E-09	1.72E-08
Dichlorobenzene	25321-22-6	1.20E-03	8.59E-06	1.72E-05
POM/Fluoranthene	206-44-0	3.00E-06	2.15E-08	4.30E-08
POM/Fluorene	86-73-7	2.80E-06	2.00E-08	4.01E-08
Formaldehyde	50-00-0	7.50E-02	5.37E-04	1.07E-03
Hexane	110-54-3	1.80E+00	1.29E-02	2.58E-02
POM/Indeno(1,2,3-cd)pyrene	193-39-5	1.80E-06	1.29E-08	2.58E-08
Naphthalene	91-20-3	6.10E-04	4.37E-06	8.73E-06
POM/Phenanathrene	85-01-8	1.70E-05	1.22E-07	2.43E-07
POM/Pyrene	129-00-0	5.00E-06	3.58E-08	7.16E-08
Toluene	108-88-3	3.40E-03	2.43E-05	4.87E-05
Total POM			6.27E-07	1.25E-06
Total HAPs			1.35E-02	2.70E-02

Note 1: FROM AP-42 Fifth Edition, Supplement D, TABLE 1.4-2&3&4. 7/98 External Combustion Sources 1.4-9. Many emission factors < than specific value. In this case, specific value used to error on conservative side

EXAMPLE CALCULATIONS:
Maximum Hourly Emission = Max.hourly Fuel Usage rate (standard cubic feet hour) x (Pollutant E.F.)
Maximum Yearly Emission = Max.Hourly Emission Rate (lb/hr) x (Maximum Hours of Operation)

Form AI-S003(6) Supplement
Potential to Emit
Emissions Calculations
East Jordan Foundry, LLC

Flow Diagram Designation
MUA-8

Process Description:
MUA-8
Control Device: None

Natural Gas Combustion

Inputs

7.30296	= Max. Hourly Heat Input Rate (MMBtu/hr)
1020	= MMBtu/MMscf
7159.8	= Max. Hourly Fuel Usage Rate (standard cubic feet hour)
4000	= Maximum Operation (hours/year)
28.63906	= Maximum Annual Fuel Usage (MMscf)

POLLUTANT	CAS #	Note 1 Emission Factor (lb/10^6 scf)	Maximum Emissions (lbs/hr)	(tpy)
PM/PM10/PM2.5	n/a	7.6	0.05	1.09E-01
NOx	n/a	100.0	0.72	1.43E+00
CO	n/a	84.0	0.60	1.20E+00
Lead	n/a	0.0005	3.58E-06	7.16E-06
SO2	n/a	0.6	0.004	8.59E-03
VOC	n/a	5.5	0.04	7.88E-02
CO_2e	n/a	120,000	859.17	1.72E+03
Arsenic (As)	7440-38-2	2.00E-04	1.43E-06	2.86E-06
Beryllium (Be)	7440-41-7	1.20E-05	8.59E-08	1.72E-07
Cadmium (Cd)	7440-43-9	1.10E-03	7.88E-06	1.58E-05
Chromium (Cr)	7440-47-3	1.40E-03	1.00E-05	2.00E-05
Cobalt (Co)	7440-48-4	8.40E-05	6.01E-07	1.20E-06
Manganese (Mn)	7439-96-5	3.80E-04	2.72E-06	5.44E-06
Mercury (Hg)	7439-97-6	2.60E-04	1.86E-06	3.72E-06
Nickel (Ni)	7440-02-0	2.10E-03	1.50E-05	3.01E-05
Selenium (Se)	7782-49-2	2.40E-05	1.72E-07	3.44E-07
POM/2-Methylnaphthalene	91-57-6	2.40E-05	1.72E-07	3.44E-07
POM/3-Methylchloranthrene	56-49-5	1.80E-06	1.29E-08	2.58E-08
POM/7,12-Dimethylbenz(a)anthracene	57-97-6	1.60E-05	1.15E-07	2.29E-07
POM/Acenaphthene	83-32-9	1.80E-06	1.29E-08	2.58E-08
POM/Acenaphthylene	203-96-8	1.80E-06	1.29E-08	2.58E-08
POM/Anthracene	120-12-7	2.40E-06	1.72E-08	3.44E-08
POM/Benz(a)anthracene	56-55-3	1.80E-06	1.29E-08	2.58E-08
Benzene	71-43-2	2.10E-03	1.50E-05	3.01E-05
POM/Benzo(a)pyrene	50-32-8	1.20E-06	8.59E-09	1.72E-08
POM/Benzo(b)fluoranthene	205-99-2	1.20E-06	8.59E-09	1.72E-08
POM/Benzo(g,h,i)perylene	191-24-2	1.20E-06	8.59E-09	1.72E-08
POM/Benzo(k)fluoranthene	205-82-3	1.80E-06	1.29E-08	2.58E-08
POM/Chrysene	218-01-9	1.80E-06	1.29E-08	2.58E-08
POM/Dibenzo(a,h)anthracene	53-70-3	1.20E-06	8.59E-09	1.72E-08
Dichlorobenzene	25321-22-6	1.20E-03	8.59E-06	1.72E-05
POM/Fluoranthene	206-44-0	3.00E-06	2.15E-08	4.30E-08
POM/Fluorene	86-73-7	2.80E-06	2.00E-08	4.01E-08
Formaldehyde	50-00-0	7.50E-02	5.37E-04	1.07E-03
Hexane	110-54-3	1.80E+00	1.29E-02	2.58E-02
POM/Indeno(1,2,3-cd)pyrene	193-39-5	1.80E-06	1.29E-08	2.58E-08
Naphthalene	91-20-3	6.10E-04	4.37E-06	8.73E-06
POM/Phenanathrene	85-01-8	1.70E-05	1.22E-07	2.43E-07
POM/Pyrene	129-00-0	5.00E-06	3.58E-08	7.16E-08
Toluene	108-88-3	3.40E-03	2.43E-05	4.87E-05
Total POM			6.27E-07	1.25E-06
Total HAPs			1.35E-02	2.70E-02

Note 1: FROM AP-42 Fifth Edition, Supplement D, TABLE 1.4-2&3&4. 7/98 External Combustion Sources 1.4-9. Many emission factors < than specific value. In this case, specific value used to error on conservative side

EXAMPLE CALCULATIONS:
Maximum Hourly Emission = Max.hourly Fuel Usage rate (standard cubic feet hour) x (Pollutant E.F.)
Maximum Yearly Emission = Max.Hourly Emission Rate (lb/hr) x (Maximum Hours of Operation)

Form AI-S003(6) Supplement
Potential to Emit
Emissions Calculations
East Jordan Foundry, LLC

Flow Diagram Designation
MUA-9

Process Description:
MUA-9
Control Device: None

Natural Gas Combustion

Inputs

7.30296	= Max. Hourly Heat Input Rate (MMBtu/hr)
1020	= MMBtu/MMscf
7159.8	= Max. Hourly Fuel Usage Rate (standard cubic feet hour)
4000	= Maximum Operation (hours/year)
28.63906	= Maximum Annual Fuel Usage (MMscf)

POLLUTANT	CAS #	Note 1 Emission Factor ($lb/10^6$ scf)	Maximum Emissions (lbs/hr)	(tpy)
PM/PM10/PM2.5	n/a	7.6	0.05	1.09E-01
NOx	n/a	100.0	0.72	1.43E+00
CO	n/a	84.0	0.60	1.20E+00
Lead	n/a	0.0005	3.58E-06	7.16E-06
SO2	n/a	0.6	0.004	8.59E-03
VOC	n/a	5.5	0.04	7.88E-02
CO_2e	n/a	120,000	859.17	1.72E+03
Arsenic (As)	7440-38-2	2.00E-04	1.43E-06	2.86E-06
Beryllium (Be)	7440-41-7	1.20E-05	8.59E-08	1.72E-07
Cadmium (Cd)	7440-43-9	1.10E-03	7.88E-06	1.58E-05
Chromium (Cr)	7440-47-3	1.40E-03	1.00E-05	2.00E-05
Cobalt (Co)	7440-48-4	8.40E-05	6.01E-07	1.20E-06
Manganese (Mn)	7439-96-5	3.80E-04	2.72E-06	5.44E-06
Mercury (Hg)	7439-97-6	2.60E-04	1.86E-06	3.72E-06
Nickel (Ni)	7440-02-0	2.10E-03	1.50E-05	3.01E-05
Selenium (Se)	7782-49-2	2.40E-05	1.72E-07	3.44E-07
POM/2-Methylnaphthalene	91-57-6	2.40E-05	1.72E-07	3.44E-07
POM/3-Methylchloranthrene	56-49-5	1.80E-06	1.29E-08	2.58E-08
POM/7,12-Dimethylbenz(a)anthracene	57-97-6	1.60E-05	1.15E-07	2.29E-07
POM/Acenaphthene	83-32-9	1.80E-06	1.29E-08	2.58E-08
POM/Acenaphthylene	203-96-8	1.80E-06	1.29E-08	2.58E-08
POM/Anthracene	120-12-7	2.40E-06	1.72E-08	3.44E-08
POM/Benz(a)anthracene	56-55-3	1.80E-06	1.29E-08	2.58E-08
Benzene	71-43-2	2.10E-03	1.50E-05	3.01E-05
POM/Benzo(a)pyrene	50-32-8	1.20E-06	8.59E-09	1.72E-08
POM/Benzo(b)fluoranthene	205-99-2	1.20E-06	8.59E-09	1.72E-08
POM/Benzo(g,h,i)perylene	191-24-2	1.20E-06	8.59E-09	1.72E-08
POM/Benzo(k)fluoranthene	205-82-3	1.80E-06	1.29E-08	2.58E-08
POM/Chrysene	218-01-9	1.80E-06	1.29E-08	2.58E-08
POM/Dibenzo(a,h)anthracene	53-70-3	1.20E-06	8.59E-09	1.72E-08
Dichlorobenzene	25321-22-6	1.20E-03	8.59E-06	1.72E-05
POM/Fluoranthene	206-44-0	3.00E-06	2.15E-08	4.30E-08
POM/Fluorene	86-73-7	2.80E-06	2.00E-08	4.01E-08
Formaldehyde	50-00-0	7.50E-02	5.37E-04	1.07E-03
Hexane	110-54-3	1.80E+00	1.29E-02	2.58E-02
POM/Indeno(1,2,3-cd)pyrene	193-39-5	1.80E-06	1.29E-08	2.58E-08
Naphthalene	91-20-3	6.10E-04	4.37E-06	8.73E-06
POM/Phenanathrene	85-01-8	1.70E-05	1.22E-07	2.43E-07
POM/Pyrene	129-00-0	5.00E-06	3.58E-08	7.16E-08
Toluene	108-88-3	3.40E-03	2.43E-05	4.87E-05
Total POM			6.27E-07	1.25E-06
Total HAPs			1.35E-02	2.70E-02

Note 1: FROM AP-42 Fifth Edition, Supplement D, TABLE 1.4-2&3&4. 7/98 External Combustion Sources 1.4-9. Many emission factors < than specific value. In this case, specific value used to error on conservative side

EXAMPLE CALCULATIONS:
Maximum Hourly Emission = Max.hourly Fuel Usage rate (standard cubic feet hour) x (Pollutant E.F.)
Maximum Yearly Emission = Max.Hourly Emission Rate (lb/hr) x (Maximum Hours of Operation)

Form AI-S003(6) Supplement
Potential to Emit
Emissions Calculations
East Jordan Foundry, LLC

Flow Diagram Designation
MUA-10

Process Description:
MUA-10
Control Device: None

Natural Gas Combustion

Inputs

5.47722	= Max. Hourly Heat Input Rate (MMBtu/hr)
1020	= MMBtu/MMscf
5369.8	= Max. Hourly Fuel Usage Rate (standard cubic feet hour)
4000	= Maximum Operation (hours/year)
21.47929	= Maximum Annual Fuel Usage (MMscf)

POLLUTANT	CAS #	Note 1 Emission Factor ($lb/10^6$ scf)	Maximum Emissions (lbs/hr)	(tpy)
PM/PM10/PM2.5	n/a	7.6	0.04	8.16E-02
NOx	n/a	100.0	0.54	1.07E+00
CO	n/a	84.0	0.45	9.02E-01
Lead	n/a	0.0005	2.68E-06	5.37E-06
SO2	n/a	0.6	0.003	6.44E-03
VOC	n/a	5.5	0.03	5.91E-02
CO_2e	n/a	120,000	644.38	1.29E+03
Arsenic (As)	7440-38-2	2.00E-04	1.07E-06	2.15E-06
Beryllium (Be)	7440-41-7	1.20E-05	6.44E-08	1.29E-07
Cadmium (Cd)	7440-43-9	1.10E-03	5.91E-06	1.18E-05
Chromium (Cr)	7440-47-3	1.40E-03	7.52E-06	1.50E-05
Cobalt (Co)	7440-48-4	8.40E-05	4.51E-07	9.02E-07
Manganese (Mn)	7439-96-5	3.80E-04	2.04E-06	4.08E-06
Mercury (Hg)	7439-97-6	2.60E-04	1.40E-06	2.79E-06
Nickel (Ni)	7440-02-0	2.10E-03	1.13E-05	2.26E-05
Selenium (Se)	7782-49-2	2.40E-05	1.29E-07	2.58E-07
POM/2-Methylnaphthalene	91-57-6	2.40E-05	1.29E-07	2.58E-07
POM/3-Methylchloranthrene	56-49-5	1.80E-06	9.67E-09	1.93E-08
POM/7,12-Dimethylbenz(a)anthracene	57-97-6	1.60E-05	8.59E-08	1.72E-07
POM/Acenaphthene	83-32-9	1.80E-06	9.67E-09	1.93E-08
POM/Acenaphthylene	203-96-8	1.80E-06	9.67E-09	1.93E-08
POM/Anthracene	120-12-7	2.40E-06	1.29E-08	2.58E-08
POM/Benz(a)anthracene	56-55-3	1.80E-06	9.67E-09	1.93E-08
Benzene	71-43-2	2.10E-03	1.13E-05	2.26E-05
POM/Benzo(a)pyrene	50-32-8	1.20E-06	6.44E-09	1.29E-08
POM/Benzo(b)fluoranthene	205-99-2	1.20E-06	6.44E-09	1.29E-08
POM/Benzo(g,h,i)perylene	191-24-2	1.20E-06	6.44E-09	1.29E-08
POM/Benzo(k)fluoranthene	205-82-3	1.80E-06	9.67E-09	1.93E-08
POM/Chrysene	218-01-9	1.80E-06	9.67E-09	1.93E-08
POM/Dibenzo(a,h)anthracene	53-70-3	1.20E-06	6.44E-09	1.29E-08
Dichlorobenzene	25321-22-6	1.20E-03	6.44E-06	1.29E-05
POM/Fluoranthene	206-44-0	3.00E-06	1.61E-08	3.22E-08
POM/Fluorene	86-73-7	2.80E-06	1.50E-08	3.01E-08
Formaldehyde	50-00-0	7.50E-02	4.03E-04	8.05E-04
Hexane	110-54-3	1.80E+00	9.67E-03	1.93E-02
POM/Indeno(1,2,3-cd)pyrene	193-39-5	1.80E-06	9.67E-09	1.93E-08
Naphthalene	91-20-3	6.10E-04	3.28E-06	6.55E-06
POM/Phenanathrene	85-01-8	1.70E-05	9.13E-08	1.83E-07
POM/Pyrene	129-00-0	5.00E-06	2.68E-08	5.37E-08
Toluene	108-88-3	3.40E-03	1.83E-05	3.65E-05
Total POM			4.70E-07	9.41E-07
Total HAPs			1.01E-02	2.03E-02

Note 1: FROM AP-42 Fifth Edition, Supplement D, TABLE 1.4-2&3&4. 7/98 External Combustion Sources 1.4-9. Many emission factors < than specific value. In this case, specific value used to error on conservative side

EXAMPLE CALCULATIONS:
Maximum Hourly Emission = Max.hourly Fuel Usage rate (standard cubic feet hour) x (Pollutant E.F.)
Maximum Yearly Emission = Max.Hourly Emission Rate (lb/hr) x (Maximum Hours of Operation)

Form AI-S003(6) Supplement
Potential to Emit
Emissions Calculations
East Jordan Foundry, LLC

Flow Diagram Designation
MUA-11

Process Description:
MUA-11
Control Device: None

Natural Gas Combustion

Inputs

5.47722	= Max. Hourly Heat Input Rate (MMBtu/hr)
1020	= MMBtu/MMscf
5369.8	= Max. Hourly Fuel Usage Rate (standard cubic feet hour)
4000	= Maximum Operation (hours/year)
21.47929	= Maximum Annual Fuel Usage (MMscf)

POLLUTANT	CAS #	Note 1 Emission Factor ($lb/10^6$ scf)	Maximum Emissions (lbs/hr)	(tpy)
PM/PM10/PM2.5	n/a	7.6	0.04	8.16E-02
NOx	n/a	100.0	0.54	1.07E+00
CO	n/a	84.0	0.45	9.02E-01
Lead	n/a	0.0005	2.68E-06	5.37E-06
SO2	n/a	0.6	0.003	6.44E-03
VOC	n/a	5.5	0.03	5.91E-02
CO_2e	n/a	120,000	644.38	1.29E+03
Arsenic (As)	7440-38-2	2.00E-04	1.07E-06	2.15E-06
Beryllium (Be)	7440-41-7	1.20E-05	6.44E-08	1.29E-07
Cadmium (Cd)	7440-43-9	1.10E-03	5.91E-06	1.18E-05
Chromium (Cr)	7440-47-3	1.40E-03	7.52E-06	1.50E-05
Cobalt (Co)	7440-48-4	8.40E-05	4.51E-07	9.02E-07
Manganese (Mn)	7439-96-5	3.80E-04	2.04E-06	4.08E-06
Mercury (Hg)	7439-97-6	2.60E-04	1.40E-06	2.79E-06
Nickel (Ni)	7440-02-0	2.10E-03	1.13E-05	2.26E-05
Selenium (Se)	7782-49-2	2.40E-05	1.29E-07	2.58E-07
POM/2-Methylnaphthalene	91-57-6	2.40E-05	1.29E-07	2.58E-07
POM/3-Methylchloranthrene	56-49-5	1.80E-06	9.67E-09	1.93E-08
POM/7,12-Dimethylbenz(a)anthracene	57-97-6	1.60E-05	8.59E-08	1.72E-07
POM/Acenaphthene	83-32-9	1.80E-06	9.67E-09	1.93E-08
POM/Acenaphthylene	203-96-8	1.80E-06	9.67E-09	1.93E-08
POM/Anthracene	120-12-7	2.40E-06	1.29E-08	2.58E-08
POM/Benz(a)anthracene	56-55-3	1.80E-06	9.67E-09	1.93E-08
Benzene	71-43-2	2.10E-03	1.13E-05	2.26E-05
POM/Benzo(a)pyrene	50-32-8	1.20E-06	6.44E-09	1.29E-08
POM/Benzo(b)fluoranthene	205-99-2	1.20E-06	6.44E-09	1.29E-08
POM/Benzo(g,h,i)perylene	191-24-2	1.20E-06	6.44E-09	1.29E-08
POM/Benzo(k)fluoranthene	205-82-3	1.80E-06	9.67E-09	1.93E-08
POM/Chrysene	218-01-9	1.80E-06	9.67E-09	1.93E-08
POM/Dibenzo(a,h)anthracene	53-70-3	1.20E-06	6.44E-09	1.29E-08
Dichlorobenzene	25321-22-6	1.20E-03	6.44E-06	1.29E-05
POM/Fluoranthene	206-44-0	3.00E-06	1.61E-08	3.22E-08
POM/Fluorene	86-73-7	2.80E-06	1.50E-08	3.01E-08
Formaldehyde	50-00-0	7.50E-02	4.03E-04	8.05E-04
Hexane	110-54-3	1.80E+00	9.67E-03	1.93E-02
POM/Indeno(1,2,3-cd)pyrene	193-39-5	1.80E-06	9.67E-09	1.93E-08
Naphthalene	91-20-3	6.10E-04	3.28E-06	6.55E-06
POM/Phenanathrene	85-01-8	1.70E-05	9.13E-08	1.83E-07
POM/Pyrene	129-00-0	5.00E-06	2.68E-08	5.37E-08
Toluene	108-88-3	3.40E-03	1.83E-05	3.65E-05
Total POM			4.70E-07	9.41E-07
Total HAPs			1.01E-02	2.03E-02

Note 1: FROM AP-42 Fifth Edition, Supplement D, TABLE 1.4-2&3&4. 7/98 External Combustion Sources 1.4-9. Many emission factors < than specific value. In this case, specific value used to error on conservative side

EXAMPLE CALCULATIONS:
Maximum Hourly Emission = Max.hourly Fuel Usage rate (standard cubic feet hour) x (Pollutant E.F.)
Maximum Yearly Emission = Max.Hourly Emission Rate (lb/hr) x (Maximum Hours of Operation)

Form AI-S003(6) Supplement
Potential to Emit
Emissions Calculations
East Jordan Foundry, LLC

Flow Diagram Designation
Various NG Sources

Process Description:
Various NG Sources
Control Device: None

Natural Gas Combustion

Inputs

4.656	= Max. Hourly Heat Input Rate (MMBtu/hr)
1020	= MMBtu/MMscf
4564.7	= Max. Hourly Fuel Usage Rate (standard cubic feet hour)
6000	= Maximum Operation (hours/year)
27.38824	= Maximum Annual Fuel Usage (MMscf)

POLLUTANT	CAS #	Note 1 Emission Factor (lb/10^6 scf)	Maximum Emissions (lbs/hr)	(tpy)
PM/PM10/PM2.5	n/a	7.6	0.03	1.04E-01
NOx	n/a	100.0	0.46	1.37E+00
CO	n/a	84.0	0.38	1.15E+00
Lead	n/a	0.0005	2.28E-06	6.85E-06
SO2	n/a	0.6	0.003	8.22E-03
VOC	n/a	5.5	0.03	7.53E-02
CO_2e	n/a	120,000	547.76	1.64E+03
Arsenic (As)	7440-38-2	2.00E-04	9.13E-07	2.74E-06
Beryllium (Be)	7440-41-7	1.20E-05	5.48E-08	1.64E-07
Cadmium (Cd)	7440-43-9	1.10E-03	5.02E-06	1.51E-05
Chromium (Cr)	7440-47-3	1.40E-03	6.39E-06	1.92E-05
Cobalt (Co)	7440-48-4	8.40E-05	3.83E-07	1.15E-06
Manganese (Mn)	7439-96-5	3.80E-04	1.73E-06	5.20E-06
Mercury (Hg)	7439-97-6	2.60E-04	1.19E-06	3.56E-06
Nickel (Ni)	7440-02-0	2.10E-03	9.59E-06	2.88E-05
Selenium (Se)	7782-49-2	2.40E-05	1.10E-07	3.29E-07
POM/2-Methylnaphthalene	91-57-6	2.40E-05	1.10E-07	3.29E-07
POM/3-Methylchloranthrene	56-49-5	1.80E-06	8.22E-09	2.46E-08
POM/7,12-Dimethylbenz(a)anthracene	57-97-6	1.60E-05	7.30E-08	2.19E-07
POM/Acenaphthene	83-32-9	1.80E-06	8.22E-09	2.46E-08
POM/Acenaphthylene	203-96-8	1.80E-06	8.22E-09	2.46E-08
POM/Anthracene	120-12-7	2.40E-06	1.10E-08	3.29E-08
POM/Benz(a)anthracene	56-55-3	1.80E-06	8.22E-09	2.46E-08
Benzene	71-43-2	2.10E-03	9.59E-06	2.88E-05
POM/Benzo(a)pyrene	50-32-8	1.20E-06	5.48E-09	1.64E-08
POM/Benzo(b)fluoranthene	205-99-2	1.20E-06	5.48E-09	1.64E-08
POM/Benzo(g,h,i)perylene	191-24-2	1.20E-06	5.48E-09	1.64E-08
POM/Benzo(k)fluoranthene	205-82-3	1.80E-06	8.22E-09	2.46E-08
POM/Chrysene	218-01-9	1.80E-06	8.22E-09	2.46E-08
POM/Dibenzo(a,h)anthracene	53-70-3	1.20E-06	5.48E-09	1.64E-08
Dichlorobenzene	25321-22-6	1.20E-03	5.48E-06	1.64E-05
POM/Fluoranthene	206-44-0	3.00E-06	1.37E-08	4.11E-08
POM/Fluorene	86-73-7	2.80E-06	1.28E-08	3.83E-08
Formaldehyde	50-00-0	7.50E-02	3.42E-04	1.03E-03
Hexane	110-54-3	1.80E+00	8.22E-03	2.46E-02
POM/Indeno(1,2,3-cd)pyrene	193-39-5	1.80E-06	8.22E-09	2.46E-08
Naphthalene	91-20-3	6.10E-04	2.78E-06	8.35E-06
POM/Phenanathrene	85-01-8	1.70E-05	7.76E-08	2.33E-07
POM/Pyrene	129-00-0	5.00E-06	2.28E-08	6.85E-08
Toluene	108-88-3	3.40E-03	1.55E-05	4.66E-05
Total POM			4.00E-07	1.20E-06
Total HAPs			8.62E-03	2.59E-02

Note 1: FROM AP-42 Fifth Edition, Supplement D, TABLE 1.4-2&3&4. 7/98 External Combustion Sources 1.4-9. Many emission factors < than specific value. In this case, specific value used to error on conservative side

EXAMPLE CALCULATIONS:
Maximum Hourly Emission = Max.hourly Fuel Usage rate (standard cubic feet hour) x (Pollutant E.F.)
Maximum Yearly Emission = Max.Hourly Emission Rate (lb/hr) x (Maximum Hours of Operation)

Form AI-S003(6) Supplement
Potential to Emit
Emissions Calculations
East Jordan Foundry, LLC

Flow Diagram Designation
EG-1

Process Description:
EG-1
Control Device:

Natural Gas Combustion

	Inputs	
Note 2	459.0	= Rating of Generator (hp)
	300.0	= Rating of Generator (KW)
	7000	= Brake Specific Fuel Consumption Btu/hp-hr (AP-42 Table 3.3-1, footnote a)
	3.2130	= Max. Hourly Heat Input Rate (MMBtu/hr)
	150.0	= Maximum Operation (hours/year)

POLLUTANT	CAS #	Note 1 Emission Factor (lb/MMBtu) Fuel Input	Maximum Emissions (lbs/hr)	Maximum Emissions (tpy)
PM	n/a	0.0099	0.032	0.002
PM10/PM2.5	n/a	0.0095	0.031	0.002
NOx	n/a	2.27	7.294	0.547
CO	n/a	3.72	11.952	0.896
Lead	n/a			
SO2	n/a	0.0006	0.002	0.000
VOC	n/a	0.0296	0.095	0.007
CO_2	n/a	110	353.43	26.51
N_2O	n/a			
Methane	n/a	0.23	0.74	0.06
CO_2e	n/a	115.75	371.9	27.89
1,1,2-Trichloroethane	79-00-5	ND	ND	ND
1,3-Butadiene	106-99-0	6.63E-04	2.13E-03	1.60E-04
1,3-Dichloropropene	542-75-6	ND	ND	ND
Acetaldehyde	75-07-0	2.79E-03	8.96E-03	6.72E-04
Acrolein	107-02-8	2.63E-03	8.45E-03	6.34E-04
Benzene	71-43-2	1.58E-03	5.08E-03	3.81E-04
Carbon Tetrachloride	56-23-5	ND	ND	ND
Chlorobenzene	108-90-7	ND	ND	ND
Chloroform	67-66-3	ND	ND	ND
Ethylbenzene	100-41-4	ND	ND	ND
Ethylene Dibromide (Dibromoethane)	106-93-4	ND	ND	ND
Ethylene Dichloride (1,2-Dichloroethane)	107-06-2	ND	ND	ND
Ethylidene Dichloride (1,1-Dichloroethane)	75-34-3	ND	ND	ND
Formaldehyde	50-00-0	2.05E-02	6.59E-02	4.94E-03
Methanol	67-56-1	3.06E-03	9.83E-03	7.37E-04
Methyl Chloride (Chloromethane)	74-87-3	4.12E-05	1.32E-04	9.93E-06
Naphthalene	91-20-3	9.71E-05	3.12E-04	2.34E-05
PAH	n/a	1.41E-04	4.53E-04	3.40E-05
Propylene Dichloride (1,2-Dichloropropane)	78-87-5	ND	ND	ND
Styrene	100-42-5	1.19E-05	3.82E-05	2.87E-06
Toluene	108-88-3	5.58E-04	1.79E-03	1.34E-04
Vinyl Chloride	75-01-4	ND	ND	ND
Xylenes (isomers and mixture)	1330-20-7	1.95E-04	6.27E-04	4.70E-05
Total HAPs			1.04E-01	7.78E-03

Note 1: FROM AP-42 Fifth Edition, Supplement F, Ch. 3.2 TABLE 3.2-3. 8/2000. Many emission factors < than detectable value, these emission factors are represented as undetectable (ND).
Note 2: Manufacturer spec sheet

Maximum Hourly Emission = Max.hourly Fuel Usage rate (standard cubic feet hour) x (Pollutant E.F.)
Maximum Yearly Emission = Max.Hourly Emission Rate (lb/hr) x (Maximum Hours of Operation)

Form AI-S003(6) Supplement
Potential to Emit
Emissions Calculations
East Jordan Foundry, LLC

Flow Diagram Designation
EG-2

Process Description:
EG-2
Control Device:

Natural Gas Combustion

	Inputs	
Note 2	459.0	= Rating of Generator (hp)
	300.0	= Rating of Generator (KW)
	7000	= Brake Specific Fuel Consumption Btu/hp-hr (AP-42 Table 3.3-1, footnote a)
	3.2130	= Max. Hourly Heat Input Rate (MMBtu/hr)
	150.0	= Maximum Operation (hours/year)

POLLUTANT	CAS #	Note 1 Emission Factor (lb/MMBtu) Fuel Input	Maximum Emissions (lbs/hr)	Maximum Emissions (tpy)
PM	n/a	0.0099	0.032	0.002
PM10/PM2.5	n/a	0.0095	0.031	0.002
NOx	n/a	2.27	7.294	0.547
CO	n/a	3.72	11.952	0.896
Lead	n/a			
SO2	n/a	0.0006	0.002	0.000
VOC	n/a	0.0296	0.095	0.007
CO_2	n/a	110	353.43	26.51
N_2O	n/a			
Methane	n/a	0.23	0.74	0.06
CO_2e	n/a	115.75	371.9	27.89
1,1,2-Trichloroethane	79-00-5	ND	ND	ND
1,3-Butadiene	106-99-0	6.63E-04	2.13E-03	1.60E-04
1,3-Dichloropropene	542-75-6	ND	ND	ND
Acetaldehyde	75-07-0	2.79E-03	8.96E-03	6.72E-04
Acrolein	107-02-8	2.63E-03	8.45E-03	6.34E-04
Benzene	71-43-2	1.58E-03	5.08E-03	3.81E-04
Carbon Tetrachloride	56-23-5	ND	ND	ND
Chlorobenzene	108-90-7	ND	ND	ND
Chloroform	67-66-3	ND	ND	ND
Ethylbenzene	100-41-4	ND	ND	ND
Ethylene Dibromide (Dibromoethane)	106-93-4	ND	ND	ND
Ethylene Dichloride (1,2-Dichloroethane)	107-06-2	ND	ND	ND
Ethylidene Dichloride (1,1-Dichloroethane)	75-34-3	ND	ND	ND
Formaldehyde	50-00-0	2.05E-02	6.59E-02	4.94E-03
Methanol	67-56-1	3.06E-03	9.83E-03	7.37E-04
Methyl Chloride (Chloromethane)	74-87-3	4.12E-05	1.32E-04	9.93E-06
Naphthalene	91-20-3	9.71E-05	3.12E-04	2.34E-05
PAH	n/a	1.41E-04	4.53E-04	3.40E-05
Propylene Dichloride (1,2-Dichloropropane)	78-87-5	ND	ND	ND
Styrene	100-42-5	1.19E-05	3.82E-05	2.87E-06
Toluene	108-88-3	5.58E-04	1.79E-03	1.34E-04
Vinyl Chloride	75-01-4	ND	ND	ND
Xylenes (isomers and mixture)	1330-20-7	1.95E-04	6.27E-04	4.70E-05
Total HAPs			1.04E-01	7.78E-03

Note 1: FROM AP-42 Fifth Edition, Supplement F, Ch. 3.2 TABLE 3.2-3. 8/2000. Many emission factors < than detectable value, these emission factors are represented as undetectable (ND).
Note 2: Manufacturer spec sheet

Maximum Hourly Emission = Max.hourly Fuel Usage rate (standard cubic feet hour) x (Pollutant E.F.)
Maximum Yearly Emission = Max.Hourly Emission Rate (lb/hr) x (Maximum Hours of Operation)

Form AI-S-003(6) Supplement
Actual Estimated - CY2019
HAPs Emissions Summary
East Jordan Foundry, LLC

Hazardous Air Pollutant Emissions Summary

Pollutant	CAS #	EIF Melting (tpy)	In-Duct Burners (tpy)	Ladle Heaters (tpy)	Total Pouring Operations (tpy)	LMI Pouring Operations (tpy)	1230 Pouring Operations (tpy)	Total Mold Cooling Operations (tpy)	LMI Mold Cooling Operations (tpy)	1230 Mold Cooling Operations (tpy)	Total Shakeout Operations (tpy)	LMI Shakeout (tpy)	1230 Shakeout (tpy)	Shell Coremaking (tpy)	Shell Core NG (tpy)	PUCB Coremaking (tpy)	Mold & Core Room Chemicals (tpy)	Asphaltic Dip Tank Post Heater (tpy)
Antimony (Sb)	7440-36-0							1.09E-05			6.64E-06							
Arsenic (As)	7440-38-2		1.60E-07	2.99E-06	3.97E-06										3.10E-07			3.80E-07
Beryllium (Be)	7440-41-7		9.60E-09	1.79E-07											1.86E-08			2.28E-08
Cadmium (Cd)	7440-43-9		8.80E-07	1.64E-05	3.07E-06			7.65E-06			1.46E-05				1.71E-06			2.09E-06
Chromium (Cr)	7440-47-3	0.008	1.12E-06	2.09E-05	2.34E-05			5.46E-05			2.63E-04				2.17E-06			2.66E-06
Cobalt (Co)	7440-48-4		6.72E-08	1.26E-06	1.79E-03			3.01E-05			2.18E-04				1.30E-07			1.60E-07
Lead (Pb)	7439-92-1	0.003	4.00E-07	7.48E-06											7.75E-07			9.50E-07
Manganese (Mn)	7439-96-5	0.019	3.04E-07	5.68E-06	7.11E-04			1.96E-04			6.54E-04				5.89E-07			7.22E-07
Mercury (Hg)	7439-97-6		2.08E-07	3.89E-06											4.03E-07			4.94E-07
Nickel (Ni)	7440-02-0	0.003	1.68E-06	3.14E-05				7.56E-05			5.83E-04				3.26E-06			3.99E-06
Selenium (Se)	7782-49-2		1.92E-08	3.59E-07											3.72E-08			4.56E-08
1,2,4 Trimethylbenzene	95-63-3															0.029		
1,3-Butadiene	106-99-0																	
Acetaldehyde	75-07-0				7.32E-03			7.53E-02			1.01E+00						0.0000	
Acrolein	107-02-8																	
Dimethylnaphthalenes	28804-88-8																	
Cresol	1319-77-3																	
Methylnaphthalenes	90-12-0																	
Propionaldehyde	123-38-6							9.94E-04			9.98E-02							
Methylene diphenyl diisocyanate (MDI)	101-68-8																	
4,4-methylenedianiline (MBA)	101-77-9																	
Formaldehyde	50-00-0		6.00E-05	1.12E-03	4.57E-03			4.67E-02			4.50E-01			0.069	1.16E-04			1.43E-04
Cumene	98-82-8				2.33E-04			3.36E-03			6.69E-03					0.002		
Benzene	71-43-2		1.68E-06	3.14E-05	6.09E-02			7.93E-01			4.69E-01				3.26E-06			3.99E-06
O-Xylene	95-47-6				4.73E-03			8.63E-02			9.31E-02							
M-Xylene	108-38-3				1.07E-02			1.67E-01			2.19E-01							
Methanol	67-56-1																0.000	
Methyl Chloride	74-87-3																	
Phenol	108-95-2				8.05E-03			1.51E-01			4.90E-01			0.276				
Naphthalene	91-20-3		4.88E-07	9.12E-06	4.76E-03			6.78E-02			1.47E-01				9.46E-07	0.044		1.16E-06
Ethyl Benzene	100-41-4				2.42E-03			4.10E-02			5.09E-02							
Hydrogen Flouride	7664-39-3																	
Toluene	108-88-3		2.72E-06	5.08E-05	2.66E-02			4.27E-01			3.87E-01				5.27E-06			6.46E-06
P-Xylene	106-42-3																	
Hexane	110-54-3		1.44E-03	2.69E-02											2.79E-03			3.42E-03
Xylenes	1330-20-7				1.54E-02			2.54E-01			3.12E-01							
POM/2-Methylnaphthalene	91-57-6		1.92E-08	3.59E-07											3.72E-08			4.56E-08
POM/3-Methylchloranthrene	56-49-5		1.44E-09	2.69E-08											2.79E-09			3.42E-09
POM/7,12-Dimethylbenz(a)anthracene	57-97-6		1.28E-08	2.39E-07											2.48E-08			3.04E-08
POM/Acenaphthene	83-32-9		1.44E-09	2.69E-08											2.79E-09			3.42E-09
POM/Acenaphthylene	208-96-8		1.44E-09	2.69E-08											2.79E-09			3.42E-09
POM/Anthracene	120-12-7		1.92E-09	3.59E-08											3.72E-09			4.56E-09
POM/Benz(a)anthracene	56-55-3		1.44E-09	2.69E-08											2.79E-09			3.42E-09
POM/Benzo(a)pyrene	50-32-8		9.60E-10	1.79E-08											1.86E-09			2.28E-09
POM/Benzo(b)fluoranthene	205-99-2		9.60E-10	1.79E-08											1.86E-09			2.28E-09
POM/Benzo(g,h,i)perylene	191-24-2		9.60E-10	1.79E-08											1.86E-09			2.28E-09
POM/Benzo(k)fluoranthene	205-82-3		1.44E-09	2.69E-08											2.79E-09			3.42E-09
POM/Chrysene	218-01-9		1.44E-09	2.69E-08											2.79E-09			3.42E-09
POM/Dibenzo(a,h)anthracene	53-70-3		9.60E-10	1.79E-08											1.86E-09			2.28E-09
Dichlorobenzene	25321-22-6		9.60E-07	1.79E-05											1.86E-06			2.28E-06
POM/Fluoranthene	206-44-0		2.40E-09	4.49E-08											4.65E-09			5.70E-09
POM/Fluorene	86-73-7		2.24E-09	4.19E-08											4.34E-09			5.32E-09
POM/Indeno(1,2,3-cd)pyrene	193-39-5		1.44E-09	2.69E-08											2.79E-09			3.42E-09
POM/Phenanathrene	85-01-8		1.36E-08	2.54E-07											2.64E-08			3.23E-08
POM/Pyrene	129-00-0		4.00E-09	7.48E-08											7.75E-09			9.50E-09
o-Cresol	95-48-7				1.16E-04			2.64E-02			2.45E-01							
Styrene	100-42-5				1.45E-03			1.45E-02			8.42E-02							
Acetophenone	98-86-2							1.38E-02			1.39E-02							
Dibenzofurans	132-64-9							9.44E-04			5.85E-03							
Nitrobenzene	98-95-3							3.52E-04										
Diethylene Glycol	111-46-6																0.000	
Hydrotreated light silicon	64742-47-8																0.007	
Isopropyl Alcohol	67-63-0																	
High Molecular Wt. Silicon	63148-62-9																	
Total POMs			7.01E-08	1.31E-06											1.36E-07			1.66E-07
Total PAHs																		
Total HAPs		**0.033**	**0.002**	**0.028**	**0.134**			**1.917**			**3.775**			**0.345**	**0.003**	**0.075**	**0.000**	**0.004**

Form AI-S-003(6) Supplement
Actual Estimated - CY2019
HAPs Emissions Summary
East Jordan Foundry, LLC

Hazardous Air Pollutant Emissions Summ

Pollutant	MUA-1 (tpy)	MUA-2 (tpy)	MUA-3 (tpy)	MUA-4 (tpy)	MUA-5 (tpy)	MUA-6 (tpy)	MUA-7 (tpy)	MUA-8 (tpy)	MUA-9 (tpy)	MUA-10 (tpy)	MUA-11 (tpy)	Various NG Sources (tpy)	EG-1 (tpy)	EG-2 (tpy)	TOTAL HAPs/TACs (tpy)
Antimony (Sb)															1.75E-05
Arsenic (As)	7.70E-07	7.70E-07	7.70E-07	7.70E-07	7.70E-07	7.70E-07	7.70E-07	7.70E-07	7.70E-07	5.70E-07	5.70E-07	4.90E-07			1.64E-05
Beryllium (Be)	4.62E-08	4.62E-08	4.62E-08	4.62E-08	4.62E-08	4.62E-08	4.62E-08	4.62E-08	4.62E-08	3.42E-08	3.42E-08	2.94E-08			7.44E-07
Cadmium (Cd)	4.24E-06	4.24E-06	4.24E-06	4.24E-06	4.24E-06	4.24E-06	4.24E-06	4.24E-06	4.24E-06	3.14E-06	3.14E-06	2.70E-06			9.35E-05
Chromium (Cr)	5.39E-06	5.39E-06	5.39E-06	5.39E-06	5.39E-06	5.39E-06	5.39E-06	5.39E-06	5.39E-06	3.99E-06	3.99E-06	3.43E-06			8.47E-03
Cobalt (Co)	3.23E-07	3.23E-07	3.23E-07	3.23E-07	3.23E-07	3.23E-07	3.23E-07	3.23E-07	3.23E-07	2.39E-07	2.39E-07	2.06E-07			2.04E-03
Lead (Pb)	1.93E-06	1.93E-06	1.93E-06	1.93E-06	1.93E-06	1.93E-06	1.93E-06	1.93E-06	1.93E-06	1.43E-06	1.43E-06	1.23E-06			3.51E-03
Manganese (Mn)	1.46E-06	1.46E-06	1.46E-06	1.46E-06	1.46E-06	1.46E-06	1.46E-06	1.46E-06	1.46E-06	1.08E-06	1.08E-06	9.31E-07			2.03E-02
Mercury (Hg)	1.00E-06	1.00E-06	1.00E-06	1.00E-06	1.00E-06	1.00E-06	1.00E-06	1.00E-06	1.00E-06	7.41E-07	7.41E-07	6.37E-07			1.61E-05
Nickel (Ni)	8.09E-06	8.09E-06	8.09E-06	8.09E-06	8.09E-06	8.09E-06	8.09E-06	8.09E-06	8.09E-06	5.99E-06	5.99E-06	5.15E-06			3.47E-03
Selenium (Se)	9.24E-08	9.24E-08	9.24E-08	9.24E-08	9.24E-08	9.24E-08	9.24E-08	9.24E-08	9.24E-08	6.84E-08	6.84E-08	5.88E-08			1.49E-06
1,2,4 Trimethylbenzene															
1,3-Butadiene															
Acetaldehyde															1.09E+00
Acrolein															
Dimethylnaphthalenes															
Cresol															
Methylnaphthalenes															
Propionaldehyde															1.01E-01
Methylene diphenyl diisocyanate (MDI)															
4,4-methylenedianiline (MBA)															
Formaldehyde	2.89E-04	2.89E-04	2.89E-04	2.89E-04	2.89E-04	2.89E-04	2.89E-04	2.89E-04	2.89E-04	2.14E-04	2.14E-04	1.84E-04			5.75E-01
Cumene															1.25E-02
Benzene	8.09E-06	8.09E-06	8.09E-06	8.09E-06	8.09E-06	8.09E-06	8.09E-06	8.09E-06	8.09E-06	5.99E-06	5.99E-06	5.15E-06			1.32E+00
O-Xylene															1.84E-01
M-Xylene															3.97E-01
Methanol															7.20E-05
Methyl Chloride															
Phenol															9.26E-01
Naphthalene	2.35E-06	2.35E-06	2.35E-06	2.35E-06	2.35E-06	2.35E-06	2.35E-06	2.35E-06	2.35E-06	1.74E-06	1.74E-06	1.49E-06			2.63E-01
Ethyl Benzene															9.43E-02
Hydrogen Flouride															
Toluene	1.31E-05	1.31E-05	1.31E-05	1.31E-05	1.31E-05	1.31E-05	1.31E-05	1.31E-05	1.31E-05	9.69E-06	9.69E-06	8.33E-06			8.41E-01
P-Xylene															
Hexane	6.93E-03	6.93E-03	6.93E-03	6.93E-03	6.93E-03	6.93E-03	6.93E-03	6.93E-03	6.93E-03	5.13E-03	5.13E-03	4.41E-03			1.12E-01
Xylenes															5.81E-01
POM/2-Methylnaphthalene	9.24E-08	9.24E-08	9.24E-08	9.24E-08	9.24E-08	9.24E-08	9.24E-08	9.24E-08	9.24E-08	6.84E-08	6.84E-08	5.88E-08			1.49E-06
POM/3-Methylchloranthrene	6.93E-09	6.93E-09	6.93E-09	6.93E-09	6.93E-09	6.93E-09	6.93E-09	6.93E-09	6.93E-09	5.13E-09	5.13E-09	4.41E-09			1.12E-07
POM/7,12-Dimethylbenz(a)anthracene	6.16E-08	6.16E-08	6.16E-08	6.16E-08	6.16E-08	6.16E-08	6.16E-08	6.16E-08	6.16E-08	4.56E-08	4.56E-08	3.92E-08			9.92E-07
POM/Acenaphthene	6.93E-09	6.93E-09	6.93E-09	6.93E-09	6.93E-09	6.93E-09	6.93E-09	6.93E-09	6.93E-09	5.13E-09	5.13E-09	4.41E-09			1.12E-07
POM/Acenaphthylene	6.93E-09	6.93E-09	6.93E-09	6.93E-09	6.93E-09	6.93E-09	6.93E-09	6.93E-09	6.93E-09	5.13E-09	5.13E-09	4.41E-09			1.12E-07
POM/Anthracene	9.24E-09	9.24E-09	9.24E-09	9.24E-09	9.24E-09	9.24E-09	9.24E-09	9.24E-09	9.24E-09	6.84E-09	6.84E-09	5.88E-09			1.49E-07
POM/Benz(a)anthracene	6.93E-09	6.93E-09	6.93E-09	6.93E-09	6.93E-09	6.93E-09	6.93E-09	6.93E-09	6.93E-09	5.13E-09	5.13E-09	4.41E-09			1.12E-07
POM/Benzo(a)pyrene	4.62E-09	4.62E-09	4.62E-09	4.62E-09	4.62E-09	4.62E-09	4.62E-09	4.62E-09	4.62E-09	3.42E-09	3.42E-09	2.94E-09			7.44E-08
POM/Benzo(b)fluoranthene	4.62E-09	4.62E-09	4.62E-09	4.62E-09	4.62E-09	4.62E-09	4.62E-09	4.62E-09	4.62E-09	3.42E-09	3.42E-09	2.94E-09			7.44E-08
POM/Benzo(g,h,i)perylene	4.62E-09	4.62E-09	4.62E-09	4.62E-09	4.62E-09	4.62E-09	4.62E-09	4.62E-09	4.62E-09	3.42E-09	3.42E-09	2.94E-09			7.44E-08
POM/Benzo(k)fluoranthene	6.93E-09	6.93E-09	6.93E-09	6.93E-09	6.93E-09	6.93E-09	6.93E-09	6.93E-09	6.93E-09	5.13E-09	5.13E-09	4.41E-09			1.12E-07
POM/Chrysene	6.93E-09	6.93E-09	6.93E-09	6.93E-09	6.93E-09	6.93E-09	6.93E-09	6.93E-09	6.93E-09	5.13E-09	5.13E-09	4.41E-09			1.12E-07
POM/Dibenzo(a,h)anthracene	4.62E-09	4.62E-09	4.62E-09	4.62E-09	4.62E-09	4.62E-09	4.62E-09	4.62E-09	4.62E-09	3.42E-09	3.42E-09	2.94E-09			7.44E-08
Dichlorobenzene	4.62E-06	4.62E-06	4.62E-06	4.62E-06	4.62E-06	4.62E-06	4.62E-06	4.62E-06	4.62E-06	3.42E-06	3.42E-06	2.94E-06			7.44E-05
POM/Fluoranthene	1.16E-08	1.16E-08	1.16E-08	1.16E-08	1.16E-08	1.16E-08	1.16E-08	1.16E-08	1.16E-08	8.55E-09	8.55E-09	7.35E-09			1.86E-07
POM/Fluorene	1.08E-08	1.08E-08	1.08E-08	1.08E-08	1.08E-08	1.08E-08	1.08E-08	1.08E-08	1.08E-08	7.98E-09	7.98E-09	6.86E-09			1.74E-07
POM/Indeno(1,2,3-cd)pyrene	6.93E-09	6.93E-09	6.93E-09	6.93E-09	6.93E-09	6.93E-09	6.93E-09	6.93E-09	6.93E-09	5.13E-09	5.13E-09	4.41E-09			1.12E-07
POM/Phenanathrene	6.55E-08	6.55E-08	6.55E-08	6.55E-08	6.55E-08	6.55E-08	6.55E-08	6.55E-08	6.55E-08	4.85E-08	4.85E-08	4.17E-08			1.05E-06
POM/Pyrene	1.93E-08	1.93E-08	1.93E-08	1.93E-08	1.93E-08	1.93E-08	1.93E-08	1.93E-08	1.93E-08	1.43E-08	1.43E-08	1.23E-08			3.10E-07
o-Cresol															2.72E-01
Styrene															1.00E-01
Acetophenone															2.77E-02
Dibenzofurans															6.79E-03
Nitrobenzene															3.52E-04
Diethylene Glycol															7.20E-05
Hydrotreated light silicon															
Isopropyl Alcohol															
High Molecular Wt. Silicon															
Total POMs	3.37E-07	3.37E-07	3.37E-07	3.37E-07	3.37E-07	3.37E-07	3.37E-07	3.37E-07	3.37E-07	2.50E-07	2.50E-07	2.15E-07			5.43E-06
Total PAHs															
Total HAPs	**0.007**	**0.007**	**0.007**	**0.007**	**0.007**	**0.007**	**0.007**	**0.007**	**0.007**	**0.005**	**0.005**	**0.005**			**6.396**

Form AI-S003(6) Supplement
Actual Estimated - CY2019
Criteria Pollutant Emissions Summary
East Jordan Foundry, LLC

PROCESS	EU ID	Emissions Estimates - PSD Regulated Pollutants Tons/Year								
		PM	PM10	PM2.5	SOx	NOx	VOC	CO	Lead	CO2e
Charge Handling	EUCHRGHAND	0.245	0.245	0.210						
EIF Melting	EUEIFMELT	0.315	0.301	0.296			1.050	11.555		851
Ductile Inoculation	EUINOC	0.000	0.000	0.000			0.006			
Hot Metal Transfer	EUMETALXFER	0.020	0.018	0.016						
Ladle Repair	EULDLREPAIR									
In-Duct Burners	EUDUCTBURN				0.000	0.080	0.004	0.067	4.00E-07	96
Ladle Heaters	EULDLHEAT	0.114	0.114	0.114	0.009	1.495	0.082	1.256	7.48E-06	1,794
Pouring & Cooling Total		0.036	0.036	0.029	4.552	1.199	21.728	114.213	4.47E-05	432
LML Pouring & Cooling	*EULMLP&C*	*0.036*	*0.036*	*0.029*	*4.552*	*1.199*	*21.728*	*114.213*	*4.47E-05*	*432*
1230 Pouring & Cooling	*EU1230P&C*	*0.036*	*0.036*	*0.029*	*4.552*	*1.199*	*21.728*	*114.213*	*4.47E-05*	*432*
Shakeout Total						0.035	9.244	27.872	2.21E-03	
LML Shakeout	*EULMLSO*					*0.035*	*9.244*	*27.872*	*2.21E-03*	
1230 Shakeout	*EU1230SO*					*0.035*	*9.244*	*27.872*	*2.21E-03*	
Shotblast	EUSHOTBLAST									
Grinding	EUGRIND	0.168	0.000	0.000						
Sand Handling & Storage (H&S)	EUSANDH&S	0.381	0.057	0.057						
Shell Coremaking	EUSHELLCM	0.012	0.012	0.012	0.001	0.155	0.664	0.130	7.75E-07	186
Shell Coremaking		*0.000*	*0.000*	*0.000*			*0.656*			
Shell Core NG		*0.012*	*0.012*	*0.012*	*0.001*	*0.155*	*0.009*	*0.130*	*7.75E-07*	*186*
PUCB Coremaking	EUPUCBCM	0.003	0.003	0.003			1.700			
Mold & Core Room Chemicals	EUMOLDCORECHEM						0.010			
Asphaltic Dip Tank	EUASPHALTDIP	0.014	0.014	0.014	0.001	0.190	5.749	0.160	9.50E-07	228
Asphaltic Dip Coating							*5.739*			
Asphaltic Dip Tank Post Heater		*0.014*	*0.014*	*0.014*	*0.001*	*0.190*	*0.010*	*0.160*	*9.50E-07*	*228*
Makeup Air Units	EUMUAS	0.307	0.307	0.307	0.024	4.035	0.222	3.389	2.02E-05	4,842
MUA-1		*0.029*	*0.029*	*0.029*	*0.002*	*0.385*	*0.021*	*0.323*	*1.93E-06*	*462*
MUA-2		*0.029*	*0.029*	*0.029*	*0.002*	*0.385*	*0.021*	*0.323*	*1.93E-06*	*462*
MUA-3		*0.029*	*0.029*	*0.029*	*0.002*	*0.385*	*0.021*	*0.323*	*1.93E-06*	*462*
MUA-4		*0.029*	*0.029*	*0.029*	*0.002*	*0.385*	*0.021*	*0.323*	*1.93E-06*	*462*
MUA-5		*0.029*	*0.029*	*0.029*	*0.002*	*0.385*	*0.021*	*0.323*	*1.93E-06*	*462*
MUA-6		*0.029*	*0.029*	*0.029*	*0.002*	*0.385*	*0.021*	*0.323*	*1.93E-06*	*462*
MUA-7		*0.029*	*0.029*	*0.029*	*0.002*	*0.385*	*0.021*	*0.323*	*1.93E-06*	*462*
MUA-8		*0.029*	*0.029*	*0.029*	*0.002*	*0.385*	*0.021*	*0.323*	*1.93E-06*	*462*
MUA-9		*0.029*	*0.029*	*0.029*	*0.002*	*0.385*	*0.021*	*0.323*	*1.93E-06*	*462*
MUA-10		*0.022*	*0.022*	*0.022*	*0.002*	*0.285*	*0.016*	*0.239*	*1.43E-06*	*342*
MUA-11		*0.022*	*0.022*	*0.022*	*0.002*	*0.285*	*0.016*	*0.239*	*1.43E-06*	*342*
Various NG Sources	EUVARIOUSNG	0.019	0.019	0.019	0.001	0.245	0.013	0.206	1.23E-06	294
EG-1	EUEG1									
EG-2	EUEG2									
Road Fug. Dust	EUROADS	0.039	0.008	0.008						
Waste Sand Dust Handling	EUWASTESAND									
Baghouse Total		16.064	16.064	16.064						
Baghouses AB		*5.306*	*5.306*	*5.306*						
Baghouse C		*2.731*	*2.731*	*2.731*						
Baghouse D		*2.185*	*2.185*	*2.185*						
Baghouse E		*0.713*	*0.713*	*0.713*						
Baghouse F		*0.713*	*0.713*	*0.713*						
Baghouse G		*0.856*	*0.856*	*0.856*						
Baghouses HJ		*3.511*	*3.511*	*3.511*						
Baghouse K		*0.035*	*0.035*	*0.035*						
Baghouse L		*0.012*	*0.012*	*0.012*						
Total Emissions		**17.74**	**17.20**	**17.15**	**4.59**	**7.43**	**40.47**	**158.85**	**2.28E-03**	**8,723**

Form AI-S003(6) Supplement
Actual Estimated - CY2019
Emissions Calculations
East Jordan Foundry, LLC

Maximum Yearly Capacity
70,033 Tons/Year

Flow Diagram Designation
Charge Handling

Maximum Hourly Capacity
28.00 Tons/Hour

Process Description:
East Jordan Foundry, LLC
Charge Handling
Control Device: Baghouses A/B, E, H/J, K
SCC Code:
Control Device Outlet: gr/dscf
Airflow: acfm
Stack Gas Temperature: 100 °F

The sprue return conveyors (1530) and alloy delivery system are included in the charge handling system.

Facility Process Name:	Criteria Pollutants								
Charge Handling									
Emission Factor Basis:	PM	PM10	PM2.5	SOx	NOx	VOC	CO	Lead	CO_2e
Emission Factors:	0.07	0.07	0.06						
(source)	Note 1	Note 1	Note 3						
Capture Efficiencies:	90.00	90.00	90.00						
Maximum Stack Emission Rate:									
Hourly (lb/hr)	See Controlling BH(s) for Stk Emissions								
Annual (TPY)	See Controlling BH(s) for Stk Emissions								
Maximum Fugitive Emission Rate:									
Hourly (lb/hr)	0.196	0.196	0.168						
Annual (TPY)	**0.245**	**0.245**	**0.210**						
Total Emission Rate:									
Hourly (lb/hr)	0.196	0.196	0.168						
Annual (TPY)	**0.245**	**0.245**	**0.210**						

PROPOSED OPERATING SCHEDULE
24 HRS/DAY
4,580 HRS/YEAR

Note 1: Gutow Article, Modern Casting; January 1972; PM emissions from Raw material handling (0.04 lbs/ton) and charge makeup (0.03 lbs/ton) released to the atmosphere. All PM emission were conservatively assumed to be PM-10 emissions.
Note 2: The Gutow article was supplement with an Ohio EPA RACM document to account for the ventilation at the sprue conveyor and inoculant addition system. Ohio EPA RACM guide indicates that the emissions generated from incoming scrap are of particle size 30 -1000 microns. Therefore the only source of emissions of PM/PM10 from raw material handling is from handling of foundry returns. Sprue return ventilation system would capture 80% of the emissions generated from foundry returns.
Note 3: Emission factor based on USEPA PM Calculator (March 2012) PM to PM2.5 ratio and uncontrolled PM emission factor.

EXAMPLE CALCULATIONS:
Maximum Emission Rate (lb/hr) {building exhausts} = (Emission Factor lb/ton) x (Maximum Hourly Rate tph) x (% returns/100 for PM10 only) x (1- %fugitive rate/100)
Maximum Emission Rate (lb/hr) {fugitive} = (Emission Factor lb/ton) x (Maximum Hourly Rate tph) x (%returns for PM10 only) x (% fugitive emissions rate/100)
Annual (TPY) Emission Rates = (lb/hr emission rate) x (Maximum Annual Melt Rate) / (Maximum Hourly Melt Rate) / (2000 lbs/ton)

Form AI-S003(6) Supplement
Actual Estimated - CY2019
Emissions Calculations
East Jordan Foundry, LLC

Maximum Yearly Capacity
70.033 Tons/Year

Flow Diagram Designation
EIF Melting

Maximum Hourly Capacity
28.00 Tons/Hour

Process Description:
East Jordan Foundry, LLC
EIF Melting
Control Device: Baghouses A/B
SCC Code:
Control Device Outlet: 0.0020 gr/dscf
Airflow: 57,000 acfm
Stack Gas Temperature: 100 °F

Facility Process Name:	Criteria Pollutants								
EIF Melting									
Emission Factor Basis:	**PM**	**PM10**	**PM2.5**	**SOx**	**NOx**	**VOC**	**CO**	**Lead**	**CO_2e**
Emission Factors: lb/ton	0.90	0.86	0.85			0.03	0.33		74.32
(source)	Note 1	Note 1	Note 6			Note 1	Note 4	Note 5	Note 1
Capture Efficiency	99.00	99.00	99.00			99.00	99.00		99.00
Control Efficiency									
Building Capt. Eff									
Maximum Stack Emission Rate:									
Hourly (lb/hr)	See Controlling (BHs) for Stk Emissions					0.832	9.148		674.009
Annual (TPY)	See Controlling (BHs) for Stk Emissions					**1.040**	**11.440**		**842.983**
Maximum Fugitive Emission Rate:									
Hourly (lb/hr)	0.252	0.241	0.237			0.008	0.092		6.809
Annual (TPY)	**0.315**	**0.301**	**0.296**			**0.011**	**0.116**		**8.515**
Total Emission Rate:									
Hourly (lb/hr)	0.252	0.241	0.237			0.840	9.240		680.817
Annual (TPY)	**0.315**	**0.301**	**0.296**			**1.050**	**11.555**		**851.498**

PROPOSED OPERATING SCHEDULE
24 HRS/DAY
4,580 HRS/YEAR

Note 1 Emission factor from FIRE 6.25 SCC 3-04-003-03
Note 2 From Stack testing at Wheland Foundry in Tennessee
Note 3 See below HAPs calculations
Note 4 EJW Foundry Stack Testing (Oct 2010): Results used with Wheland and Technikon information to distribute between melting, pouring, cooling and shakeout
Note 5 EJW Stack Testing (July 2010): Average rate calculated between MS-01 & MS-02. Methane and Nitrous Oxide emissions are not known. Background concentration of CO2 was not considered
Note 6 Emission factor based on USEPA PM Calculator (March 2013) PM to PM2.5 ratio and uncontrolled PM emission factor

EXAMPLE CALCULATIONS:
Maximum Stack Emission Rate (lb/hr) (PM & PM-10)=(gr/acfm) x (acfm) x (1 lb / 7000 grains) x (60 min / 1 hr)
Maximum Stack Emission Rate (lb/hr) (Lead)=(gr/acfm) x (acfm) x (1 lb / 7000 grains) x (60 min / 1 hr)*(Lead EF/PM EF)
Maximum Annual (Ton/yr) Stack Emission Rates = (lb/hr emission rate) x (hours of operation per year at max. rate) x (ton/2000 lbs)
Maximum Fugitive Emission Rate (lb/hr) = ((1 - Capture Efficiency/100) x (Emission Factor) x (Melt ton/hr) x (1-(Settling Factor)/100)
Maximum Annual Fugitive Emissions (ton/yr)= (Hourly fugitive emissions (lb/hr)/ hourly Process rate (ton/hr) x (Annual process rate (tons/yr) x (ton/2000 lbs)
Total Emission Rate (lb/hr) = (Maximum Stack Emission Rate lb/hr) + (Maximum Fugitive Emission Rate lb/hr)
Total Emission Rates Annual (TPY)= (annual stack emissions (ton/yr)) + (annual fugitive emissions (ton/yr))

East Jordan Foundry, LLC
HAP Emission Calculations
EIF Melting

HAPs	CAS #	Note 10 Emission Factor %wt PM	Emissions lbs/hr	Emissions tons/yr	
Antimony (Sb)	7440-36-0				
Arsenic (As)	7440-38-2				
Beryllium (Be)	7440-41-7				
Cadmium (Cd)	7440-43-9				
Chromium (Cr)	7440-47-3	0.30	0.0039	**0.0080**	Note 8
Cobalt (Co)	7440-48-4				
Lead (Pb)	7439-92-1	0.13	0.0017	**0.0035**	Note 9
Manganese (Mn)	7439-96-5	0.70	0.0090	**0.0188**	Note 8
Mercury (Hg)	7439-97-6				
Nickel (Ni)	7440-02-0	0.10	0.0013	**0.0027**	Note 8
Selenium (Se)	7782-49-2				
Acetaldehyde	75-07-0				
Dimethylnaphthalenes	28804-88-8				
Cresol	1319-77-3				
Methylnaphthalenes	90-12-0				
Propionaldehyde	123-38-6				
Methylene diphenyl diisocyanate (MDI)	101-68-8				
4,4-methylenedianiline (MBA)	101-77-9				
Formaldehyde	50-00-0				
Cumene	98-82-8				
Benzene	71-43-2				
O-Xylene	95-47-6				
M-Xylene	108-38-3				
Phenol	108-95-2				
Naphthalene	91-20-3				
Ethyl Benzene	100-41-4				
Hydrogen Flouride	7664-39-3				
Toluene	108-88-3				
P-Xylene	106-42-3				
Hexane	110-54-3				
Xylenes	1330-20-7				
o-Cresol	95-48-7				
Styrene	100-42-5				
Acetophenone	98-86-2				
Dibenzofurans	132-64-9				
Nitrobenzene	98-95-3				
Total HAPs			**1.58E-02**	**3.30E-02**	

Note 8 Emission factors are taken from dewgh range of Gray & Ductile Iron. Emissions were estimated using the highest end of the concentration range of either metal type
Note 9 Emission factor developed using the average compositional lead content of baghouse dust
Note 10 %wt of PM EF multiplied fugitive and stack emissions. Stack emissions derived from air volume allocated to EIFs and gr loading of BH

Form AI-S003(6) Supplement
Actual Estimated - CY2019
Emissions Calculations
East Jordan Foundry, LLC

Maximum Yearly Capacity
1,228 Tons/Year

Flow Diagram Designation
Ductile Inoculation

Maximum Hourly Capacity
28.00 Tons/Hour

Process Description:
East Jordan Foundry, LLC
Ductile Inoculation
Control Device: Baghouses A/B
SCC Code:
Control Device Outlet: gr/dscf
Airflow: acfm
Stack Gas Temperature: °F

Facility Process Name:			Criteria Pollutants								
Ductile Inoculation											
Emission Factor Basis:			PM	PM10	PM2.5	SOx	NOx	VOC	CO	Lead	CO_2e
Emission Factors:	lb/ton		3.00	3.00	1.89			0.005			
(source)			Note 2	Note 2	Note 3			Note 1			
		Capture Efficiency	99.00	99.00	99.00			99.00			
Note 4		Process Design Reduction Eff.	98.00	98.00	98.00						
		Building Capt. Eff									
Maximum Stack Emission Rate:											
Hourly (lb/hr)			See Controlling BH(s) for Stk Emissions					0.139			
Annual (TPY)			See Controlling BH(s) for Stk Emissions					**0.003**			
Maximum Fugitive Emission Rate:											
Hourly (lb/hr)			0.017	0.017	0.011			0.140			
Annual (TPY)			**0.000**	**0.000**	**0.000**			**0.003**			
Total Emission Rate:											
Hourly (lb/hr)			0.017	0.017	0.011			0.279			
Annual (TPY)			**0.000**	**0.000**	**0.000**			**0.006**			

PROPOSED OPERATING SCHEDULE
24 HRS/DAY
4,580 HRS/YEAR

Note 1: Emission factor from FIRE 6.25 SCC 3-04-003-10
Note 2: Emission factor from FIRE 6.25 SCC 3-04-003-22
Note 3: Emission factor based on USEPA PM Calculator (March 2012) PM to PM2.5 ratio and uncontrolled PM emission factor.
Note 4: The inoculation ladle and method of inoculation "Tundish Ladle" that has been chosen is designed to minimize emissions to the atmosphere from this process. The manufacturer advertises a reduction in emissions of 98%.

EXAMPLE CALCULATIONS:
Maximum Fugitive Emission Rate (lb/hr) = (Emission Factor) x (process weight rate (ton/hr)) x (1-(Settling Factor)/100)
Annual (TPY) Emission Rates = (lb/hr emission rate) x (1/ Maximum Hourly Process Rate (tons/hr)) x (Annual process weight rate (tons/yr))x (ton/2000)

Form AI-S003(6) Supplement
Actual Estimated - CY2019
Emissions Calculations
East Jordan Foundry, LLC

Maximum Yearly Capacity
70,033 Tons/Year

Flow Diagram Designation
Hot Metal Transfer

Maximum Hourly Capacity
28.00 Tons/Hour

Process Description:
East Jordan Foundry, LLC
Hot Metal Transfer
Control Device: Baghouses A/B
SCC Code:
Control Device Outlet: gr/dscf
Airflow: acfm
Stack Gas Temperature: °F

Facility Process Name:	Criteria Pollutants								
Hot Metal Transfer									
Emission Factor Basis:	**PM**	**PM10**	**PM2.5**	**SOx**	**NOx**	**VOC**	**CO**	**Lead**	**CO_2e**
Emission Factors:	0.056	0.052	0.046						
(source)	Note 1	Note 2	Note 3						
Capture Efficiency	99.00	99.00	99.00						
Control Efficiency	99.00	99.00	99.00						
Building Capt. Eff									
Maximum Stack Emission Rate:									
Hourly (lb/hr)	See Controlling BH(s) for Stk Emissions								
Annual (TPY)	See Controlling BH(s) for Stk Emissions								
Maximum Fugitive Emission Rate:									
Hourly (lb/hr)	0.016	0.014	0.013						
Annual (TPY)	**0.020**	**0.018**	**0.016**						
Total Emission Rate:									
Hourly (lb/hr)	0.016	0.014	0.013						
Annual (TPY)	**0.020**	**0.018**	**0.016**						

PROPOSED OPERATING SCHEDULE
24 HRS/DAY
4,580 HRS/YEAR

Note 1: Hot metal transfer at building monitor. AP-42, Ch. 12-5, Table 12.5-1
Note 2: Emission factor based on USEPA PM Calculator PM/PM10/PM2.5 ratio and uncontrolled PM emission factor for SCC 30400320

EXAMPLE CALCULATIONS:
Maximum Stack Emission Rate (lb/hr) {PM,PM-10} =(gr/acfm) x (acfm) x (1 lb / 7000 grains) x (60 min / 1 hr)
Maximum Annual (Ton/yr) stack Emission Rates = (lb/hr emission rate) x (hours of operation per year at max. rate) x (ton/2000 lbs)
Maximum Fugitive Emission Rate (lb/hr) = ((1 - Capture Efficiency/100) x (Emission Factor) x (Melt ton/hr) x (1-(Settling Factor)/100)
Maximum Annual Fugitive Emissions (ton/yr)= (Hourly fugitive emissions (lb/hr)/ hourly Process rate (ton/hr) x (Annual process rate (tons/yr) x (ton/2000 lbs)
Total Emission Rate (lb/hr) = (Maximum Stack Emission Rate lb/hr) + (Maximum Fugitive Emission Rate lb/hr)
Total Emission Rates Annual (TPY)= (annual stack emissions (ton/yr)) + (annual fugitive emissions (ton/yr))

Form AI-S003(6) Supplement
Actual Estimated - CY2019
Emissions Calculations
East Jordan Foundry, LLC

Maximum Yearly Capacity
70,033 Tons/Year

Flow Diagram Designation
Ladle Repair

Maximum Hourly Capacity
28.00 Tons/Hour

Process Description:
East Jordan Foundry, LLC
Ladle Repair
Control Device: Baghouse K
SCC Code:
Control Device Outlet: gr/dscf
Airflow: acfm
Stack Gas Temperature: 100 °F

Facility Process Name:		Criteria Pollutants								
Ladle Repair										
Emission Factor Basis:		PM	PM10	PM2.5	SOx	NOx	VOC	CO	Lead	CO_2e
Emission Factors:	lb/ton									
(source)										
	Capture Efficiency	100.00	100.00	100.00						
	Control Efficiency									
	Building Capt. Eff	70.00	70.00	70.00						
Maximum Stack Emission Rate:										
Hourly (lb/hr)		See Controlling BH(s) for Stk Emissions								
Annual (TPY)		See Controlling BH(s) for Stk Emissions								
Maximum Fugitive Emission Rate:										
Hourly (lb/hr)										
Annual (TPY)										
Total Emission Rate:										
Hourly (lb/hr)										
Annual (TPY)										

PROPOSED OPERATING SCHEDULE
22 HRS/DAY
4,580 HRS/YEAR

EXAMPLE CALCULATIONS:
Maximum Stack Emission Rate (lb/hr) {PM,PM-10} =(gr/acfm) x (acfm) x (1 lb / 7000 grains) x (60 min / 1 hr)
Maximum Annual (Ton/yr) stack Emission Rates = (lb/hr emission rate) x (hours of operation per year at max. rate) x (ton/2000 lbs)

Form AI-S003(6) Supplement
Actual Estimated - CY2019
Emissions Calculations
East Jordan Foundry, LLC

Flow Diagram Designation
In-Duct Burners

Process Description:
In-Duct Burners
Control Device:

Natural Gas Combustion

Inputs	
1.5	= Max. Hourly Heat Input Rate (MMBtu/hr)
1020	= MMBtu/MMscf
1470.6	= Max. Hourly Fuel Usage Rate (standard cubic feet hour)
4580	= Maximum Operation (hours/year)
1.6	= Maximum Annual Fuel Usage (MMscf)

POLLUTANT	CAS #	Note 1 Emission Factor ($lb/10^6$ scf)	Maximum Emissions (lbs/hr)	(tpy)
PM/PM10/PM2.5	n/a	7.6	See BH Emissions for each Stk	
NOx	n/a	100.0	0.15	0.08
CO	n/a	84.0	0.12	0.07
Lead	n/a	0.0005	7.35E-07	4.00E-07
SO2	n/a	0.6	0.001	0.000
VOC	n/a	5.5	0.01	0.00
CO_2e	n/a	120,000	176.47	96.00
Arsenic (As)	7440-38-2	2.00E-04	2.94E-07	1.60E-07
Beryllium (Be)	7440-41-7	1.20E-05	1.76E-08	9.60E-09
Cadmium (Cd)	7440-43-9	1.10E-03	1.62E-06	8.80E-07
Chromium (Cr)	7440-47-3	1.40E-03	2.06E-06	1.12E-06
Cobalt (Co)	7440-48-4	8.40E-05	1.24E-07	6.72E-08
Manganese (Mn)	7439-96-5	3.80E-04	5.59E-07	3.04E-07
Mercury (Hg)	7439-97-6	2.60E-04	3.82E-07	2.08E-07
Nickel (Ni)	7440-02-0	2.10E-03	3.09E-06	1.68E-06
Selenium (Se)	7782-49-2	2.40E-05	3.53E-08	1.92E-08
POM/2-Methylnaphthalene	91-57-6	2.40E-05	3.53E-08	1.92E-08
POM/3-Methylchloranthrene	56-49-5	1.80E-06	2.65E-09	1.44E-09
POM/7,12-Dimethylbenz(a)anthracene	57-97-6	1.60E-05	2.35E-08	1.28E-08
POM/Acenaphthene	83-32-9	1.80E-06	2.65E-09	1.44E-09
POM/Acenaphthylene	203-96-8	1.80E-06	2.65E-09	1.44E-09
POM/Anthracene	120-12-7	2.40E-06	3.53E-09	1.92E-09
POM/Benz(a)anthracene	56-55-3	1.80E-06	2.65E-09	1.44E-09
Benzene	71-43-2	2.10E-03	3.09E-06	1.68E-06
POM/Benzo(a)pyrene	50-32-8	1.20E-06	1.76E-09	9.60E-10
POM/Benzo(b)fluoranthene	205-99-2	1.20E-06	1.76E-09	9.60E-10
POM/Benzo(g,h,i)perylene	191-24-2	1.20E-06	1.76E-09	9.60E-10
POM/Benzo(k)fluoranthene	205-82-3	1.80E-06	2.65E-09	1.44E-09
POM/Chrysene	218-01-9	1.80E-06	2.65E-09	1.44E-09
POM/Dibenzo(a,h)anthracene	53-70-3	1.20E-06	1.76E-09	9.60E-10
Dichlorobenzene	25321-22-6	1.20E-03	1.76E-06	9.60E-07
POM/Fluoranthene	206-44-0	3.00E-06	4.41E-09	2.40E-09
POM/Fluorene	86-73-7	2.80E-06	4.12E-09	2.24E-09
Formaldehyde	50-00-0	7.50E-02	1.10E-04	6.00E-05
Hexane	110-54-3	1.80E+00	2.65E-03	1.44E-03
POM/Indeno(1,2,3-cd)pyrene	193-39-5	1.80E-06	2.65E-09	1.44E-09
Naphthalene	91-20-3	6.10E-04	8.97E-07	4.88E-07
POM/Phenanathrene	85-01-8	1.70E-05	2.50E-08	1.36E-08
POM/Pyrene	129-00-0	5.00E-06	7.35E-09	4.00E-09
Toluene	108-88-3	3.40E-03	5.00E-06	2.72E-06
Total POM			1.29E-07	7.01E-08
Total HAPs			2.78E-03	1.51E-03

Note 1: FROM AP-42 Fifth Edition, Supplement D, TABLE 1.4-2&3&4. 7/98 External Combustion Sources 1.4-9. Many emission factors < than specific value. In this case, specific value used to error on conservative side

EXAMPLE CALCULATIONS:
Maximum Hourly Emission = Max.hourly Fuel Usage rate (standard cubic feet hour) x (Pollutant E.F.)
Maximum Yearly Emission = Max.Hourly Emission Rate (lb/hr) x (Maximum Hours of Operation)

Form AI-S003(6) Supplement
Actual Estimated - CY2019
Emissions Calculations
East Jordan Foundry, LLC

Flow Diagram Designation
Ladle Heaters

Process Description:
Ladle Heaters
Control Device:

Natural Gas Combustion

Inputs

28.5	= Max. Hourly Heat Input Rate (MMBtu/hr)
1020	= MMBtu/MMscf
27941.2	= Max. Hourly Fuel Usage Rate (standard cubic feet hour)
4580	= Maximum Operation (hours/year)
29.9	= Maximum Annual Fuel Usage (MMscf)

POLLUTANT	CAS #	Note 1 Emission Factor (lb/10^6 scf)	Maximum Emissions (lbs/hr)	(tpy)
PM/PM10/PM2.5	n/a	7.6	0.21	0.11
NOx	n/a	100.0	2.79	1.50
CO	n/a	84.0	2.35	1.26
Lead	n/a	0.0005	1.40E-05	7.48E-06
SO2	n/a	0.6	0.017	0.009
VOC	n/a	5.5	0.15	0.08
CO_2e	n/a	120,000	3352.94	1794.00
Arsenic (As)	7440-38-2	2.00E-04	5.59E-06	2.99E-06
Beryllium (Be)	7440-41-7	1.20E-05	3.35E-07	1.79E-07
Cadmium (Cd)	7440-43-9	1.10E-03	3.07E-05	1.64E-05
Chromium (Cr)	7440-47-3	1.40E-03	3.91E-05	2.09E-05
Cobalt (Co)	7440-48-4	8.40E-05	2.35E-06	1.26E-06
Manganese (Mn)	7439-96-5	3.80E-04	1.06E-05	5.68E-06
Mercury (Hg)	7439-97-6	2.60E-04	7.26E-06	3.89E-06
Nickel (Ni)	7440-02-0	2.10E-03	5.87E-05	3.14E-05
Selenium (Se)	7782-49-2	2.40E-05	6.71E-07	3.59E-07
POM/2-Methylnaphthalene	91-57-6	2.40E-05	6.71E-07	3.59E-07
POM/3-Methylchloranthrene	56-49-5	1.80E-06	5.03E-08	2.69E-08
POM/7,12-Dimethylbenz(a)anthracene	57-97-6	1.60E-05	4.47E-07	2.39E-07
POM/Acenaphthene	83-32-9	1.80E-06	5.03E-08	2.69E-08
POM/Acenaphthylene	203-96-8	1.80E-06	5.03E-08	2.69E-08
POM/Anthracene	120-12-7	2.40E-06	6.71E-08	3.59E-08
POM/Benz(a)anthracene	56-55-3	1.80E-06	5.03E-08	2.69E-08
Benzene	71-43-2	2.10E-03	5.87E-05	3.14E-05
POM/Benzo(a)pyrene	50-32-8	1.20E-06	3.35E-08	1.79E-08
POM/Benzo(b)fluoranthene	205-99-2	1.20E-06	3.35E-08	1.79E-08
POM/Benzo(g,h,i)perylene	191-24-2	1.20E-06	3.35E-08	1.79E-08
POM/Benzo(k)fluoranthene	205-82-3	1.80E-06	5.03E-08	2.69E-08
POM/Chrysene	218-01-9	1.80E-06	5.03E-08	2.69E-08
POM/Dibenzo(a,h)anthracene	53-70-3	1.20E-06	3.35E-08	1.79E-08
Dichlorobenzene	25321-22-6	1.20E-03	3.35E-05	1.79E-05
POM/Fluoranthene	206-44-0	3.00E-06	8.38E-08	4.49E-08
POM/Fluorene	86-73-7	2.80E-06	7.82E-08	4.19E-08
Formaldehyde	50-00-0	7.50E-02	2.10E-03	1.12E-03
Hexane	110-54-3	1.80E+00	5.03E-02	2.69E-02
POM/Indeno(1,2,3-cd)pyrene	193-39-5	1.80E-06	5.03E-08	2.69E-08
Naphthalene	91-20-3	6.10E-04	1.70E-05	9.12E-06
POM/Phenanathrene	85-01-8	1.70E-05	4.75E-07	2.54E-07
POM/Pyrene	129-00-0	5.00E-06	1.40E-07	7.48E-08
Toluene	108-88-3	3.40E-03	9.50E-05	5.08E-05
Total POM			2.45E-06	1.31E-06
Total HAPs			5.28E-02	2.82E-02

Note 1: FROM AP-42 Fifth Edition, Supplement D, TABLE 1.4-2&3&4. 7/98 External Combustion Sources 1.4-9. Many emission factors < than specific value. In this case, specific value used to error on conservative side

EXAMPLE CALCULATIONS:
Maximum Hourly Emission = Max.hourly Fuel Usage rate (standard cubic feet hour) x (Pollutant E.F.)
Maximum Yearly Emission = Max.Hourly Emission Rate (lb/hr) x (Maximum Hours of Operation)

Form AI-S003(6) Supplement
Actual Estimated - CY2019
Emissions Calculations
East Jordan Foundry, LLC

Maximum Yearly Capacity
35,017 Tons/Year

Flow Diagram Designation
LML Pouring & Cooling

Maximum Hourly Capacity
28.00 Tons/Hour

Process Description:
East Jordan Foundry, LLC
LML Pouring & Cooling
Control Device: Baghouses A/B, D
SCC Code:
Control Device Outlet: 0.0020 gr/dscf gr/dscf
Airflow: 129,000 acfm acfm
Stack Gas Temperature: 100 °F

Facility Process Name:		Criteria Pollutants								
LML Pouring & Cooling										
Emission Factor Basis:		**PM**	**PM10**	**PM2.5**	**SOx**	**NOx**	**VOC**	**CO**	**Lead**	**CO_2e**
Emission Factors:	lb/ton	0.410	0.410	0.336	0.260	0.068	1.241	6.523	0.00048	24.654
(source)		Note 1	Note 1	Note 8	Note 2	Note 6	Note 5	Note 4	Note 3	Note 7
	Capture Efficiency	99.50	99.50	99.50	99.50	99.50	99.50	99.50	99.50	99.50
	Control Efficiency									
	Building Capt. Eff									
Maximum Stack Emission Rate:										
Hourly (lb/hr)		See Controlling BH(s) for Stk Emissions			7.244	1.907	34.574	181.742	2.45E-03	686.854
Annual (TPY)		See Controlling BH(s) for Stk Emissions			**4.529**	**1.193**	**21.619**	**113.642**	**2.80E-06**	**429.486**
Maximum Fugitive Emission Rate:										
Hourly (lb/hr)		0.057	0.057	0.047	0.036	0.010	0.174	0.913	6.71E-05	3.452
Annual (TPY)		**0.036**	**0.036**	**0.029**	**0.023**	**0.006**	**0.109**	**0.571**	**4.19E-05**	**2.158**
Total Emission Rate:										
Hourly (lb/hr)		0.057	0.057	0.047	7.280	1.917	34.748	182.655	2.51E-03	690.305
Annual (TPY)		**0.036**	**0.036**	**0.029**	**4.552**	**1.199**	**21.728**	**114.213**	**4.47E-05**	**431.644**

PROPOSED OPERATING SCHEDULE
24 HRS/DAY
4,580 HRS/YEAR

Note 1: Stack test at Quality Castings, Orrville, OH.
Note 2: 2019 Compliance Test plus 20% allowance for testing and measurement variability each.
Note 3: From Stack testing at Foundry in Mexico (CERP data)
Note 4: EJIW Foundry Stack Testing (Oct 2010). Results used with Wheland and Technikon information to distribute between melting, pouring, cooling and shakeout.
Note 5: EJIW Stack testing (March 2002) and Technikon #1410-117 FU
Note 6: EJIW Stack Testing (March 2002, July 2010)
Note 7: EJIW-Ardmore Foundry Stack Testing (July 2010). Average rate calculated between SS-01 & SS-03. Methane and Nitrous Oxide emissions are not known. Background concentration of CO_2 was not considered.
Note 8: Emission factor based on USEPA PM Calculator (March 2012) PM to PM2.5 ratio and uncontrolled PM emission factor.
Note 9: This shows maximum emissions from this line. Combined group limit on Pouring and Cooling of 28 tph, 128,000 tpy throughput due to max melt rate upstream.
Note 10: Compliance with gaseous criteria pollutants to be demonstrated by summing emissions across all applicable stacks.

EXAMPLE CALCULATIONS:
Maximum Stack Emission Rate (lb/hr) {PM,PM-10} =(gr/acfm) x (acfm) x (1 lb / 7000 grains) x (60 min / 1 hr)
Maximum Stack Emission Rate (lb/hr) {Lead} =(gr/acfm) x (acfm) x (1 lb / 7000 grains) x (60 min / 1 hr) x (EF for Lead/EF for PM-10)
Maximum Stack Emissions Rate (lb/hr) {SOx,NOx, VOC, CO} =(Max. Rated Capacity ton/hr) x (EF in lb/ton) x (Capture Eff./100)
Maximum Annual (Ton/yr) PM, PM10 and lead stack Emission Rates = (lb/hr emission rate) x (hours of operation per year at max. rate) x (ton/2000 lbs)
Maximum Annual (ton/yr) SOx NOx, VOC and CO stack emissions= (Hourly stack emissions (lb/hr)/ hourly Process rate (ton/hr) x (Annual process rate (tons/yr) x (ton/2000 lbs)
Maximum Fugitive Emission Rate (lb/hr) = ((1 - Capture Efficiency/100) x (Emission Factor) x (Melt ton/hr) x (1-(Settling Factor)/100)
Maximum Annual Fugitive Emissions (ton/yr)= (Hourly fugitive emissions (lb/hr)/ hourly Process rate (ton/hr) x (Annual process rate (tons/yr) x (ton/2000 lbs)
Total Emission Rate (lb/hr) = (Maximum Stack Emission Rate lb/hr) + (Maximum Fugitive Emission Rate lb/hr)
Total Emission Rates Annual (TPY)= (annual stack emissions (ton/yr)) + (annual fugitive emissions (ton/yr))

Form AI-S003(6) Supplement
Actual Estimated - CY2019
Emissions Calculations
East Jordan Foundry, LLC

Maximum Yearly Capacity
35,017 Tons/Year

Flow Diagram Designation
1230 Pouring & Cooling

Maximum Hourly Capacity
28.00 Tons/Hour

Process Description:
East Jordan Foundry, LLC
1230 Pouring & Cooling
Control Device: Baghouses A/B, D
SCC Code:
Control Device Outlet: 0.0020 gr/dscf gr/dscf
Airflow: 129,000 acfm acfm
Stack Gas Temperature: 100 °F

Facility Process Name:		Criteria Pollutants								
1230 Pouring & Cooling										
Emission Factor Basis:		PM	PM10	PM2.5	SOx	NOx	VOC	CO	Lead	CO_2e
Emission Factors:	lb/ton	0.410	0.410	0.336	0.260	0.068	1.241	6.523	0.00048	24.654
(source)		Note 1	Note 1	Note 8	Note 2	Note 6	Note 5	Note 4	Note 3	Note 7
Capture Efficiency		99.50	99.50	99.50	99.50	99.50	99.50	99.50	99.50	99.50
Control Efficiency										
Building Capt. Eff										
Maximum Stack Emission Rate:										
Hourly (lb/hr)		See Controlling BH(s) for Stk Emissions			7.244	1.907	34.574	181.742	2.45E-03	686.854
Annual (TPY)		See Controlling BH(s) for Stk Emissions			**4.529**	**1.193**	**21.619**	**113.642**	**2.80E-06**	**429.486**
Maximum Fugitive Emission Rate:										
Hourly (lb/hr)		0.057	0.057	0.047	0.036	0.010	0.174	0.913	6.71E-05	3.452
Annual (TPY)		**0.036**	**0.036**	**0.029**	**0.023**	**0.006**	**0.109**	**0.571**	**4.19E-05**	**2.158**
Total Emission Rate:										
Hourly (lb/hr)		0.057	0.057	0.047	7.280	1.917	34.748	182.655	2.51E-03	690.305
Annual (TPY)		**0.036**	**0.036**	**0.029**	**4.552**	**1.199**	**21.728**	**114.213**	**4.47E-05**	**431.644**

PROPOSED OPERATING SCHEDULE
24 HRS/DAY
4,580 HRS/YEAR

Note 1: Stack test at Quality Castings, Orrville, OH.
Note 2: 2019 Compliance Test plus 20% allowance for testing and measurement variability each.
Note 3: From Stack testing at Foundry in Mexico (CERP data)
Note 4: EJIW Foundry Stack Testing (Oct 2010). Results used with Wheland and Technikon information to distribute between melting, pouring, cooling and shakeout.
Note 5: EJIW Stack testing (March 2002) and Technikon #1410-117 FU. Includes Mold Making emissions.
Note 6: EJIW Stack Testing (March 2002, July 2010)
Note 7: EJIW-Ardmore Foundry Stack Testing (July 2010). Average rate calculated between SS-01 & SS-03. Methane and Nitrous Oxide emissions are not known. Background concentration of CO_2 was not considered.
Note 8: Emission factor based on USEPA PM Calculator (March 2012) PM to PM2.5 ratio and uncontrolled PM emission factor.
Note 9: This shows maximum emissions from this line. Combined group limit on Pouring and Cooling of 28 tph, 128,000 tpy throughput due to max melt rate upstream.
Note 10: Compliance with gaseous criteria pollutants to be demonstrated by summing emissions across all applicable stacks.

EXAMPLE CALCULATIONS:
Maximum Stack Emission Rate (lb/hr) {PM,PM-10} =(gr/acfm) x (acfm) x (1 lb / 7000 grains) x (60 min / 1 hr)
Maximum Stack Emission Rate (lb/hr) {Lead} =(gr/acfm) x (acfm) x (1 lb / 7000 grains) x (60 min / 1 hr) x (EF for Lead/EF for PM-10)
Maximum Stack Emissions Rate (lb/hr) {SOx,NOx, VOC, CO} =(Max. Rated Capacity ton/hr) x (EF in lb/ton) x (Capture Eff./100)
Maximum Annual (Ton/yr) PM, PM10 and lead stack Emission Rates = (lb/hr emission rate) x (hours of operation per year at max. rate) x (ton/2000 lbs)
Maximum Annual (ton/yr) SOx NOx, VOC and CO stack emissions= (Hourly stack emissions (lb/hr)/ hourly Process rate (ton/hr) x (Annual process rate (tons/yr) x (ton/2000 lbs)
Maximum Fugitive Emission Rate (lb/hr) = ((1 - Capture Efficiency/100) x (Emission Factor) x (Melt ton/hr) x (1-(Settling Factor)/100)
Maximum Annual Fugitive Emissions (ton/yr)= (Hourly fugitive emissions (lb/hr)/ hourly Process rate (ton/hr) x (Annual process rate (tons/yr) x (ton/2000 lbs)
Total Emission Rate (lb/hr) = (Maximum Stack Emission Rate lb/hr) + (Maximum Fugitive Emission Rate lb/hr)
Total Emission Rates Annual (TPY)= (annual stack emissions (ton/yr)) + (annual fugitive emissions (ton/yr))

Form AI-S003(6) Supplement
Actual Estimated - CY2019
Emissions Calculations
East Jordan Foundry, LLC

Maximum Yearly Capacity
35,017 Tons/Year

Flow Diagram Designation
LML Pouring Operations
East Jordan Foundry, LLC
HAP Emission Calculations

Maximum Hourly Capacity
28.00 Tons/Hour

Control Device: Baghouses A/B
Capture Efficiency 99 %
Control Efficiency 99 %

	HAPs	CAS #	Emission Factor lb/ton	Controls Note 2	Emissions lbs/hr	Emissions tons/yr
Note 1	Antimony (Sb)	7440-36-0				
Note 1	Arsenic (As)	7440-38-2	1.14E-05	Baghouse	6.35E-06	**3.97E-06**
Note 1	Beryllium (Be)	7440-41-7				
Note 1	Cadmium (Cd)	7440-43-9	8.81E-06	Baghouse	4.91E-06	**3.07E-06**
Note 1	Chromium (Cr)	7440-47-3	6.72E-05	Baghouse	3.74E-05	**2.34E-05**
Note 1	Cobalt (Co)	7440-48-4	5.13E-03	Baghouse	2.86E-03	**1.79E-03**
Note 1	Lead (Pb)	7439-92-1				
	Manganese (Mn)	7439-96-5	2.04E-03	Baghouse	1.14E-03	**7.11E-04**
Note 1	Mercury (Hg)	7439-97-6				
Note 1	Nickel (Ni)	7440-02-0	No Data	Baghouse		
Note 1	Selenium (Se)	7782-49-2				
Note 1	Acetaldehyde	75-07-0	4.18E-04	Baghouse	1.17E-02	**7.32E-03**
	Dimethylnaphthalenes	28804-88-8				
	Cresol	1319-77-3				
	Methylnaphthalenes	90-12-0				
	Propionaldehyde	123-38-6				
	Methylene diphenyl diisocyanate (MDI)	101-68-8				
	4,4-methylenedianiline (MBA)	101-77-9				
Note 1	Formaldehyde	50-00-0	2.61E-04	None	7.31E-03	**4.57E-03**
Note 1	Cumene	98-82-8	1.33E-05	None	3.72E-04	**2.33E-04**
Note 1	Benzene	71-43-2	3.48E-03	None	9.74E-02	**6.09E-02**
Note 1	O-Xylene	95-47-6	2.70E-04	None	7.56E-03	**4.73E-03**
Note 1	M-Xylene	108-38-3	6.10E-04	None	1.71E-02	**1.07E-02**
Note 1	Phenol	108-95-2	4.60E-04	None	1.29E-02	**8.05E-03**
Note 1	Naphthalene	91-20-3	2.72E-04	None	7.62E-03	**4.76E-03**
Note 1	Ethyl Benzene	100-41-4	1.38E-04	None	3.86E-03	**2.42E-03**
	Hydrogen Flouride	7664-39-3				
Note 1	Toluene	108-88-3	1.52E-03	None	4.26E-02	**2.66E-02**
	P-Xylene	106-42-3				
	Hexane	110-54-3				
	Xylenes	1330-20-7			**2.46E-02**	**1.54E-02**
Note 1	o-Cresol	95-48-7	6.60E-06	None	1.85E-04	**1.16E-04**
Note 1	Styrene	100-42-5	8.28E-05	None	2.32E-03	**1.45E-03**
	Acetophenone	98-86-2				
	Dibenzofurans	132-64-9				
	Nitrobenzene	98-95-3				
Note 1	Total POMs		5.50E-04	None	0.015	**0.010**
	Total HAPs				**0.215**	**0.134**

Note 1: Emission factors taken from the document entitled "Foundry Process Emission Factors: Baseline Emissions from Automotive Foundries in Mexico"; (CERP-Mexico)

Note 2: HAPs that are particulates are captured by the Baghouse. A conservative control efficiency of 95% was utilized for the control efficiency of captured emissions. A capture rate of 90% was used.

Note 3: Max emissions from this line. Combined group limit on Pouring and Cooling of 28 tph, 128,000 tpy throughput due to max melt rate upstream

PROPOSED OPERATING SCHEDULE
24 HRS/DAY
4,580 HRS/YEAR

Form AI-S003(6) Supplement
Actual Estimated - CY2019
Emissions Calculations
East Jordan Foundry, LLC

Maximum Yearly Capacity
35,017 Tons/Year

Flow Diagram Designation
1230 Pouring Operations
East Jordan Foundry, LLC
HAP Emission Calculations

Maximum Hourly Capacity
28.00 Tons/Hour

Control Device: Baghouses A/B
Capture Efficiency 99 %
Control Efficiency 99 %

	HAPs	CAS #	Emission Factor lb/ton	Controls Note 2	Emissions lbs/hr	Emissions tons/yr
Note 1	Antimony (Sb)	7440-36-0				
Note 1	Arsenic (As)	7440-38-2	1.14E-05	Baghouse	6.35E-06	**3.97E-06**
Note 1	Beryllium (Be)	7440-41-7				
Note 1	Cadmium (Cd)	7440-43-9	8.81E-06	Baghouse	4.91E-06	**3.07E-06**
Note 1	Chromium (Cr)	7440-47-3	6.72E-05	Baghouse	3.74E-05	**2.34E-05**
Note 1	Cobalt (Co)	7440-48-4	5.13E-03	Baghouse	2.86E-03	**1.79E-03**
Note 1	Lead (Pb)	7439-92-1				
	Manganese (Mn)	7439-96-5	2.04E-03	Baghouse	1.14E-03	**7.11E-04**
Note 1	Mercury (Hg)	7439-97-6				
Note 1	Nickel (Ni)	7440-02-0	No Data	Baghouse		
Note 1	Selenium (Se)	7782-49-2				
Note 1	Acetaldehyde	75-07-0	4.18E-04	Baghouse	1.17E-02	**7.32E-03**
	Dimethylnaphthalenes	28804-88-8				
	Cresol	1319-77-3				
	Methylnaphthalenes	90-12-0				
	Propionaldehyde	123-38-6				
	Methylene diphenyl diisocyanate (MDI)	101-68-8				
	4,4-methylenedianiline (MBA)	101-77-9				
Note 1	Formaldehyde	50-00-0	2.61E-04	None	7.31E-03	**4.57E-03**
Note 1	Cumene	98-82-8	1.33E-05	None	3.72E-04	**2.33E-04**
Note 1	Benzene	71-43-2	3.48E-03	None	9.74E-02	**6.09E-02**
Note 1	O-Xylene	95-47-6	2.70E-04	None	7.56E-03	**4.73E-03**
Note 1	M-Xylene	108-38-3	6.10E-04	None	1.71E-02	**1.07E-02**
Note 1	Phenol	108-95-2	4.60E-04	None	1.29E-02	**8.05E-03**
Note 1	Naphthalene	91-20-3	2.72E-04	None	7.62E-03	**4.76E-03**
Note 1	Ethyl Benzene	100-41-4	1.38E-04	None	3.86E-03	**2.42E-03**
	Hydrogen Flouride	7664-39-3				
Note 1	Toluene	108-88-3	1.52E-03	None	4.26E-02	**2.66E-02**
	P-Xylene	106-42-3				
	Hexane	110-54-3				
	Xylenes	1330-20-7			**2.46E-02**	**1.54E-02**
Note 1	o-Cresol	95-48-7	6.60E-06	None	1.85E-04	**1.16E-04**
Note 1	Styrene	100-42-5	8.28E-05	None	2.32E-03	**1.45E-03**
	Acetophenone	98-86-2				
	Dibenzofurans	132-64-9				
	Nitrobenzene	98-95-3				
Note 1	Total POMs		5.50E-04	None	0.015	**0.010**
	Total HAPs				**0.215**	**0.134**

Note 1: Emission factors taken from the document entitled "Foundry Process Emission Factors: Baseline Emissions from Automotive Foundries in Mexico"; (CERP-Mexico)
Note 2: HAPs that are particulates are captured by the Baghouse. A conservative control efficiency of 95% was utilized for the control efficiency of captured emissions. A capture rate of 90% was used.
Note 3: Max emissions from this line. Combined group limit on Pouring and Cooling of 28 tph, 128,000 tpy throughput due to max melt rate upstream

PROPOSED OPERATING SCHEDULE
24 HRS/DAY
4,580 HRS/YEAR

Form AI-S003(6) Supplement
Actual Estimated - CY2019
Emissions Calculations
East Jordan Foundry, LLC

Maximum Yearly Capacity
35,017 Tons/Year

Flow Diagram Designation
LML Mold Cooling Operations
East Jordan Foundry, LLC
HAP Emission Calculations

Maximum Hourly Capacity
28.00 Tons/Hour

Control Device: aghouses A/B, D
Capture Efficiency 100 %
Control Efficiency 99 %

	HAPs	CAS #	Emission Factor lb/ton	Controls Note 2	Emissions lbs/hr	Emissions tons/yr
Note 1	Antimony (Sb)	7440-36-0	6.21E-05	Baghouse	1.74E-05	**1.09E-05**
	Arsenic (As)	7440-38-2				
	Beryllium (Be)	7440-41-7				
Note 1	Cadmium (Cd)	7440-43-9	4.37E-05	Baghouse	1.22E-05	**7.65E-06**
Note 1	Chromium (Cr)	7440-47-3	3.12E-04	Baghouse	8.74E-05	**5.46E-05**
Note 1	Cobalt (Co)	7440-48-4	1.72E-04	Baghouse	4.82E-05	**3.01E-05**
	Lead (Pb)	7439-92-1				
Note 1	Manganese (Mn)	7439-96-5	1.12E-03	Baghouse	3.14E-04	**1.96E-04**
	Mercury (Hg)	7439-97-6				
Note 1	Nickel (Ni)	7440-02-0	4.32E-04	Baghouse	1.21E-04	**7.56E-05**
Note 1	Selenium (Se)	7782-49-2	2.46E-05	Baghouse	6.89E-06	
Note 1	Acetaldehyde	75-07-0	4.30E-03	Baghouse	1.20E-01	**7.53E-02**
	Dimethylnaphthalenes	28804-88-8				
	Cresol	1319-77-3				
	Methylnaphthalenes	90-12-0				
Note 1	Propionaldehyde	123-38-6	5.68E-05	Baghouse	1.59E-03	**9.94E-04**
	Methylene diphenyl diisocyanate (MDI)	101-68-8				
	4,4-methylenedianiline (MBA)	101-77-9				
Note 1	Formaldehyde	50-00-0	2.67E-03	None	7.48E-02	**4.67E-02**
Note 1	Cumene	98-82-8	1.92E-04	None	5.38E-03	**3.36E-03**
Note 1	Benzene	71-43-2	4.53E-02	None	1.27E+00	**7.93E-01**
Note 1	O-Xylene	95-47-6	4.93E-03	None	1.38E-01	**8.63E-02**
Note 1	M-Xylene	108-38-3	9.55E-03	None	2.67E-01	**1.67E-01**
Note 1	Phenol	108-95-2	8.64E-03	None	2.42E-01	**1.51E-01**
Note 1	Naphthalene	91-20-3	3.87E-03	None	1.08E-01	**6.78E-02**
Note 1	Ethyl Benzene	100-41-4	2.34E-03	None	6.55E-02	**4.10E-02**
	Hydrogen Flouride	7664-39-3				
Note 1	Toluene	108-88-3	2.44E-02	None	6.83E-01	**4.27E-01**
	P-Xylene	106-42-3				
	Hexane	110-54-3				
	Xylenes	1330-20-7			4.05E-01	**2.54E-01**
Note 1	o-Cresol	95-48-7	1.51E-03	None	4.23E-02	**2.64E-02**
Note 1	Styrene	100-42-5	8.26E-04	None	2.31E-02	**1.45E-02**
Note 1	Acetophenone	98-86-2	7.90E-04	None	2.21E-02	**1.38E-02**
Note 1	Dibenzofurans	132-64-9	5.39E-05	None	1.51E-03	**9.44E-04**
Note 1	Nitrobenzene	98-95-3	2.01E-05	None	5.63E-04	**3.52E-04**
Note 1	Total POMs		8.99E-03	None	0.252	**0.157**
	Total HAPs				**3.041**	**1.902**

Note 1: Emission factors taken from the document entitled "Foundry Process Emission Factors: Baseline Emissions from Automotive Foundries in Mexico"; (CERP-Mexico)

Note 2: HAPs that are particulates are captured by the Baghouse. A conservative control efficiency of 95% was utilized for the control efficiency of captured emissions. A capture rate of 98% was used.

Note 3: Max emissions from this line. Combined group limit on Pouring and Cooling of 28 tph, 128,000 tpy throughput due to max melt rate upstream

PROPOSED OPERATING SCHEDULE
24 HRS/DAY
4,580 HRS/YEAR

Form AI-S003(6) Supplement
Actual Estimated - CY2019
Emissions Calculations
East Jordan Foundry, LLC

Maximum Yearly Capacity
35,017 Tons/Year

Flow Diagram Designation
1230 Mold Cooling Operations
East Jordan Foundry, LLC
HAP Emission Calculations

Maximum Hourly Capacity
28.00 Tons/Hour

Control Device: aghouses A/B, D
Capture Efficiency 100 %
Control Efficiency 99 %

	HAPs	CAS #	Emission Factor lb/ton	Controls Note 2	Emissions lbs/hr	Emissions tons/yr
Note 1	Antimony (Sb)	7440-36-0	6.21E-05	Baghouse	1.74E-05	1.09E-05
	Arsenic (As)	7440-38-2				
	Beryllium (Be)	7440-41-7				
Note 1	Cadmium (Cd)	7440-43-9	4.37E-05	Baghouse	1.22E-05	7.65E-06
Note 1	Chromium (Cr)	7440-47-3	3.12E-04	Baghouse	8.74E-05	5.46E-05
Note 1	Cobalt (Co)	7440-48-4	1.72E-04	Baghouse	4.82E-05	3.01E-05
	Lead (Pb)	7439-92-1				
Note 1	Manganese (Mn)	7439-96-5	1.12E-03	Baghouse	3.14E-04	1.96E-04
	Mercury (Hg)	7439-97-6				
Note 1	Nickel (Ni)	7440-02-0	4.32E-04	Baghouse	1.21E-04	7.56E-05
Note 1	Selenium (Se)	7782-49-2	2.46E-05	Baghouse	6.89E-06	
Note 1	Acetaldehyde	75-07-0	4.30E-03	Baghouse	1.20E-01	7.53E-02
	Dimethylnaphthalenes	28804-88-8				
	Cresol	1319-77-3				
	Methylnaphthalenes	90-12-0				
Note 1	Propionaldehyde	123-38-6	5.68E-05	Baghouse	1.59E-03	9.94E-04
	Methylene diphenyl diisocyanate (MDI)	101-68-8				
	4,4-methylenedianiline (MBA)	101-77-9				
Note 1	Formaldehyde	50-00-0	2.67E-03	None	7.48E-02	4.67E-02
Note 1	Cumene	98-82-8	1.92E-04	None	5.38E-03	3.36E-03
Note 1	Benzene	71-43-2	4.53E-02	None	1.27E+00	7.93E-01
Note 1	O-Xylene	95-47-6	4.93E-03	None	1.38E-01	8.63E-02
Note 1	M-Xylene	108-38-3	9.55E-03	None	2.67E-01	1.67E-01
Note 1	Phenol	108-95-2	8.64E-03	None	2.42E-01	1.51E-01
Note 1	Naphthalene	91-20-3	3.87E-03	None	1.08E-01	6.78E-02
Note 1	Ethyl Benzene	100-41-4	2.34E-03	None	6.55E-02	4.10E-02
	Hydrogen Flouride	7664-39-3				
Note 1	Toluene	108-88-3	2.44E-02	None	6.83E-01	4.27E-01
	P-Xylene	106-42-3				
	Hexane	110-54-3				
	Xylenes	1330-20-7			4.05E-01	2.54E-01
Note 1	o-Cresol	95-48-7	1.51E-03	None	4.23E-02	2.64E-02
Note 1	Styrene	100-42-5	8.26E-04	None	2.31E-02	1.45E-02
Note 1	Acetophenone	98-86-2	7.90E-04	None	2.21E-02	1.38E-02
Note 1	Dibenzofurans	132-64-9	5.39E-05	None	1.51E-03	9.44E-04
Note 1	Nitrobenzene	98-95-3	2.01E-05	None	5.63E-04	3.52E-04
Note 1	Total POMs		8.99E-03	None	0.252	0.157
	Total HAPs				3.041	1.902

Note 1: Emission factors taken from the document entitled "Foundry Process Emission Factors: Baseline Emissions from Automotive Foundries in Mexico"; (CERP-Mexico)

Note 2: HAPs that are particulates are captured by the Baghouse. A conservative control efficiency of 95% was utilized for the control efficiency of captured emissions. A capture rate of 98% was used.

Note 3: Max emissions from this line. Combined group limit on Pouring and Cooling of 28 tph, 128,000 tpy throughput due to max melt rate upstream

PROPOSED OPERATING SCHEDULE
24 HRS/DAY
4,580 HRS/YEAR

Form AI-S003(6) Supplement
Actual Estimated - CY2019
Emissions Calculations
East Jordan Foundry, LLC

Maximum Yearly Capacity
35,017 Tons/Year

Flow Diagram Designation
LML Shakeout

Maximum Hourly Capacity
28.00 Tons/Hour

Process Description:
East Jordan Foundry, LLC
LML Shakeout
Control Device: Baghouses C, D, E
SCC Code:
Control Device Outlet: gr/dscf gr/dscf
Airflow: acfm acfm
Stack Gas Temperature: 100 °F

Facility Process Name:			**Criteria Pollutants**								
	LML Shakeout										
Emission Factor Basis:			**PM**	**PM10**	**PM2.5**	**SOx**	**NOx**	**VOC**	**CO**	**Lead**	**CO_2e**
Emission Factors:		lb/ton	3.20	2.24	1.34		0.002	0.528	1.592	1.26E-04	
(source)			Note 1	Note 6	Note 6		Note 5	Note 4	Note 2	Note 3	Note 4
		Capture Efficiency	100.00	100.00	100.00		100.00	100.00	100.00	100.00	
		Control Efficiency									
		Building Capt. Eff									
Maximum Stack Emission Rate:											
	Hourly (lb/hr)		See Controlling BH(s) for Stk Emissions				0.056	14.784	44.574	3.53E-03	
	Annual (TPY)		See Controlling BH(s) for Stk Emissions				**0.035**	**9.244**	**27.872**	**2.21E-03**	
Maximum Fugitive Emission Rate:											
	Hourly (lb/hr)										
	Annual (TPY)										
Total Emission Rate:											
	Hourly (lb/hr)						0.056	14.784	44.574	3.53E-03	
	Annual (TPY)						**0.035**	**9.244**	**27.872**	**2.21E-03**	

PROPOSED OPERATING SCHEDULE
22 HRS/DAY
4,580 HRS/YEAR

Note 1: Emission factor from FIRE 6.25 SCC 3-04-003-31
Note 2: EJIW-Ardmore Foundry Stack Testing (Oct 2010). Results used with Wheland and Technikon information to distribute between melting, pouring, cooling and shakeout.
Note 3: Factors: Baseline Emissions from Automotive Foundries in Mexico"
Note 4: C02e emissions included in Pouring & Mold Cooling Tab
Note 5: Emission factor from EJIW stack test (July 2010)
Note 6: Emission factor based on USEPA PM Calculator (March 2012) PM to PM2.5 ratio and uncontrolled PM emission factor.
Note 7: Max emissions from this line. Combined group limit on Shakeout of 28 tph, 128,000 tpy throughput due to max melt rate upstream

EXAMPLE CALCULATIONS:
Maximum Stack Emission Rate (lb/hr) {PM,PM-10} =(gr/acfm) x (acfm) x (1 lb / 7000 grains) x (60 min / 1 hr)
Maximum Stack Emission Rate (lb/hr) {Lead} =(gr/acfm) x (acfm) x (1 lb / 7000 grains) x (60 min / 1 hr) x (EF for Lead/EF for PM-10)
Maximum Stack Emissions Rate (lb/hr) {VOC, CO} =(Max. Rated Capacity ton/hr) x (EF in lb/ton) x (Capture Eff./100)
Maximum Annual (Ton/yr) PM, PM10 and lead stack Emission Rates = (lb/hr emission rate) x (hours of operation per year at max. rate) x (ton/2000 lbs)
Maximum Annual (ton/yr) VOC and CO stack emissions= (Hourly stack emissions (lb/hr)/ hourly Process rate (ton/hr) x (Annual process rate (tons/yr) x (ton/2000 lbs)
Maximum Fugitive Emission Rate (lb/hr) = ((1 - Capture Efficiency/100) x (Emission Factor) x (Melt ton/hr) x (1-(Settling Factor)/100)
Maximum Annual Fugitive Emissions (ton/yr)= (Hourly fugitive emissions (lb/hr)/ hourly Process rate (ton/hr) x (Annual process rate (tons/yr) x (ton/2000 lbs)
Total Emission Rate (lb/hr) = (Maximum Stack Emission Rate lb/hr) + (Maximum Fugitive Emission Rate lb/hr)
Total Emission Rates Annual (TPY)= (annual stack emissions (ton/yr)) + (annual fugitive emissions (ton/yr))

Form AI-S003(6) Supplement
Actual Estimated - CY2019
Emissions Calculations
East Jordan Foundry, LLC

Maximum Yearly Capacity
35,017 Tons/Year

Flow Diagram Designation
1230 Shakeout

Maximum Hourly Capacity
28.00 Tons/Hour

Process Description:
East Jordan Foundry, LLC
1230 Shakeout
Control Device: Baghouses C, D, E
SCC Code:
Control Device Outlet: gr/dscf gr/dscf
Airflow: acfm acfm
Stack Gas Temperature: 100 °F

Facility Process Name:			Criteria Pollutants								
1230 Shakeout											
Emission Factor Basis:			**PM**	**PM10**	**PM2.5**	**SOx**	**NOx**	**VOC**	**CO**	**Lead**	**CO_2e**
Emission Factors:		lb/ton	3.20	2.24	1.34		0.002	0.528	1.592	1.26E-04	
(source)			Note 1	Note 6	Note 6		Note 5	Note 4	Note 2	Note 3	Note 4
		Capture Efficiency	100.00	100.00	100.00		100.00	100.00	100.00	100.00	
		Control Efficiency									
		Building Capt. Eff									
Maximum Stack Emission Rate:											
	Hourly (lb/hr)		See Controlling BH(s) for Stk Emissions				0.056	14.784	44.574	3.53E-03	
	Annual (TPY)		See Controlling BH(s) for Stk Emissions				**0.035**	**9.244**	**27.872**	**2.21E-03**	
Maximum Fugitive Emission Rate:											
	Hourly (lb/hr)										
	Annual (TPY)										
Total Emission Rate:											
	Hourly (lb/hr)						0.056	14.784	44.574	3.53E-03	
	Annual (TPY)						**0.035**	**9.244**	**27.872**	**2.21E-03**	

PROPOSED OPERATING SCHEDULE
22 HRS/DAY
4,580 HRS/YEAR

Note 1: Emission factor from FIRE 6.25 SCC 3-04-003-31
Note 2: EJIW-Ardmore Foundry Stack Testing (Oct 2010). Results used with Wheland and Technikon information to distribute between melting, pouring, cooling and shakeout.
Note 3: Factors: Baseline Emissions from Automotive Foundries in Mexico"
Note 4: C02e emissions included in Pouring & Mold Cooling Tab
Note 5: Emission factor from EJIW stack test (July 2010)
Note 6: Emission factor based on USEPA PM Calculator (March 2012) PM to PM2.5 ratio and uncontrolled PM emission factor.
Note 7: Max emissions from this line: Combined group limit on Shakeout of 28 tph, 128,000 tpy throughput due to max melt rate upstream

EXAMPLE CALCULATIONS:
Maximum Stack Emission Rate (lb/hr) {PM,PM-10} =(gr/acfm) x (acfm) x (1 lb / 7000 grains) x (60 min / 1 hr)
Maximum Stack Emission Rate (lb/hr) {Lead} =(gr/acfm) x (acfm) x (1 lb / 7000 grains) x (60 min / 1 hr) x (EF for Lead/EF for PM-10)
Maximum Stack Emissions Rate (lb/hr) {VOC, CO} =(Max. Rated Capacity ton/hr) x (EF in lb/ton) x (Capture Eff./100)
Maximum Annual (Ton/yr) PM, PM10 and lead stack Emission Rates = (lb/hr emission rate) x (hours of operation per year at max. rate) x (ton/2000 lbs)
Maximum Annual (ton/yr) VOC and CO stack emissions= (Hourly stack emissions (lb/hr)/ hourly Process rate (ton/hr) x (Annual process rate (tons/yr) x (ton/2000 lbs)
Maximum Fugitive Emission Rate (lb/hr) = ((1 - Capture Efficiency/100) x (Emission Factor) x (Melt ton/hr) x (1-(Settling Factor)/100)
Maximum Annual Fugitive Emissions (ton/yr)= (Hourly fugitive emissions (lb/hr)/ hourly Process rate (ton/hr) x (Annual process rate (tons/yr) x (ton/2000 lbs)
Total Emission Rate (lb/hr) = (Maximum Stack Emission Rate lb/hr) + (Maximum Fugitive Emission Rate lb/hr)
Total Emission Rates Annual (TPY)= (annual stack emissions (ton/yr)) + (annual fugitive emissions (ton/yr))

Form AI-S003(6) Supplement
Actual Estimated - CY2019
Emissions Calculations
East Jordan Foundry, LLC

Maximum Yearly Capacity
35,017 Tons/Year

Maximum Hourly Capacity
28.00 Tons/Hour

Flow Diagram Designation
LML Shakeout HAPS
East Jordan Foundry, LLC
HAP Emission Calculations

Control Device: Baghouses C, D, E
Capture Efficiency 100 %
Control Efficiency 95 %

	HAPs	CAS #	Emission Factor lb/ton	Controls Note 2	Emissions lbs/hr	Emissions tons/yr
Note 1	Antimony (Sb)	7440-36-0	7.59E-06	Baghouse	1.06E-05	**6.64E-06**
	Arsenic (As)	7440-38-2				
	Beryllium (Be)	7440-41-7				
Note 1	Cadmium (Cd)	7440-43-9	1.67E-05	Baghouse	2.34E-05	**1.46E-05**
Note 1	Chromium (Cr)	7440-47-3	3.00E-04	Baghouse	4.20E-04	**2.63E-04**
Note 1	Cobalt (Co)	7440-48-4	2.49E-04	Baghouse	3.49E-04	**2.18E-04**
	Lead (Pb)	7439-92-1				
Note 1	Manganese (Mn)	7439-96-5	7.47E-04	Baghouse	1.05E-03	**6.54E-04**
	Mercury (Hg)	7439-97-6				
Note 1	Nickel (Ni)	7440-02-0	6.66E-04	Baghouse	9.32E-04	**5.83E-04**
	Selenium (Se)	7782-49-2				
Note 1	Acetaldehyde	75-07-0	5.78E-02	None	1.62E+00	**1.01E+00**
	Dimethylnaphthalenes	28804-88-8				
	Cresol	1319-77-3				
	Methylnaphthalenes	90-12-0				
Note 1	Propionaldehyde	123-38-6	5.70E-03	None	1.60E-01	**9.98E-02**
	Methylene diphenyl diisocyanate (MDI)	101-68-8				
	4,4-methylenedianiline (MBA)	101-77-9				
Note 1	Formaldehyde	50-00-0	2.57E-02	None	7.20E-01	**4.50E-01**
Note 1	Cumene	98-82-8	3.82E-04	None	1.07E-02	**6.69E-03**
Note 1	Benzene	71-43-2	2.68E-02	None	7.50E-01	**4.69E-01**
Note 1	O-Xylene	95-47-6	5.32E-03	None	1.49E-01	**9.31E-02**
Note 1	M-Xylene	108-38-3	1.25E-02	None	3.50E-01	**2.19E-01**
Note 1	Phenol	108-95-2	2.80E-02	None	7.84E-01	**4.90E-01**
Note 1	Naphthalene	91-20-3	8.37E-03	None	2.34E-01	**1.47E-01**
Note 1	Ethyl Benzene	100-41-4	2.91E-03	None	8.15E-02	**5.09E-02**
	Hydrogen Flouride	7664-39-3				
Note 1	Toluene	108-88-3	2.21E-02	None	6.19E-01	**3.87E-01**
	P-Xylene	106-42-3				
	Hexane	110-54-3				
Note 1	Xylenes	1330-20-7	1.78E-02	None	4.98E-01	**3.12E-01**
Note 1	o-Cresol	95-48-7	1.40E-02	None	3.92E-01	**2.45E-01**
Note 1	Styrene	100-42-5	4.81E-03	None	1.35E-01	**8.42E-02**
Note 1	Acetophenone	98-86-2	7.92E-04	None	2.22E-02	**1.39E-02**
Note 1	Dibenzofurans	132-64-9	3.34E-04	None	9.35E-03	**5.85E-03**
	Nitrobenzene	98-95-3				
Note 1	Total POMs		2.21E-02	None	0.619	**0.387**
	Total HAPs				**6.536**	**4.087**

Note 1: Emission factors taken from the document entitled "Foundry Process Emission Factors: Baseline Emissions from Automotive Foundries in Mexico"; (CERP-Mexico)

Note 2: HAPs that are particulates are captured by the Baghouse. A conservative control efficiency of 95% was utilized with 99% capture for the emission calculations.

Note 3: Max emissions from this line. Combined group limit on Shakeout of 28 tph, 128,000 tpy throughput due to max melt rate upstream

PROPOSED OPERATING SCHEDULE
22 HRS/DAY
4,580 HRS/YEAR

Form AI-S003(6) Supplement
Actual Estimated - CY2019
Emissions Calculations
East Jordan Foundry, LLC

Maximum Yearly Capacity
35,017 Tons/Year

Flow Diagram Designation
1230 Shakeout HAPS
East Jordan Foundry, LLC
HAP Emission Calculations

Maximum Hourly Capacity
28.00 Tons/Hour

Control Device: Baghouses C, D, E
Capture Efficiency 100 %
Control Efficiency 95 %

	HAPs	CAS #	Emission Factor lb/ton	Controls Note 2	Emissions lbs/hr	Emissions tons/yr
Note 1	Antimony (Sb)	7440-36-0	7.59E-06	Baghouse	1.06E-05	**6.64E-06**
	Arsenic (As)	7440-38-2				
	Beryllium (Be)	7440-41-7				
Note 1	Cadmium (Cd)	7440-43-9	1.67E-05	Baghouse	2.34E-05	**1.46E-05**
Note 1	Chromium (Cr)	7440-47-3	3.00E-04	Baghouse	4.20E-04	**2.63E-04**
Note 1	Cobalt (Co)	7440-48-4	2.49E-04	Baghouse	3.49E-04	**2.18E-04**
	Lead (Pb)	7439-92-1				
Note 1	Manganese (Mn)	7439-96-5	7.47E-04	Baghouse	1.05E-03	**6.54E-04**
	Mercury (Hg)	7439-97-6				
Note 1	Nickel (Ni)	7440-02-0	6.66E-04	Baghouse	9.32E-04	**5.83E-04**
	Selenium (Se)	7782-49-2				
Note 1	Acetaldehyde	75-07-0	5.78E-02	None	1.62E+00	**1.01E+00**
	Dimethylnaphthalenes	28804-88-8				
	Cresol	1319-77-3				
	Methylnaphthalenes	90-12-0				
Note 1	Propionaldehyde	123-38-6	5.70E-03	None	1.60E-01	**9.98E-02**
	Methylene diphenyl diisocyanate (MDI)	101-68-8				
	4,4-methylenedianiline (MBA)	101-77-9				
Note 1	Formaldehyde	50-00-0	2.57E-02	None	7.20E-01	**4.50E-01**
Note 1	Cumene	98-82-8	3.82E-04	None	1.07E-02	**6.69E-03**
Note 1	Benzene	71-43-2	2.68E-02	None	7.50E-01	**4.69E-01**
Note 1	O-Xylene	95-47-6	5.32E-03	None	1.49E-01	**9.31E-02**
Note 1	M-Xylene	108-38-3	1.25E-02	None	3.50E-01	**2.19E-01**
Note 1	Phenol	108-95-2	2.80E-02	None	7.84E-01	**4.90E-01**
Note 1	Naphthalene	91-20-3	8.37E-03	None	2.34E-01	**1.47E-01**
Note 1	Ethyl Benzene	100-41-4	2.91E-03	None	8.15E-02	**5.09E-02**
	Hydrogen Flouride	7664-39-3				
Note 1	Toluene	108-88-3	2.21E-02	None	6.19E-01	**3.87E-01**
	P-Xylene	106-42-3				
	Hexane	110-54-3				
Note 1	Xylenes	1330-20-7	1.78E-02	None	4.98E-01	**3.12E-01**
Note 1	o-Cresol	95-48-7	1.40E-02	None	3.92E-01	**2.45E-01**
Note 1	Styrene	100-42-5	4.81E-03	None	1.35E-01	**8.42E-02**
Note 1	Acetophenone	98-86-2	7.92E-04	None	2.22E-02	**1.39E-02**
Note 1	Dibenzofurans	132-64-9	3.34E-04	None	9.35E-03	**5.85E-03**
	Nitrobenzene	98-95-3				
Note 1	Total POMs		2.21E-02	None	0.619	**0.387**
	Total HAPs				**6.536**	**4.087**

Note 1: Emission factors taken from the document entitled "Foundry Process Emission Factors: Baseline Emissions from Automotive Foundries in Mexico"; (CERP-Mexico)

Note 2: HAPs that are particulates are captured by the Baghouse. A conservative control efficiency of 95% was utilized with 99% capture for the emission calculations.

Note 3: Max emissions from this line. Combined group limit on Shakeout of 28 tph, 128,000 tpy throughput due to max melt rate upstream

PROPOSED OPERATING SCHEDULE
22 HRS/DAY
4,580 HRS/YEAR

Form AI-S003(6) Supplement
Actual Estimated - CY2019
Emissions Calculations
East Jordan Foundry, LLC

Maximum Yearly Capacity
70,033 Tons/Year

Flow Diagram Designation
Shotblast

Maximum Hourly Capacity
28.00 Tons/Hour

Process Description:
East Jordan Foundry, LLC
Shotblast
Control Device: Baghouses H/J
SCC Code:
Control Device Outlet: gr/dscf
Airflow: acfm
Stack Gas Temperature: 100 °F

Facility Process Name:		**Criteria Pollutants**								
Shotblast										
Emission Factor Basis:		**PM**	**PM10**	**PM2.5**	**SOx**	**NOx**	**VOC**	**CO**	**Lead**	**CO_2e**
Emission Factors:	lb/ton	15.50	1.70	1.70						
(source)		Note 1	Note 2	Note 3						
Capture Efficiency		100.00	100.00	100.00						
Control Efficiency										
Building Capt. Eff										
Maximum Stack Emission Rate:										
Hourly (lb/hr)		See Controlling BH(s) for Stk Emissions								
Annual (TPY)		See Controlling BH(s) for Stk Emissions								
Maximum Fugitive Emission Rate:										
Hourly (lb/hr)										
Annual (TPY)										
Total Emission Rate:										
Hourly (lb/hr)										
Annual (TPY)										

PROPOSED OPERATING SCHEDULE
24 HRS/DAY
4,580 HRS/YEAR

Note 1: Emission factor from Bernard S. Gutow article
Note 2: Emission factor from FIRE 6.25 SCC 3-04-003-40
Note 3: Assumes $PM^{2.5}$ is equal to PM_{10}

EXAMPLE CALCULATIONS:
Maximum Stack Emission Rate (lb/hr) {PM,PM-10} =(gr/acfm) x (acfm) x (1 lb / 7000 grains) x (60 min / 1 hr)
Maximum Annual (Ton/yr) stack Emission Rates = (lb/hr emission rate) x (hours of operation per year at max. rate) x (ton/2000 lbs)
Maximum Fugitive Emission Rate (lb/hr) = ((1 - Capture Efficiency/100) x (Emission Factor) x (Melt ton/hr) x (1-(Settling Factor)/100)
Maximum Annual Fugitive Emissions (ton/yr)= (Hourly fugitive emissions (lb/hr)/ hourly Process rate (ton/hr) x (Annual process rate (tons/yr) x (ton/2000 lbs)
Total Emission Rate (lb/hr) = (Maximum Stack Emission Rate lb/hr) + (Maximum Fugitive Emission Rate lb/hr)
Total Emission Rates Annual (TPY)= (annual stack emissions (ton/yr)) + (annual fugitive emissions (ton/yr))

Form AI-S003(6) Supplement
Actual Estimated - CY2019
Emissions Calculations
East Jordan Foundry, LLC

Maximum Yearly Capacity
70,033 Tons/Year

Flow Diagram Designation
Grinding

Maximum Hourly Capacity
28.00 Tons/Hour

Process Description:
East Jordan Foundry, LLC
Grinding
Control Device: Baghouses H/J
SCC Code:
Control Device Outlet: gr/dscf
Airflow: acfm
Stack Gas Temperature: 100 °F

Facility Process Name: Grinding		Criteria Pollutants								
Emission Factor Basis:		PM	PM10	PM2.5	SOx	NOx	VOC	CO	Lead	CO_2e
Emission Factors:	lb/ton	1.60	0.005	0.005						
(source)		Note 1	Note 2	Note 3						
	Capture Efficiency	99.00	99.00	99.00						
	Control Efficiency									
	Building Capt. Eff	70.00	70.00	70.00						
Maximum Stack Emission Rate:										
Hourly (lb/hr)		See Controlling BH(s) for Stk Emissions								
Annual (TPY)		See Controlling BH(s) for Stk Emissions								
Maximum Fugitive Emission Rate:										
Hourly (lb/hr)		0.134	0.000	0.000						
Annual (TPY)		**0.168**	**0.000**	**0.000**						
Total Emission Rate:										
Hourly (lb/hr)		0.134	0.000	0.000						
Annual (TPY)		**0.168**	**0.000**	**0.000**						

PROPOSED OPERATING SCHEDULE
24 HRS/DAY
4,580 HRS/YEAR

Note 1: Emission factor from Bernard S. Gutow article
Note 2: Emission factor from FIRE 6.25 SCC 3-04-003-60
Note 3: Assumes PM2.5 is equal to PM10

EXAMPLE CALCULATIONS:
Maximum Stack Emission Rate (lb/hr) {PM,PM-10} =(gr/acfm) x (acfm) x (1 lb / 7000 grains) x (60 min / 1 hr)
Maximum Annual (Ton/yr) stack Emission Rates = (lb/hr emission rate) x (hours of operation per year at max. rate) x (ton/2000 lbs)
Maximum Fugitive Emission Rate (lb/hr) = ((1 - Capture Efficiency/100) x (Emission Factor) x (Melt ton/hr) x (1-(Settling Factor)/100)
Maximum Annual Fugitive Emissions (ton/yr)= (Hourly fugitive emissions (lb/hr)/ hourly Process rate (ton/hr) x (Annual process rate (tons/yr) x (ton/2000 lbs)
Total Emission Rate (lb/hr) = (Maximum Stack Emission Rate lb/hr) + (Maximum Fugitive Emission Rate lb/hr)
Total Emission Rates Annual (TPY)= (annual stack emissions (ton/yr)) + (annual fugitive emissions (ton/yr))

Form AI-S003(6) Supplement
Actual Estimated - CY2019
Emissions Calculations
East Jordan Foundry, LLC

Maximum Yearly Capacity
705,003 Tons/Year

Flow Diagram Designation
Sand Handling & Storage (H&S)

Maximum Hourly Capacity
390.00 Tons/Hour

Process Description:
East Jordan Foundry, LLC
Sand Handling & Storage (H&S)
Control Device: Baghouse E, F, G, H/J
SCC Code:
Control Device Outlet: gr/dscf
Airflow: acfm
Stack Gas Temperature: 100 °F

Facility Process Name:			Criteria Pollutants								
	Sand Handling & Storage (H&S)										
Emission Factor Basis:			PM	PM10	PM2.5	SOx	NOx	VOC	CO	Lead	CO_2e
Emission Factors:		lb/ton	3.60	0.54	0.54						
(source)			Note 1,3	Note 1,3	Note 2,3			Note 4			
		Capture Efficiency	99.90	99.90	99.90						
		Control Efficiency									
		Building Capt. Eff	70.00	70.00	70.00						
Maximum Stack Emission Rate:											
	Hourly (lb/hr)		See Controlling BH(s) for Stk Emissions								
	Annual (TPY)		See Controlling BH(s) for Stk Emissions								
Maximum Fugitive Emission Rate:											
	Hourly (lb/hr)		0.421	0.063	0.063						
	Annual (TPY)		**0.381**	**0.057**	**0.057**						
Total Emission Rate:											
	Hourly (lb/hr)		0.421	0.063	0.063						
	Annual (TPY)		**0.381**	**0.057**	**0.057**						

PROPOSED OPERATING SCHEDULE
22 HRS/DAY
4,580 HRS/YEAR

Note 1: Emission factor from FIRE 6.25 SCC 3-04-003-50
Note 2: Assumes PM2.5 is equal to PM10
Note 3: Includes mold making PM emissions.
Note 4: Mold making VOC emissions included with Pouring & Cooling VOC EF.

EXAMPLE CALCULATIONS:
Maximum Stack Emission Rate (lb/hr) {PM,PM-10} =(gr/acfm) x (acfm) x (1 lb / 7000 grains) x (60 min / 1 hr)
Maximum Annual (Ton/yr) stack Emission Rates = (lb/hr emission rate) x (hours of operation per year at max. rate) x (ton/2000 lbs)
Maximum Fugitive Emission Rate (lb/hr) = ((1 - Capture Efficiency/100) x (Emission Factor) x (Melt ton/hr) x (1-(Settling Factor)/100)
Maximum Annual Fugitive Emissions (ton/yr)= (Hourly fugitive emissions (lb/hr)) x (8760 hrs/yr) x (ton/2000 lbs)
Total Emission Rate (lb/hr) = (Maximum Stack Emission Rate lb/hr) + (Maximum Fugitive Emission Rate lb/hr)
Total Emission Rates Annual (TPY)= (annual stack emissions (ton/yr)) + (annual fugitive emissions (ton/yr))

Form AI-S003(6) Supplement
Actual Estimated - CY2019
Emissions Calculations
East Jordan Foundry, LLC

Maximum Yearly Capacity
345 Tons/Year

Flow Diagram Designation
Shell Coremaking

Maximum Hourly Capacity
0.48 Tons/Hour

Process Description:
East Jordan Foundry, LLC
Shell Coremaking
Control Device: Baghouse L
SCC Code:
Control Device Outlet: gr/dscf
Airflow: acfm
Stack Gas Temperature: °F

Facility Process Name:		Criteria Pollutants								
Shell Coremaking										
Emission Factor Basis:		PM	PM10	PM2.5	SOx	NOx	VOC	CO	Lead	CO_2e
Emission Factors:	lb/ton	0.35	0.35	0.11			0.2%			
(source)		Note 1	Note 1	Note 2			Note 3			
Capture Efficiency		99.00	99.00	99.00						
Control Efficiency										
Building Capt. Eff		70.00	70.00	70.00						
Maximum Stack Emission Rate:										
Hourly (lb/hr)		See Controlling BH(s) for Stk Emissions					0.001			
Annual (TPY)		See Controlling BH(s) for Stk Emissions					0.000			
Maximum Fugitive Emission Rate:										
Hourly (lb/hr)		0.001	0.001	0.000			1.824			
Annual (TPY)		0.000	0.000	0.000			0.656			
Total Emission Rate:										
Hourly (lb/hr)		0.001	0.001	0.000			1.825			
Annual (TPY)		0.0002	0.0002	0.0001			0.6558			

PROPOSED OPERATING SCHEDULE
24 HRS/DAY
4,580 HRS/YEAR

Note 1 Ohio RACM Guide, Page 2-219, Table 2.7-1, Emission Factor #15 gives uncontrolled emission factors of 0.3 lb/ton of sand mixed for mixing and 0.35 lb/ton of cores made from making the cores. No mixing will be conducted, the shell sand will be input directly into the machines. Therefore an emission factor of 0.35 lb/ton of cores made will be utilized.
Note 2 Emission factor based on USEPA PM Calculator (March 2012) PM to PM2.5 ratio and uncontrolled PM emission factor.
Note 3 %wt - Discussions w/Borden rep. Regarding Super F E19E19 MSDS

EXAMPLE CALCULATIONS:
Maximum Fugitive Emission Rate (lb/hr) = (Emission Factor) x (process weight rate (ton/hr)) x (1-(Settling Factor)/100)
Annual (TPY) Emission Rates = (lb/hr emission rate) x (1/ Maximum Hourly Process Rate (tons/hr)) x (Annual process weight rate (tons/yr))x (ton/2000)

East Jordan Foundry, LLC
HAP Emission Calculations
Shell Coremaking

HAPs	CAS #	Emission Factor %wt	Emissions lbs/hr	Emissions tons/yr	
Antimony (Sb)	7440-36-0				
Arsenic (As)	7440-38-2				
Beryllium (Be)	7440-41-7				
Cadmium (Cd)	7440-43-9				
Chromium (Cr)	7440-47-3				
Cobalt (Co)	7440-48-4				
Lead (Pb)	7439-92-1				
Manganese (Mn)	7439-96-5				
Mercury (Hg)	7439-97-6				
Nickel (Ni)	7440-02-0				
Selenium (Se)	7782-49-2				
Acetaldehyde	75-07-0				
Dimethylnaphthalenes	28804-88-8				
Cresol	1319-77-3				
Methylnaphthalenes	90-12-0				
Propionaldehyde	123-38-6				
Methylene diphenyl diisocyanate (MDI)	101-68-8				
4,4-methylenedianiline (MBA)	101-77-9				
Formaldehyde	50-00-0	0.02%	0.19	0.07	Note 3
Cumene	98-82-8				
Benzene	71-43-2				
O-Xylene	95-47-6				
M-Xylene	108-38-3				
Phenol	108-95-2	0.08%	0.77	0.28	Note 3
Naphthalene	91-20-3				
Ethyl Benzene	100-41-4				
Hydrogen Flouride	7664-39-3				
Toluene	108-88-3				
P-Xylene	106-42-3				
Hexane	110-54-3				
Xylenes	1330-20-7				
o-Cresol	95-48-7				
Styrene	100-42-5				
Acetophenone	98-86-2				
Dibenzofurans	132-64-9				
Nitrobenzene	98-95-3				
Total HAPs			9.60E-01	3.45E-01	

Form AI-S003(6) Supplement
Actual Estimated - CY2019
Emissions Calculations
East Jordan Foundry, LLC

Flow Diagram Designation
Shell Core NG

Process Description:
Shell Core NG
Control Device: None

Natural Gas Combustion

Inputs

3	= Max. Hourly Heat Input Rate (MMBtu/hr) Note 1
1020	= MMBtu/MMscf
2941.2	= Max. Hourly Fuel Usage Rate (standard cubic feet hour)
4580	= Maximum Operation (hours/year)
3.10000	= Maximum Annual Fuel Usage (MMscf)

POLLUTANT	CAS #	Note 2 Emission Factor (lb/10^6 scf)	Maximum Emissions (lbs/hr)	(tpy)
PM/PM10/PM2.5	n/a	7.6	0.02	1.18E-02
NOx	n/a	100.0	0.29	1.55E-01
CO	n/a	84.0	0.25	1.30E-01
Lead	n/a	0.0005	1.47E-06	7.75E-07
SO2	n/a	0.6	0.002	9.30E-04
VOC	n/a	5.5	0.02	8.53E-03
CO_2e	n/a	120,000	352.94	1.86E+02
Arsenic (As)	7440-38-2	2.00E-04	5.88E-07	3.10E-07
Beryllium (Be)	7440-41-7	1.20E-05	3.53E-08	1.86E-08
Cadmium (Cd)	7440-43-9	1.10E-03	3.24E-06	1.71E-06
Chromium (Cr)	7440-47-3	1.40E-03	4.12E-06	2.17E-06
Cobalt (Co)	7440-48-4	8.40E-05	2.47E-07	1.30E-07
Manganese (Mn)	7439-96-5	3.80E-04	1.12E-06	5.89E-07
Mercury (Hg)	7439-97-6	2.60E-04	7.65E-07	4.03E-07
Nickel (Ni)	7440-02-0	2.10E-03	6.18E-06	3.26E-06
Selenium (Se)	7782-49-2	2.40E-05	7.06E-08	3.72E-08
POM/2-Methylnaphthalene	91-57-6	2.40E-05	7.06E-08	3.72E-08
POM/3-Methylchloranthrene	56-49-5	1.80E-06	5.29E-09	2.79E-09
POM/7,12-Dimethylbenz(a)anthracene	57-97-6	1.60E-05	4.71E-08	2.48E-08
POM/Acenaphthene	83-32-9	1.80E-06	5.29E-09	2.79E-09
POM/Acenaphthylene	203-96-8	1.80E-06	5.29E-09	2.79E-09
POM/Anthracene	120-12-7	2.40E-06	7.06E-09	3.72E-09
POM/Benz(a)anthracene	56-55-3	1.80E-06	5.29E-09	2.79E-09
Benzene	71-43-2	2.10E-03	6.18E-06	3.26E-06
POM/Benzo(a)pyrene	50-32-8	1.20E-06	3.53E-09	1.86E-09
POM/Benzo(b)fluoranthene	205-99-2	1.20E-06	3.53E-09	1.86E-09
POM/Benzo(g,h,i)perylene	191-24-2	1.20E-06	3.53E-09	1.86E-09
POM/Benzo(k)fluoranthene	205-82-3	1.80E-06	5.29E-09	2.79E-09
POM/Chrysene	218-01-9	1.80E-06	5.29E-09	2.79E-09
POM/Dibenzo(a,h)anthracene	53-70-3	1.20E-06	3.53E-09	1.86E-09
Dichlorobenzene	25321-22-6	1.20E-03	3.53E-06	1.86E-06
POM/Fluoranthene	206-44-0	3.00E-06	8.82E-09	4.65E-09
POM/Fluorene	86-73-7	2.80E-06	8.24E-09	4.34E-09
Formaldehyde	50-00-0	7.50E-02	2.21E-04	1.16E-04
Hexane	110-54-3	1.80E+00	5.29E-03	2.79E-03
POM/Indeno(1,2,3-cd)pyrene	193-39-5	1.80E-06	5.29E-09	2.79E-09
Naphthalene	91-20-3	6.10E-04	1.79E-06	9.46E-07
POM/Phenanathrene	85-01-8	1.70E-05	5.00E-08	2.64E-08
POM/Pyrene	129-00-0	5.00E-06	1.47E-08	7.75E-09
Toluene	108-88-3	3.40E-03	1.00E-05	5.27E-06
Total POM			2.58E-07	1.36E-07
Total HAPs			5.55E-03	2.93E-03

Note 1: Two (2) machines - 0.5 MMBTU/HR each
Note 2: FROM AP-42 Fifth Edition, Supplement D, TABLE 1.4-2&3&4. 7/98 External Combustion Sources 1.4-9. Many emission factors < than specific value. In this case, specific value used to error on conservative side

EXAMPLE CALCULATIONS:
Maximum Hourly Emission = Max.hourly Fuel Usage rate (standard cubic feet hour) x (Pollutant E.F.)
Maximum Yearly Emission = Max.Hourly Emission Rate (lb/hr) x (Maximum Hours of Operation)

Form AI-S003(6) Supplement
Actual Estimated - CY2019
Emissions Calculations
East Jordan Foundry, LLC

Maximum Yearly Capacity
3,000 Tons/Year

Flow Diagram Designation
PUCB Coremaking

Maximum Hourly Capacity
12.77 Tons/Hour

Process Description:
East Jordan Foundry, LLC
PUCB Coremaking
Control Device: Baghouse L
SCC Code:
Control Device Outlet: gr/dscf
Airflow: acfm
Stack Gas Temperature: 100 °F

Facility Process Name:	Criteria Pollutants								
PUCB Coremaking									
Emission Factor Basis:	**PM**	**PM10**	**PM2.5**	**SOx**	**NOx**	**VOC**	**CO**	**Lead**	**CO_2e**
Emission Factors:	0.65	0.65	0.65						
(source)	Note 1	Note 1	Note 1						
Capture Efficiency	99.00	99.00	99.00						
Control Efficiency	98.00	98.00	98.00						
Building Capt. Eff	70.00	70.00	70.00						
Maximum Stack Emission Rate:									
Hourly (lb/hr)	See Controlling BH(s) for Stk Emissions								
Annual (TPY)	See Controlling BH(s) for Stk Emissions								
Maximum Fugitive Emission Rate:									
Hourly (lb/hr)	0.025	0.025	0.025						
Annual (TPY)	**0.003**	**0.003**	**0.003**						
Total Emission Rate:									
Hourly (lb/hr)	0.025	0.025	0.025						
Annual (TPY)	**0.003**	**0.003**	**0.003**						

PROPOSED OPERATING SCHEDULE
24 HRS/DAY
4,580 HRS/YEAR

Note 1: Ohio RACM Guide, Page 2-219, Table 2.7-1

EXAMPLE CALCULATIONS:
Maximum Fugitive Emission Rate (lb/hr) = (Emission Factor) x (process weight rate (ton/hr)) x (1-(Settling Factor)/100)
Annual (TPY) Emission Rates = (lb/hr emission rate) x (1/ Maximum Hourly Process Rate (tons/hr)) x (Annual process weight rate (tons/yr))x (ton/2000)

Form AI-S003(6) Supplement
Actual Estimated - CY2019
Emissions Calculations
East Jordan Foundry, LLC

Maximum Yearly Capacity
3,000 Tons/Year

Maximum Hourly Capacity
12.77 Tons/Hour

Flow Diagram Designation
PUCB Coremaking
East Jordan Foundry, LLC
Air Toxic Emission Estimates from PUCB Core Making
Isocure I 316 T/Isocure II 616 T

1.0%	% resin usage (of sand)
11%	% catalyst usage (of resin)
45%	% by weight Part 1
55%	% by weight Part 2

	Air Toxics	CAS #	% by Weight*	Basis	Control Efficiency %	Emission Factor (E.F.) lb/ton Note 1	Emissions Factor Basis	Maximum Emissions lb/hr	Maximum Emissions tons/yr
	Total VOCs					1.13	Note 2	14.472	1.700
	Part 1 - Pep Set X 1024								
Note 3	Phenol	108-95-2	10.00%	SDS		-		0.000	0.000
	1,2,4-Trimethylbenzene	95-63-6	5.00%	SDS		0.015		0.187	0.022
	Cumene	98-82-8	0.50%	SDS		0.001		0.019	0.002
	Part 2 - Pep Set X II 2024								
	Catalyst								
	1,2,4-Trimethylbenzene	95-63-6	1.50%	SDS		0.004		0.056	0.007
	Naphthalene	91-20-3	10.00%	SDS		0.029		0.374	0.044
	Total HAPs							0.635	0.075

Note 1: Form R Reporting of Binder Chemicals Used in Foundries indicates that for PUCB binder systems, the following is emitted:
3.25% of all Napthalene and 1,2,4 Trimethylbenzene present and 2% of Formaldehyde is emitted from Part I.
0% of all Phenol present is emitted from Part I.
0% of all MDI (and monomer) and Polymeric Dipheylmethane Diisocyanate present is emitted from Part II.
It is assumed that what remains in the core will be released and counted in the Pouring & Cooling emissions.
Note 2: Email from ASK Chemicals' Jim Archibald on May 16, 2013.
Note 3: Hazardous Air Pollutant (HAP) as defined by Section 112(b) of the Clean Air Act
Note 4: Indicates compound is a Polycylic Organic Matter (POM)

Form AI-S003(6) Supplement
Actual Estimated - CY2019
Emissions Calculations
East Jordan Foundry, LLC

Maximum Yearly Capacity
Tons/Year

Maximum Hourly Capacity
Tons/Hour

Flow Diagram Designation
Mold & Core Room Chemicals
East Jordan Foundry, LLC
VOC & HAP Emission Estimates from Mold & Core Room chemicals

	Material/TAC	CAS Number	Maximum Usage lbs/hr	Maximum Usage lbs/yr	VOC/TAC Content (% by wt)	VOC Control Efficiency (% Reduction)	Factor Basis	Emissions lb/hr	Emissions tons/yr
	Core Wash - Low VOC		5	1440	1%	0%	Material Balance	0.05	0.01
	VELVAPLASTTM TGW 053 COATING								
Note 1	Methanol	67-56-1			0.01%	0%	Material Balance	0.001	0.000
Note 1	Diethylene Glycol	111-46-6			0.01%	0%	Material Balance	0.001	0.000
Note 2	Hydrotreated light silicon	64742-47-8			1.00%	0%	Material Balance	0.05	0.01
	VELVALITE GA 2								
	No TACs emitted								
	Core Wash - Alcohol Based								
	VELVALITETM ZGA 065 Coating		0	0	25%	70%	Material Balance	0.00	0.00
Note 2	Isopropyl Alcohol	67-63-0			25%	70%	Material Balance	0.00	0.00
	IPA Thinning Solvent		0	0	100%	70%	Material Balance	0.00	0.00
Note 2	Isopropyl Alcohol	67-63-0			100%	70%	Material Balance	0.00	0.00
	Core Release - Shell Core								
	Nix Stix HCLVOC		0.1	11.68	50%	0%	Material Balance	0.05	0.00
Note 2	Acetaldehyde	75-07-0			0.1%	0%		0.0001	0.0000
	Core Release - No Bake								
	Zip Slip 125H		0	0	0.79%	0%	Material Balance	0.000	0.000
Note 2	High molecular wt. silicon	63148-62-9			100%	0%		0.00	0.00
							TOTAL	**0.10**	**0.01**

Note 1: Per ASK email, the maximum concentration of either TAC is less than 0.01%. Added 07/2019
Note 2: Maximum SDS % by weight per SDS. Added 09/2019.

PROPOSED OPERATING SCHEDULE
24 HRS/DAY
4,580 HRS/YEAR

Form AI-S003(6) Supplement
Actual Estimated - CY2019
Emissions Calculations
East Jordan Foundry, LLC

Maximum Yearly Capacity
24,421 Gal/Year Note 1

Flow Diagram Designation
Asphaltic Dip Coating

Maximum Hourly Capacity
17.23 Gal/Hour Note 1

Process Description:
East Jordan Foundry, LLC
Asphaltic Dip Coating
Control Device: None
SCC Code:
Control Device Outlet: gr/dscf
Airflow: acfm
Stack Gas Temperature: °F

Facility Process Name:		Criteria Pollutants								
	Asphaltic Dip Coating									
Emission Factor Basis:		PM	PM10	PM2.5	SOx	NOx	VOC	CO	Lead	CO_2e
Emission Factors:	lb/gal						0.47			
(source)							Note 2			
	Capture Efficiency									
	Control Efficiency									
	Building Capt. Eff									
Maximum Stack Emission Rate:										
	Hourly (lb/hr)									
	Annual (TPY)									
Maximum Fugitive Emission Rate:										
	Hourly (lb/hr)						8.099			
	Annual (TPY)						**5.739**			
Total Emission Rate:										
	Hourly (lb/hr)						8.099			
	Annual (TPY)						**5.739**			

PROPOSED OPERATING SCHEDULE
22 HRS/DAY
4,580 HRS/YEAR

Note 1: Throughput rate based on 1.077 gal coating per ton melted at maximum melting rate and assuming coating is applied to 50% of total melted thoughput
Note 2: Vulcan MC4 VOC content from EPA Method 24 analysis, no HAPs exist in this substance

EXAMPLE CALCULATIONS:
Maximum Fugitive Emission Rate (lb/hr) = (Maximum Hourly Production gal/hr) x (VOC content lb/gal)
Maximum Annual Fugitive Emissions (ton/yr)= (Maximum Annual Production gal/yr) x (VOC content lb/gal) / (2000 lb/ton)

Form AI-S003(6) Supplement
Actual Estimated - CY2019
Emissions Calculations
East Jordan Foundry, LLC

Flow Diagram Designation
Asphaltic Dip Tank Post Heater

Process Description:
Asphaltic Dip Tank Post Heater
Control Device: None

Natural Gas Combustion

Inputs	
3.64	= Max. Hourly Heat Input Rate (MMBtu/hr)
1020	= MMBtu/MMscf
3568.6	= Max. Hourly Fuel Usage Rate (standard cubic feet hour)
4580	= Maximum Operation (hours/year)
3.80000	= Maximum Annual Fuel Usage (MMscf)

POLLUTANT	CAS #	Note 1 Emission Factor (lb/10^6 scf)	Maximum Emissions (lbs/hr)	(tpy)
PM/PM10/PM2.5	n/a	7.6	0.03	1.44E-02
NOx	n/a	100.0	0.36	1.90E-01
CO	n/a	84.0	0.30	1.60E-01
Lead	n/a	0.0005	1.78E-06	9.50E-07
SO2	n/a	0.6	0.002	1.14E-03
VOC	n/a	5.5	0.02	1.05E-02
CO_2e	n/a	120,000	428.24	2.28E+02
Arsenic (As)	7440-38-2	2.00E-04	7.14E-07	3.80E-07
Beryllium (Be)	7440-41-7	1.20E-05	4.28E-08	2.28E-08
Cadmium (Cd)	7440-43-9	1.10E-03	3.93E-06	2.09E-06
Chromium (Cr)	7440-47-3	1.40E-03	5.00E-06	2.66E-06
Cobalt (Co)	7440-48-4	8.40E-05	3.00E-07	1.60E-07
Manganese (Mn)	7439-96-5	3.80E-04	1.36E-06	7.22E-07
Mercury (Hg)	7439-97-6	2.60E-04	9.28E-07	4.94E-07
Nickel (Ni)	7440-02-0	2.10E-03	7.49E-06	3.99E-06
Selenium (Se)	7782-49-2	2.40E-05	8.56E-08	4.56E-08
POM/2-Methylnaphthalene	91-57-6	2.40E-05	8.56E-08	4.56E-08
POM/3-Methylchloranthrene	56-49-5	1.80E-06	6.42E-09	3.42E-09
POM/7,12-Dimethylbenz(a)anthracene	57-97-6	1.60E-05	5.71E-08	3.04E-08
POM/Acenaphthene	83-32-9	1.80E-06	6.42E-09	3.42E-09
POM/Acenaphthylene	203-96-8	1.80E-06	6.42E-09	3.42E-09
POM/Anthracene	120-12-7	2.40E-06	8.56E-09	4.56E-09
POM/Benz(a)anthracene	56-55-3	1.80E-06	6.42E-09	3.42E-09
Benzene	71-43-2	2.10E-03	7.49E-06	3.99E-06
POM/Benzo(a)pyrene	50-32-8	1.20E-06	4.28E-09	2.28E-09
POM/Benzo(b)fluoranthene	205-99-2	1.20E-06	4.28E-09	2.28E-09
POM/Benzo(g,h,i)perylene	191-24-2	1.20E-06	4.28E-09	2.28E-09
POM/Benzo(k)fluoranthene	205-82-3	1.80E-06	6.42E-09	3.42E-09
POM/Chrysene	218-01-9	1.80E-06	6.42E-09	3.42E-09
POM/Dibenzo(a,h)anthracene	53-70-3	1.20E-06	4.28E-09	2.28E-09
Dichlorobenzene	25321-22-6	1.20E-03	4.28E-06	2.28E-06
POM/Fluoranthene	206-44-0	3.00E-06	1.07E-08	5.70E-09
POM/Fluorene	86-73-7	2.80E-06	9.99E-09	5.32E-09
Formaldehyde	50-00-0	7.50E-02	2.68E-04	1.43E-04
Hexane	110-54-3	1.80E+00	6.42E-03	3.42E-03
POM/Indeno(1,2,3-cd)pyrene	193-39-5	1.80E-06	6.42E-09	3.42E-09
Naphthalene	91-20-3	6.10E-04	2.18E-06	1.16E-06
POM/Phenanathrene	85-01-8	1.70E-05	6.07E-08	3.23E-08
POM/Pyrene	129-00-0	5.00E-06	1.78E-08	9.50E-09
Toluene	108-88-3	3.40E-03	1.21E-05	6.46E-06
Total POM			3.13E-07	1.66E-07
Total HAPs			6.74E-03	3.59E-03

Note 1: FROM AP-42 Fifth Edition, Supplement D, TABLE 1.4-2&3&4. 7/98 External Combustion Sources 1.4-9. Many emission factors < than specific value. In this case, specific value used to error on conservative side

EXAMPLE CALCULATIONS:
Maximum Hourly Emission = Max.hourly Fuel Usage rate (standard cubic feet hour) x (Pollutant E.F.)
Maximum Yearly Emission = Max.Hourly Emission Rate (lb/hr) x (Maximum Hours of Operation)

Form AI-S003(6) Supplement
Actual Estimated - CY2019
Emissions Calculations
East Jordan Foundry, LLC

Flow Diagram Designation
MUA-1

Process Description:
MUA-1
Control Device: None

Natural Gas Combustion

Inputs

7.30296	= Max. Hourly Heat Input Rate (MMBtu/hr)
1020	= MMBtu/MMscf
7159.8	= Max. Hourly Fuel Usage Rate (standard cubic feet hour)
4580	= Maximum Operation (hours/year)
7.70000	= Maximum Annual Fuel Usage (MMscf)

POLLUTANT	CAS #	Note 1 Emission Factor ($lb/10^6$ scf)	Maximum Emissions (lbs/hr)	(tpy)
PM/PM10/PM2.5	n/a	7.6	0.05	2.93E-02
NOx	n/a	100.0	0.72	3.85E-01
CO	n/a	84.0	0.60	3.23E-01
Lead	n/a	0.0005	3.58E-06	1.93E-06
SO2	n/a	0.6	0.004	2.31E-03
VOC	n/a	5.5	0.04	2.12E-02
CO_2e	n/a	120,000	859.17	4.62E+02
Arsenic (As)	7440-38-2	2.00E-04	1.43E-06	7.70E-07
Beryllium (Be)	7440-41-7	1.20E-05	8.59E-08	4.62E-08
Cadmium (Cd)	7440-43-9	1.10E-03	7.88E-06	4.24E-06
Chromium (Cr)	7440-47-3	1.40E-03	1.00E-05	5.39E-06
Cobalt (Co)	7440-48-4	8.40E-05	6.01E-07	3.23E-07
Manganese (Mn)	7439-96-5	3.80E-04	2.72E-06	1.46E-06
Mercury (Hg)	7439-97-6	2.60E-04	1.86E-06	1.00E-06
Nickel (Ni)	7440-02-0	2.10E-03	1.50E-05	8.09E-06
Selenium (Se)	7782-49-2	2.40E-05	1.72E-07	9.24E-08
POM/2-Methylnaphthalene	91-57-6	2.40E-05	1.72E-07	9.24E-08
POM/3-Methylchloranthrene	56-49-5	1.80E-06	1.29E-08	6.93E-09
POM/7,12-Dimethylbenz(a)anthracene	57-97-6	1.60E-05	1.15E-07	6.16E-08
POM/Acenaphthene	83-32-9	1.80E-06	1.29E-08	6.93E-09
POM/Acenaphthylene	203-96-8	1.80E-06	1.29E-08	6.93E-09
POM/Anthracene	120-12-7	2.40E-06	1.72E-08	9.24E-09
POM/Benz(a)anthracene	56-55-3	1.80E-06	1.29E-08	6.93E-09
Benzene	71-43-2	2.10E-03	1.50E-05	8.09E-06
POM/Benzo(a)pyrene	50-32-8	1.20E-06	8.59E-09	4.62E-09
POM/Benzo(b)fluoranthene	205-99-2	1.20E-06	8.59E-09	4.62E-09
POM/Benzo(g,h,i)perylene	191-24-2	1.20E-06	8.59E-09	4.62E-09
POM/Benzo(k)fluoranthene	205-82-3	1.80E-06	1.29E-08	6.93E-09
POM/Chrysene	218-01-9	1.80E-06	1.29E-08	6.93E-09
POM/Dibenzo(a,h)anthracene	53-70-3	1.20E-06	8.59E-09	4.62E-09
Dichlorobenzene	25321-22-6	1.20E-03	8.59E-06	4.62E-06
POM/Fluoranthene	206-44-0	3.00E-06	2.15E-08	1.16E-08
POM/Fluorene	86-73-7	2.80E-06	2.00E-08	1.08E-08
Formaldehyde	50-00-0	7.50E-02	5.37E-04	2.89E-04
Hexane	110-54-3	1.80E+00	1.29E-02	6.93E-03
POM/Indeno(1,2,3-cd)pyrene	193-39-5	1.80E-06	1.29E-08	6.93E-09
Naphthalene	91-20-3	6.10E-04	4.37E-06	2.35E-06
POM/Phenanathrene	85-01-8	1.70E-05	1.22E-07	6.55E-08
POM/Pyrene	129-00-0	5.00E-06	3.58E-08	1.93E-08
Toluene	108-88-3	3.40E-03	2.43E-05	1.31E-05
Total POM			6.27E-07	3.37E-07
Total HAPs			1.35E-02	7.27E-03

Note 1: FROM AP-42 Fifth Edition, Supplement D, TABLE 1.4-2&3&4. 7/98 External Combustion Sources 1.4-9. Many emission factors < than specific value. In this case, specific value used to error on conservative side

EXAMPLE CALCULATIONS:
Maximum Hourly Emission = Max.hourly Fuel Usage rate (standard cubic feet hour) x (Pollutant E.F.)
Maximum Yearly Emission = Max.Hourly Emission Rate (lb/hr) x (Maximum Hours of Operation)

Form AI-S003(6) Supplement
Actual Estimated - CY2019
Emissions Calculations
East Jordan Foundry, LLC

Flow Diagram Designation
MUA-2

Process Description:
MUA-2
Control Device: None

Natural Gas Combustion

Inputs

7.30296	= Max. Hourly Heat Input Rate (MMBtu/hr)
1020	= MMBtu/MMscf
7159.8	= Max. Hourly Fuel Usage Rate (standard cubic feet hour)
4580	= Maximum Operation (hours/year)
7.70000	= Maximum Annual Fuel Usage (MMscf)

POLLUTANT	CAS #	Note 1 Emission Factor (lb/10^6 scf)	Maximum Emissions (lbs/hr)	(tpy)
PM/PM10/PM2.5	n/a	7.6	0.05	2.93E-02
NOx	n/a	100.0	0.72	3.85E-01
CO	n/a	84.0	0.60	3.23E-01
Lead	n/a	0.0005	3.58E-06	1.93E-06
SO2	n/a	0.6	0.004	2.31E-03
VOC	n/a	5.5	0.04	2.12E-02
CO_2e	n/a	120,000	859.17	4.62E+02
Arsenic (As)	7440-38-2	2.00E-04	1.43E-06	7.70E-07
Beryllium (Be)	7440-41-7	1.20E-05	8.59E-08	4.62E-08
Cadmium (Cd)	7440-43-9	1.10E-03	7.88E-06	4.24E-06
Chromium (Cr)	7440-47-3	1.40E-03	1.00E-05	5.39E-06
Cobalt (Co)	7440-48-4	8.40E-05	6.01E-07	3.23E-07
Manganese (Mn)	7439-96-5	3.80E-04	2.72E-06	1.46E-06
Mercury (Hg)	7439-97-6	2.60E-04	1.86E-06	1.00E-06
Nickel (Ni)	7440-02-0	2.10E-03	1.50E-05	8.09E-06
Selenium (Se)	7782-49-2	2.40E-05	1.72E-07	9.24E-08
POM/2-Methylnaphthalene	91-57-6	2.40E-05	1.72E-07	9.24E-08
POM/3-Methylchloranthrene	56-49-5	1.80E-06	1.29E-08	6.93E-09
POM/7,12-Dimethylbenz(a)anthracene	57-97-6	1.60E-05	1.15E-07	6.16E-08
POM/Acenaphthene	83-32-9	1.80E-06	1.29E-08	6.93E-09
POM/Acenaphthylene	203-96-8	1.80E-06	1.29E-08	6.93E-09
POM/Anthracene	120-12-7	2.40E-06	1.72E-08	9.24E-09
POM/Benz(a)anthracene	56-55-3	1.80E-06	1.29E-08	6.93E-09
Benzene	71-43-2	2.10E-03	1.50E-05	8.09E-06
POM/Benzo(a)pyrene	50-32-8	1.20E-06	8.59E-09	4.62E-09
POM/Benzo(b)fluoranthene	205-99-2	1.20E-06	8.59E-09	4.62E-09
POM/Benzo(g,h,i)perylene	191-24-2	1.20E-06	8.59E-09	4.62E-09
POM/Benzo(k)fluoranthene	205-82-3	1.80E-06	1.29E-08	6.93E-09
POM/Chrysene	218-01-9	1.80E-06	1.29E-08	6.93E-09
POM/Dibenzo(a,h)anthracene	53-70-3	1.20E-06	8.59E-09	4.62E-09
Dichlorobenzene	25321-22-6	1.20E-03	8.59E-06	4.62E-06
POM/Fluoranthene	206-44-0	3.00E-06	2.15E-08	1.16E-08
POM/Fluorene	86-73-7	2.80E-06	2.00E-08	1.08E-08
Formaldehyde	50-00-0	7.50E-02	5.37E-04	2.89E-04
Hexane	110-54-3	1.80E+00	1.29E-02	6.93E-03
POM/Indeno(1,2,3-cd)pyrene	193-39-5	1.80E-06	1.29E-08	6.93E-09
Naphthalene	91-20-3	6.10E-04	4.37E-06	2.35E-06
POM/Phenanathrene	85-01-8	1.70E-05	1.22E-07	6.55E-08
POM/Pyrene	129-00-0	5.00E-06	3.58E-08	1.93E-08
Toluene	108-88-3	3.40E-03	2.43E-05	1.31E-05
Total POM			6.27E-07	3.37E-07
Total HAPs			1.35E-02	7.27E-03

Note 1: FROM AP-42 Fifth Edition, Supplement D, TABLE 1.4-2&3&4. 7/98 External Combustion Sources 1.4-9. Many emission factors < than specific value. In this case, specific value used to error on conservative side

EXAMPLE CALCULATIONS:
Maximum Hourly Emission = Max.hourly Fuel Usage rate (standard cubic feet hour) x (Pollutant E.F.)
Maximum Yearly Emission = Max.Hourly Emission Rate (lb/hr) x (Maximum Hours of Operation)

Form AI-S003(6) Supplement
Actual Estimated - CY2019
Emissions Calculations
East Jordan Foundry, LLC

Flow Diagram Designation
MUA-3

Process Description:
MUA-3
Control Device: None

Natural Gas Combustion

Inputs

7.30296	= Max. Hourly Heat Input Rate (MMBtu/hr)
1020	= MMBtu/MMscf
7159.8	= Max. Hourly Fuel Usage Rate (standard cubic feet hour)
4580	= Maximum Operation (hours/year)
7.70000	= Maximum Annual Fuel Usage (MMscf)

POLLUTANT	CAS #	Note 1 Emission Factor ($lb/10^6$ scf)	Maximum Emissions (lbs/hr)	(tpy)
PM/PM10/PM2.5	n/a	7.6	0.05	2.93E-02
NOx	n/a	100.0	0.72	3.85E-01
CO	n/a	84.0	0.60	3.23E-01
Lead	n/a	0.0005	3.58E-06	1.93E-06
SO2	n/a	0.6	0.004	2.31E-03
VOC	n/a	5.5	0.04	2.12E-02
CO_2e	n/a	120,000	859.17	4.62E+02
Arsenic (As)	7440-38-2	2.00E-04	1.43E-06	7.70E-07
Beryllium (Be)	7440-41-7	1.20E-05	8.59E-08	4.62E-08
Cadmium (Cd)	7440-43-9	1.10E-03	7.88E-06	4.24E-06
Chromium (Cr)	7440-47-3	1.40E-03	1.00E-05	5.39E-06
Cobalt (Co)	7440-48-4	8.40E-05	6.01E-07	3.23E-07
Manganese (Mn)	7439-96-5	3.80E-04	2.72E-06	1.46E-06
Mercury (Hg)	7439-97-6	2.60E-04	1.86E-06	1.00E-06
Nickel (Ni)	7440-02-0	2.10E-03	1.50E-05	8.09E-06
Selenium (Se)	7782-49-2	2.40E-05	1.72E-07	9.24E-08
POM/2-Methylnaphthalene	91-57-6	2.40E-05	1.72E-07	9.24E-08
POM/3-Methylchloranthrene	56-49-5	1.80E-06	1.29E-08	6.93E-09
POM/7,12-Dimethylbenz(a)anthracene	57-97-6	1.60E-05	1.15E-07	6.16E-08
POM/Acenaphthene	83-32-9	1.80E-06	1.29E-08	6.93E-09
POM/Acenaphthylene	203-96-8	1.80E-06	1.29E-08	6.93E-09
POM/Anthracene	120-12-7	2.40E-06	1.72E-08	9.24E-09
POM/Benz(a)anthracene	56-55-3	1.80E-06	1.29E-08	6.93E-09
Benzene	71-43-2	2.10E-03	1.50E-05	8.09E-06
POM/Benzo(a)pyrene	50-32-8	1.20E-06	8.59E-09	4.62E-09
POM/Benzo(b)fluoranthene	205-99-2	1.20E-06	8.59E-09	4.62E-09
POM/Benzo(g,h,i)perylene	191-24-2	1.20E-06	8.59E-09	4.62E-09
POM/Benzo(k)fluoranthene	205-82-3	1.80E-06	1.29E-08	6.93E-09
POM/Chrysene	218-01-9	1.80E-06	1.29E-08	6.93E-09
POM/Dibenzo(a,h)anthracene	53-70-3	1.20E-06	8.59E-09	4.62E-09
Dichlorobenzene	25321-22-6	1.20E-03	8.59E-06	4.62E-06
POM/Fluoranthene	206-44-0	3.00E-06	2.15E-08	1.16E-08
POM/Fluorene	86-73-7	2.80E-06	2.00E-08	1.08E-08
Formaldehyde	50-00-0	7.50E-02	5.37E-04	2.89E-04
Hexane	110-54-3	1.80E+00	1.29E-02	6.93E-03
POM/Indeno(1,2,3-cd)pyrene	193-39-5	1.80E-06	1.29E-08	6.93E-09
Naphthalene	91-20-3	6.10E-04	4.37E-06	2.35E-06
POM/Phenanathrene	85-01-8	1.70E-05	1.22E-07	6.55E-08
POM/Pyrene	129-00-0	5.00E-06	3.58E-08	1.93E-08
Toluene	108-88-3	3.40E-03	2.43E-05	1.31E-05
Total POM			6.27E-07	3.37E-07
Total HAPs			1.35E-02	7.27E-03

Note 1: FROM AP-42 Fifth Edition, Supplement D, TABLE 1.4-2&3&4. 7/98 External Combustion Sources 1.4-9. Many emission factors < than specific value. In this case, specific value used to error on conservative side

EXAMPLE CALCULATIONS:
Maximum Hourly Emission = Max.hourly Fuel Usage rate (standard cubic feet hour) x (Pollutant E.F.)
Maximum Yearly Emission = Max.Hourly Emission Rate (lb/hr) x (Maximum Hours of Operation)

Form AI-S003(6) Supplement
Actual Estimated - CY2019
Emissions Calculations
East Jordan Foundry, LLC

Flow Diagram Designation
MUA-4

Process Description:
MUA-4
Control Device: None

Natural Gas Combustion

Inputs

7.30296	= Max. Hourly Heat Input Rate (MMBtu/hr)
1020	= MMBtu/MMscf
7159.8	= Max. Hourly Fuel Usage Rate (standard cubic feet hour)
4580	= Maximum Operation (hours/year)
7.70000	= Maximum Annual Fuel Usage (MMscf)

POLLUTANT	CAS #	Note 1 Emission Factor ($lb/10^6$ scf)	Maximum Emissions (lbs/hr)	(tpy)
PM/PM10/PM2.5	n/a	7.6	0.05	2.93E-02
NOx	n/a	100.0	0.72	3.85E-01
CO	n/a	84.0	0.60	3.23E-01
Lead	n/a	0.0005	3.58E-06	1.93E-06
SO2	n/a	0.6	0.004	2.31E-03
VOC	n/a	5.5	0.04	2.12E-02
CO_2e	n/a	120,000	859.17	4.62E+02
Arsenic (As)	7440-38-2	2.00E-04	1.43E-06	7.70E-07
Beryllium (Be)	7440-41-7	1.20E-05	8.59E-08	4.62E-08
Cadmium (Cd)	7440-43-9	1.10E-03	7.88E-06	4.24E-06
Chromium (Cr)	7440-47-3	1.40E-03	1.00E-05	5.39E-06
Cobalt (Co)	7440-48-4	8.40E-05	6.01E-07	3.23E-07
Manganese (Mn)	7439-96-5	3.80E-04	2.72E-06	1.46E-06
Mercury (Hg)	7439-97-6	2.60E-04	1.86E-06	1.00E-06
Nickel (Ni)	7440-02-0	2.10E-03	1.50E-05	8.09E-06
Selenium (Se)	7782-49-2	2.40E-05	1.72E-07	9.24E-08
POM/2-Methylnaphthalene	91-57-6	2.40E-05	1.72E-07	9.24E-08
POM/3-Methylchloranthrene	56-49-5	1.80E-06	1.29E-08	6.93E-09
POM/7,12-Dimethylbenz(a)anthracene	57-97-6	1.60E-05	1.15E-07	6.16E-08
POM/Acenaphthene	83-32-9	1.80E-06	1.29E-08	6.93E-09
POM/Acenaphthylene	203-96-8	1.80E-06	1.29E-08	6.93E-09
POM/Anthracene	120-12-7	2.40E-06	1.72E-08	9.24E-09
POM/Benz(a)anthracene	56-55-3	1.80E-06	1.29E-08	6.93E-09
Benzene	71-43-2	2.10E-03	1.50E-05	8.09E-06
POM/Benzo(a)pyrene	50-32-8	1.20E-06	8.59E-09	4.62E-09
POM/Benzo(b)fluoranthene	205-99-2	1.20E-06	8.59E-09	4.62E-09
POM/Benzo(g,h,i)perylene	191-24-2	1.20E-06	8.59E-09	4.62E-09
POM/Benzo(k)fluoranthene	205-82-3	1.80E-06	1.29E-08	6.93E-09
POM/Chrysene	218-01-9	1.80E-06	1.29E-08	6.93E-09
POM/Dibenzo(a,h)anthracene	53-70-3	1.20E-06	8.59E-09	4.62E-09
Dichlorobenzene	25321-22-6	1.20E-03	8.59E-06	4.62E-06
POM/Fluoranthene	206-44-0	3.00E-06	2.15E-08	1.16E-08
POM/Fluorene	86-73-7	2.80E-06	2.00E-08	1.08E-08
Formaldehyde	50-00-0	7.50E-02	5.37E-04	2.89E-04
Hexane	110-54-3	1.80E+00	1.29E-02	6.93E-03
POM/Indeno(1,2,3-cd)pyrene	193-39-5	1.80E-06	1.29E-08	6.93E-09
Naphthalene	91-20-3	6.10E-04	4.37E-06	2.35E-06
POM/Phenanathrene	85-01-8	1.70E-05	1.22E-07	6.55E-08
POM/Pyrene	129-00-0	5.00E-06	3.58E-08	1.93E-08
Toluene	108-88-3	3.40E-03	2.43E-05	1.31E-05
Total POM			6.27E-07	3.37E-07
Total HAPs			1.35E-02	7.27E-03

Note 1: FROM AP-42 Fifth Edition, Supplement D, TABLE 1.4-2&3&4. 7/98 External Combustion Sources 1.4-9. Many emission factors < than specific value. In this case, specific value used to error on conservative side

EXAMPLE CALCULATIONS:
Maximum Hourly Emission = Max.hourly Fuel Usage rate (standard cubic feet hour) x (Pollutant E.F.)
Maximum Yearly Emission = Max.Hourly Emission Rate (lb/hr) x (Maximum Hours of Operation)

Form AI-S003(6) Supplement
Actual Estimated - CY2019
Emissions Calculations
East Jordan Foundry, LLC

Flow Diagram Designation
MUA-5

Process Description:
MUA-5
Control Device: None

Natural Gas Combustion

Inputs	
7.30296	= Max. Hourly Heat Input Rate (MMBtu/hr)
1020	= MMBtu/MMscf
7159.8	= Max. Hourly Fuel Usage Rate (standard cubic feet hour)
4580	= Maximum Operation (hours/year)
7.70000	= Maximum Annual Fuel Usage (MMscf)

POLLUTANT	CAS #	Note 1 Emission Factor ($lb/10^6$ scf)	Maximum Emissions (lbs/hr)	(tpy)
PM/PM10/PM2.5	n/a	7.6	0.05	2.93E-02
NOx	n/a	100.0	0.72	3.85E-01
CO	n/a	84.0	0.60	3.23E-01
Lead	n/a	0.0005	3.58E-06	1.93E-06
SO2	n/a	0.6	0.004	2.31E-03
VOC	n/a	5.5	0.04	2.12E-02
CO_2e	n/a	120,000	859.17	4.62E+02
Arsenic (As)	7440-38-2	2.00E-04	1.43E-06	7.70E-07
Beryllium (Be)	7440-41-7	1.20E-05	8.59E-08	4.62E-08
Cadmium (Cd)	7440-43-9	1.10E-03	7.88E-06	4.24E-06
Chromium (Cr)	7440-47-3	1.40E-03	1.00E-05	5.39E-06
Cobalt (Co)	7440-48-4	8.40E-05	6.01E-07	3.23E-07
Manganese (Mn)	7439-96-5	3.80E-04	2.72E-06	1.46E-06
Mercury (Hg)	7439-97-6	2.60E-04	1.86E-06	1.00E-06
Nickel (Ni)	7440-02-0	2.10E-03	1.50E-05	8.09E-06
Selenium (Se)	7782-49-2	2.40E-05	1.72E-07	9.24E-08
POM/2-Methylnaphthalene	91-57-6	2.40E-05	1.72E-07	9.24E-08
POM/3-Methylchloranthrene	56-49-5	1.80E-06	1.29E-08	6.93E-09
POM/7,12-Dimethylbenz(a)anthracene	57-97-6	1.60E-05	1.15E-07	6.16E-08
POM/Acenaphthene	83-32-9	1.80E-06	1.29E-08	6.93E-09
POM/Acenaphthylene	203-96-8	1.80E-06	1.29E-08	6.93E-09
POM/Anthracene	120-12-7	2.40E-06	1.72E-08	9.24E-09
POM/Benz(a)anthracene	56-55-3	1.80E-06	1.29E-08	6.93E-09
Benzene	71-43-2	2.10E-03	1.50E-05	8.09E-06
POM/Benzo(a)pyrene	50-32-8	1.20E-06	8.59E-09	4.62E-09
POM/Benzo(b)fluoranthene	205-99-2	1.20E-06	8.59E-09	4.62E-09
POM/Benzo(g,h,i)perylene	191-24-2	1.20E-06	8.59E-09	4.62E-09
POM/Benzo(k)fluoranthene	205-82-3	1.80E-06	1.29E-08	6.93E-09
POM/Chrysene	218-01-9	1.80E-06	1.29E-08	6.93E-09
POM/Dibenzo(a,h)anthracene	53-70-3	1.20E-06	8.59E-09	4.62E-09
Dichlorobenzene	25321-22-6	1.20E-03	8.59E-06	4.62E-06
POM/Fluoranthene	206-44-0	3.00E-06	2.15E-08	1.16E-08
POM/Fluorene	86-73-7	2.80E-06	2.00E-08	1.08E-08
Formaldehyde	50-00-0	7.50E-02	5.37E-04	2.89E-04
Hexane	110-54-3	1.80E+00	1.29E-02	6.93E-03
POM/Indeno(1,2,3-cd)pyrene	193-39-5	1.80E-06	1.29E-08	6.93E-09
Naphthalene	91-20-3	6.10E-04	4.37E-06	2.35E-06
POM/Phenanathrene	85-01-8	1.70E-05	1.22E-07	6.55E-08
POM/Pyrene	129-00-0	5.00E-06	3.58E-08	1.93E-08
Toluene	108-88-3	3.40E-03	2.43E-05	1.31E-05
Total POM			6.27E-07	3.37E-07
Total HAPs			1.35E-02	7.27E-03

Note 1: FROM AP-42 Fifth Edition, Supplement D, TABLE 1.4-2&3&4. 7/98 External Combustion Sources 1.4-9. Many emission factors < than specific value. In this case, specific value used to error on conservative side

EXAMPLE CALCULATIONS:
Maximum Hourly Emission = Max.hourly Fuel Usage rate (standard cubic feet hour) x (Pollutant E.F.)
Maximum Yearly Emission = Max.Hourly Emission Rate (lb/hr) x (Maximum Hours of Operation)

Form AI-S003(6) Supplement
Actual Estimated - CY2019
Emissions Calculations
East Jordan Foundry, LLC

Flow Diagram Designation
MUA-6

Process Description:
MUA-6
Control Device: None

Natural Gas Combustion

Inputs

7.30296	= Max. Hourly Heat Input Rate (MMBtu/hr)
1020	= MMBtu/MMscf
7159.8	= Max. Hourly Fuel Usage Rate (standard cubic feet hour)
4580	= Maximum Operation (hours/year)
7.70000	= Maximum Annual Fuel Usage (MMscf)

POLLUTANT	CAS #	Note 1 Emission Factor (lb/10^6 scf)	Maximum Emissions (lbs/hr)	(tpy)
PM/PM10/PM2.5	n/a	7.6	0.05	2.93E-02
NOx	n/a	100.0	0.72	3.85E-01
CO	n/a	84.0	0.60	3.23E-01
Lead	n/a	0.0005	3.58E-06	1.93E-06
SO2	n/a	0.6	0.004	2.31E-03
VOC	n/a	5.5	0.04	2.12E-02
CO_2e	n/a	120,000	859.17	4.62E+02
Arsenic (As)	7440-38-2	2.00E-04	1.43E-06	7.70E-07
Beryllium (Be)	7440-41-7	1.20E-05	8.59E-08	4.62E-08
Cadmium (Cd)	7440-43-9	1.10E-03	7.88E-06	4.24E-06
Chromium (Cr)	7440-47-3	1.40E-03	1.00E-05	5.39E-06
Cobalt (Co)	7440-48-4	8.40E-05	6.01E-07	3.23E-07
Manganese (Mn)	7439-96-5	3.80E-04	2.72E-06	1.46E-06
Mercury (Hg)	7439-97-6	2.60E-04	1.86E-06	1.00E-06
Nickel (Ni)	7440-02-0	2.10E-03	1.50E-05	8.09E-06
Selenium (Se)	7782-49-2	2.40E-05	1.72E-07	9.24E-08
POM/2-Methylnaphthalene	91-57-6	2.40E-05	1.72E-07	9.24E-08
POM/3-Methylchloranthrene	56-49-5	1.80E-06	1.29E-08	6.93E-09
POM/7,12-Dimethylbenz(a)anthracene	57-97-6	1.60E-05	1.15E-07	6.16E-08
POM/Acenaphthene	83-32-9	1.80E-06	1.29E-08	6.93E-09
POM/Acenaphthylene	203-96-8	1.80E-06	1.29E-08	6.93E-09
POM/Anthracene	120-12-7	2.40E-06	1.72E-08	9.24E-09
POM/Benz(a)anthracene	56-55-3	1.80E-06	1.29E-08	6.93E-09
Benzene	71-43-2	2.10E-03	1.50E-05	8.09E-06
POM/Benzo(a)pyrene	50-32-8	1.20E-06	8.59E-09	4.62E-09
POM/Benzo(b)fluoranthene	205-99-2	1.20E-06	8.59E-09	4.62E-09
POM/Benzo(g,h,i)perylene	191-24-2	1.20E-06	8.59E-09	4.62E-09
POM/Benzo(k)fluoranthene	205-82-3	1.80E-06	1.29E-08	6.93E-09
POM/Chrysene	218-01-9	1.80E-06	1.29E-08	6.93E-09
POM/Dibenzo(a,h)anthracene	53-70-3	1.20E-06	8.59E-09	4.62E-09
Dichlorobenzene	25321-22-6	1.20E-03	8.59E-06	4.62E-06
POM/Fluoranthene	206-44-0	3.00E-06	2.15E-08	1.16E-08
POM/Fluorene	86-73-7	2.80E-06	2.00E-08	1.08E-08
Formaldehyde	50-00-0	7.50E-02	5.37E-04	2.89E-04
Hexane	110-54-3	1.80E+00	1.29E-02	6.93E-03
POM/Indeno(1,2,3-cd)pyrene	193-39-5	1.80E-06	1.29E-08	6.93E-09
Naphthalene	91-20-3	6.10E-04	4.37E-06	2.35E-06
POM/Phenanathrene	85-01-8	1.70E-05	1.22E-07	6.55E-08
POM/Pyrene	129-00-0	5.00E-06	3.58E-08	1.93E-08
Toluene	108-88-3	3.40E-03	2.43E-05	1.31E-05
Total POM			6.27E-07	3.37E-07
Total HAPs			1.35E-02	7.27E-03

Note 1: FROM AP-42 Fifth Edition, Supplement D, TABLE 1.4-2&3&4. 7/98 External Combustion Sources 1.4-9. Many emission factors < than specific value. In this case, specific value used to error on conservative side

EXAMPLE CALCULATIONS:
Maximum Hourly Emission = Max.hourly Fuel Usage rate (standard cubic feet hour) x (Pollutant E.F.)
Maximum Yearly Emission = Max.Hourly Emission Rate (lb/hr) x (Maximum Hours of Operation)

Form AI-S003(6) Supplement
Actual Estimated - CY2019
Emissions Calculations
East Jordan Foundry, LLC

Flow Diagram Designation
MUA-7

Process Description:
MUA-7
Control Device: None

Natural Gas Combustion

Inputs

7.30296	= Max. Hourly Heat Input Rate (MMBtu/hr)
1020	= MMBtu/MMscf
7159.8	= Max. Hourly Fuel Usage Rate (standard cubic feet hour)
4580	= Maximum Operation (hours/year)
7.70000	= Maximum Annual Fuel Usage (MMscf)

POLLUTANT	CAS #	Note 1 Emission Factor ($lb/10^6$ scf)	Maximum Emissions (lbs/hr)	(tpy)
PM/PM10/PM2.5	n/a	7.6	0.05	2.93E-02
NOx	n/a	100.0	0.72	3.85E-01
CO	n/a	84.0	0.60	3.23E-01
Lead	n/a	0.0005	3.58E-06	1.93E-06
SO2	n/a	0.6	0.004	2.31E-03
VOC	n/a	5.5	0.04	2.12E-02
CO_2e	n/a	120,000	859.17	4.62E+02
Arsenic (As)	7440-38-2	2.00E-04	1.43E-06	7.70E-07
Beryllium (Be)	7440-41-7	1.20E-05	8.59E-08	4.62E-08
Cadmium (Cd)	7440-43-9	1.10E-03	7.88E-06	4.24E-06
Chromium (Cr)	7440-47-3	1.40E-03	1.00E-05	5.39E-06
Cobalt (Co)	7440-48-4	8.40E-05	6.01E-07	3.23E-07
Manganese (Mn)	7439-96-5	3.80E-04	2.72E-06	1.46E-06
Mercury (Hg)	7439-97-6	2.60E-04	1.86E-06	1.00E-06
Nickel (Ni)	7440-02-0	2.10E-03	1.50E-05	8.09E-06
Selenium (Se)	7782-49-2	2.40E-05	1.72E-07	9.24E-08
POM/2-Methylnaphthalene	91-57-6	2.40E-05	1.72E-07	9.24E-08
POM/3-Methylchloranthrene	56-49-5	1.80E-06	1.29E-08	6.93E-09
POM/7,12-Dimethylbenz(a)anthracene	57-97-6	1.60E-05	1.15E-07	6.16E-08
POM/Acenaphthene	83-32-9	1.80E-06	1.29E-08	6.93E-09
POM/Acenaphthylene	203-96-8	1.80E-06	1.29E-08	6.93E-09
POM/Anthracene	120-12-7	2.40E-06	1.72E-08	9.24E-09
POM/Benz(a)anthracene	56-55-3	1.80E-06	1.29E-08	6.93E-09
Benzene	71-43-2	2.10E-03	1.50E-05	8.09E-06
POM/Benzo(a)pyrene	50-32-8	1.20E-06	8.59E-09	4.62E-09
POM/Benzo(b)fluoranthene	205-99-2	1.20E-06	8.59E-09	4.62E-09
POM/Benzo(g,h,i)perylene	191-24-2	1.20E-06	8.59E-09	4.62E-09
POM/Benzo(k)fluoranthene	205-82-3	1.80E-06	1.29E-08	6.93E-09
POM/Chrysene	218-01-9	1.80E-06	1.29E-08	6.93E-09
POM/Dibenzo(a,h)anthracene	53-70-3	1.20E-06	8.59E-09	4.62E-09
Dichlorobenzene	25321-22-6	1.20E-03	8.59E-06	4.62E-06
POM/Fluoranthene	206-44-0	3.00E-06	2.15E-08	1.16E-08
POM/Fluorene	86-73-7	2.80E-06	2.00E-08	1.08E-08
Formaldehyde	50-00-0	7.50E-02	5.37E-04	2.89E-04
Hexane	110-54-3	1.80E+00	1.29E-02	6.93E-03
POM/Indeno(1,2,3-cd)pyrene	193-39-5	1.80E-06	1.29E-08	6.93E-09
Naphthalene	91-20-3	6.10E-04	4.37E-06	2.35E-06
POM/Phenanathrene	85-01-8	1.70E-05	1.22E-07	6.55E-08
POM/Pyrene	129-00-0	5.00E-06	3.58E-08	1.93E-08
Toluene	108-88-3	3.40E-03	2.43E-05	1.31E-05
Total POM			6.27E-07	3.37E-07
Total HAPs			1.35E-02	7.27E-03

Note 1: FROM AP-42 Fifth Edition, Supplement D, TABLE 1.4-2&3&4. 7/98 External Combustion Sources 1.4-9. Many emission factors < than specific value. In this case, specific value used to error on conservative side

EXAMPLE CALCULATIONS:
Maximum Hourly Emission = Max.hourly Fuel Usage rate (standard cubic feet hour) x (Pollutant E.F.)
Maximum Yearly Emission = Max.Hourly Emission Rate (lb/hr) x (Maximum Hours of Operation)

Form AI-S003(6) Supplement
Actual Estimated - CY2019
Emissions Calculations
East Jordan Foundry, LLC

Flow Diagram Designation
MUA-8

Process Description:
MUA-8
Control Device: None

Natural Gas Combustion

Inputs

7.30296	= Max. Hourly Heat Input Rate (MMBtu/hr)
1020	= MMBtu/MMscf
7159.8	= Max. Hourly Fuel Usage Rate (standard cubic feet hour)
4580	= Maximum Operation (hours/year)
7.70000	= Maximum Annual Fuel Usage (MMscf)

POLLUTANT	CAS #	Note 1 Emission Factor (lb/10^6 scf)	Maximum Emissions (lbs/hr)	(tpy)
PM/PM10/PM2.5	n/a	7.6	0.05	2.93E-02
NOx	n/a	100.0	0.72	3.85E-01
CO	n/a	84.0	0.60	3.23E-01
Lead	n/a	0.0005	3.58E-06	1.93E-06
SO2	n/a	0.6	0.004	2.31E-03
VOC	n/a	5.5	0.04	2.12E-02
CO_2e	n/a	120,000	859.17	4.62E+02
Arsenic (As)	7440-38-2	2.00E-04	1.43E-06	7.70E-07
Beryllium (Be)	7440-41-7	1.20E-05	8.59E-08	4.62E-08
Cadmium (Cd)	7440-43-9	1.10E-03	7.88E-06	4.24E-06
Chromium (Cr)	7440-47-3	1.40E-03	1.00E-05	5.39E-06
Cobalt (Co)	7440-48-4	8.40E-05	6.01E-07	3.23E-07
Manganese (Mn)	7439-96-5	3.80E-04	2.72E-06	1.46E-06
Mercury (Hg)	7439-97-6	2.60E-04	1.86E-06	1.00E-06
Nickel (Ni)	7440-02-0	2.10E-03	1.50E-05	8.09E-06
Selenium (Se)	7782-49-2	2.40E-05	1.72E-07	9.24E-08
POM/2-Methylnaphthalene	91-57-6	2.40E-05	1.72E-07	9.24E-08
POM/3-Methylchloranthrene	56-49-5	1.80E-06	1.29E-08	6.93E-09
POM/7,12-Dimethylbenz(a)anthracene	57-97-6	1.60E-05	1.15E-07	6.16E-08
POM/Acenaphthene	83-32-9	1.80E-06	1.29E-08	6.93E-09
POM/Acenaphthylene	203-96-8	1.80E-06	1.29E-08	6.93E-09
POM/Anthracene	120-12-7	2.40E-06	1.72E-08	9.24E-09
POM/Benz(a)anthracene	56-55-3	1.80E-06	1.29E-08	6.93E-09
Benzene	71-43-2	2.10E-03	1.50E-05	8.09E-06
POM/Benzo(a)pyrene	50-32-8	1.20E-06	8.59E-09	4.62E-09
POM/Benzo(b)fluoranthene	205-99-2	1.20E-06	8.59E-09	4.62E-09
POM/Benzo(g,h,i)perylene	191-24-2	1.20E-06	8.59E-09	4.62E-09
POM/Benzo(k)fluoranthene	205-82-3	1.80E-06	1.29E-08	6.93E-09
POM/Chrysene	218-01-9	1.80E-06	1.29E-08	6.93E-09
POM/Dibenzo(a,h)anthracene	53-70-3	1.20E-06	8.59E-09	4.62E-09
Dichlorobenzene	25321-22-6	1.20E-03	8.59E-06	4.62E-06
POM/Fluoranthene	206-44-0	3.00E-06	2.15E-08	1.16E-08
POM/Fluorene	86-73-7	2.80E-06	2.00E-08	1.08E-08
Formaldehyde	50-00-0	7.50E-02	5.37E-04	2.89E-04
Hexane	110-54-3	1.80E+00	1.29E-02	6.93E-03
POM/Indeno(1,2,3-cd)pyrene	193-39-5	1.80E-06	1.29E-08	6.93E-09
Naphthalene	91-20-3	6.10E-04	4.37E-06	2.35E-06
POM/Phenanathrene	85-01-8	1.70E-05	1.22E-07	6.55E-08
POM/Pyrene	129-00-0	5.00E-06	3.58E-08	1.93E-08
Toluene	108-88-3	3.40E-03	2.43E-05	1.31E-05
Total POM			6.27E-07	3.37E-07
Total HAPs			1.35E-02	7.27E-03

Note 1: FROM AP-42 Fifth Edition, Supplement D, TABLE 1.4-2&3&4. 7/98 External Combustion Sources 1.4-9. Many emission factors < than specific value. In this case, specific value used to error on conservative side

EXAMPLE CALCULATIONS:
Maximum Hourly Emission = Max.hourly Fuel Usage rate (standard cubic feet hour) x (Pollutant E.F.)
Maximum Yearly Emission = Max.Hourly Emission Rate (lb/hr) x (Maximum Hours of Operation)

Form AI-S003(6) Supplement
Actual Estimated - CY2019
Emissions Calculations
East Jordan Foundry, LLC

Flow Diagram Designation
MUA-9

Process Description:
MUA-9
Control Device: None

Natural Gas Combustion

Inputs

7.30296	= Max. Hourly Heat Input Rate (MMBtu/hr)
1020	= MMBtu/MMscf
7159.8	= Max. Hourly Fuel Usage Rate (standard cubic feet hour)
4580	= Maximum Operation (hours/year)
7.70000	= Maximum Annual Fuel Usage (MMscf)

POLLUTANT	CAS #	Note 1 Emission Factor ($lb/10^6$ scf)	Maximum Emissions (lbs/hr)	(tpy)
PM/PM10/PM2.5	n/a	7.6	0.05	2.93E-02
NOx	n/a	100.0	0.72	3.85E-01
CO	n/a	84.0	0.60	3.23E-01
Lead	n/a	0.0005	3.58E-06	1.93E-06
SO2	n/a	0.6	0.004	2.31E-03
VOC	n/a	5.5	0.04	2.12E-02
CO_2e	n/a	120,000	859.17	4.62E+02
Arsenic (As)	7440-38-2	2.00E-04	1.43E-06	7.70E-07
Beryllium (Be)	7440-41-7	1.20E-05	8.59E-08	4.62E-08
Cadmium (Cd)	7440-43-9	1.10E-03	7.88E-06	4.24E-06
Chromium (Cr)	7440-47-3	1.40E-03	1.00E-05	5.39E-06
Cobalt (Co)	7440-48-4	8.40E-05	6.01E-07	3.23E-07
Manganese (Mn)	7439-96-5	3.80E-04	2.72E-06	1.46E-06
Mercury (Hg)	7439-97-6	2.60E-04	1.86E-06	1.00E-06
Nickel (Ni)	7440-02-0	2.10E-03	1.50E-05	8.09E-06
Selenium (Se)	7782-49-2	2.40E-05	1.72E-07	9.24E-08
POM/2-Methylnaphthalene	91-57-6	2.40E-05	1.72E-07	9.24E-08
POM/3-Methylchloranthrene	56-49-5	1.80E-06	1.29E-08	6.93E-09
POM/7,12-Dimethylbenz(a)anthracene	57-97-6	1.60E-05	1.15E-07	6.16E-08
POM/Acenaphthene	83-32-9	1.80E-06	1.29E-08	6.93E-09
POM/Acenaphthylene	203-96-8	1.80E-06	1.29E-08	6.93E-09
POM/Anthracene	120-12-7	2.40E-06	1.72E-08	9.24E-09
POM/Benz(a)anthracene	56-55-3	1.80E-06	1.29E-08	6.93E-09
Benzene	71-43-2	2.10E-03	1.50E-05	8.09E-06
POM/Benzo(a)pyrene	50-32-8	1.20E-06	8.59E-09	4.62E-09
POM/Benzo(b)fluoranthene	205-99-2	1.20E-06	8.59E-09	4.62E-09
POM/Benzo(g,h,i)perylene	191-24-2	1.20E-06	8.59E-09	4.62E-09
POM/Benzo(k)fluoranthene	205-82-3	1.80E-06	1.29E-08	6.93E-09
POM/Chrysene	218-01-9	1.80E-06	1.29E-08	6.93E-09
POM/Dibenzo(a,h)anthracene	53-70-3	1.20E-06	8.59E-09	4.62E-09
Dichlorobenzene	25321-22-6	1.20E-03	8.59E-06	4.62E-06
POM/Fluoranthene	206-44-0	3.00E-06	2.15E-08	1.16E-08
POM/Fluorene	86-73-7	2.80E-06	2.00E-08	1.08E-08
Formaldehyde	50-00-0	7.50E-02	5.37E-04	2.89E-04
Hexane	110-54-3	1.80E+00	1.29E-02	6.93E-03
POM/Indeno(1,2,3-cd)pyrene	193-39-5	1.80E-06	1.29E-08	6.93E-09
Naphthalene	91-20-3	6.10E-04	4.37E-06	2.35E-06
POM/Phenanathrene	85-01-8	1.70E-05	1.22E-07	6.55E-08
POM/Pyrene	129-00-0	5.00E-06	3.58E-08	1.93E-08
Toluene	108-88-3	3.40E-03	2.43E-05	1.31E-05
Total POM			6.27E-07	3.37E-07
Total HAPs			1.35E-02	7.27E-03

Note 1: FROM AP-42 Fifth Edition, Supplement D, TABLE 1.4-2&3&4. 7/98 External Combustion Sources 1.4-9. Many emission factors < than specific value. In this case, specific value used to error on conservative side

EXAMPLE CALCULATIONS:
Maximum Hourly Emission = Max.hourly Fuel Usage rate (standard cubic feet hour) x (Pollutant E.F.)
Maximum Yearly Emission = Max.Hourly Emission Rate (lb/hr) x (Maximum Hours of Operation)

Form AI-S003(6) Supplement
Actual Estimated - CY2019
Emissions Calculations
East Jordan Foundry, LLC

Flow Diagram Designation
MUA-10

Process Description:
MUA-10
Control Device: None

Natural Gas Combustion

Inputs

5.47722	= Max. Hourly Heat Input Rate (MMBtu/hr)
1020	= MMBtu/MMscf
5369.8	= Max. Hourly Fuel Usage Rate (standard cubic feet hour)
4580	= Maximum Operation (hours/year)
5.70000	= Maximum Annual Fuel Usage (MMscf)

POLLUTANT	CAS #	Note 1 Emission Factor (lb/10^6 scf)	Maximum Emissions (lbs/hr)	(tpy)
PM/PM10/PM2.5	n/a	7.6	0.04	2.17E-02
NOx	n/a	100.0	0.54	2.85E-01
CO	n/a	84.0	0.45	2.39E-01
Lead	n/a	0.0005	2.68E-06	1.43E-06
SO2	n/a	0.6	0.003	1.71E-03
VOC	n/a	5.5	0.03	1.57E-02
CO_2e	n/a	120,000	644.38	3.42E+02
Arsenic (As)	7440-38-2	2.00E-04	1.07E-06	5.70E-07
Beryllium (Be)	7440-41-7	1.20E-05	6.44E-08	3.42E-08
Cadmium (Cd)	7440-43-9	1.10E-03	5.91E-06	3.14E-06
Chromium (Cr)	7440-47-3	1.40E-03	7.52E-06	3.99E-06
Cobalt (Co)	7440-48-4	8.40E-05	4.51E-07	2.39E-07
Manganese (Mn)	7439-96-5	3.80E-04	2.04E-06	1.08E-06
Mercury (Hg)	7439-97-6	2.60E-04	1.40E-06	7.41E-07
Nickel (Ni)	7440-02-0	2.10E-03	1.13E-05	5.99E-06
Selenium (Se)	7782-49-2	2.40E-05	1.29E-07	6.84E-08
POM/2-Methylnaphthalene	91-57-6	2.40E-05	1.29E-07	6.84E-08
POM/3-Methylchloranthrene	56-49-5	1.80E-06	9.67E-09	5.13E-09
POM/7,12-Dimethylbenz(a)anthracene	57-97-6	1.60E-05	8.59E-08	4.56E-08
POM/Acenaphthene	83-32-9	1.80E-06	9.67E-09	5.13E-09
POM/Acenaphthylene	203-96-8	1.80E-06	9.67E-09	5.13E-09
POM/Anthracene	120-12-7	2.40E-06	1.29E-08	6.84E-09
POM/Benz(a)anthracene	56-55-3	1.80E-06	9.67E-09	5.13E-09
Benzene	71-43-2	2.10E-03	1.13E-05	5.99E-06
POM/Benzo(a)pyrene	50-32-8	1.20E-06	6.44E-09	3.42E-09
POM/Benzo(b)fluoranthene	205-99-2	1.20E-06	6.44E-09	3.42E-09
POM/Benzo(g,h,i)perylene	191-24-2	1.20E-06	6.44E-09	3.42E-09
POM/Benzo(k)fluoranthene	205-82-3	1.80E-06	9.67E-09	5.13E-09
POM/Chrysene	218-01-9	1.80E-06	9.67E-09	5.13E-09
POM/Dibenzo(a,h)anthracene	53-70-3	1.20E-06	6.44E-09	3.42E-09
Dichlorobenzene	25321-22-6	1.20E-03	6.44E-06	3.42E-06
POM/Fluoranthene	206-44-0	3.00E-06	1.61E-08	8.55E-09
POM/Fluorene	86-73-7	2.80E-06	1.50E-08	7.98E-09
Formaldehyde	50-00-0	7.50E-02	4.03E-04	2.14E-04
Hexane	110-54-3	1.80E+00	9.67E-03	5.13E-03
POM/Indeno(1,2,3-cd)pyrene	193-39-5	1.80E-06	9.67E-09	5.13E-09
Naphthalene	91-20-3	6.10E-04	3.28E-06	1.74E-06
POM/Phenanathrene	85-01-8	1.70E-05	9.13E-08	4.85E-08
POM/Pyrene	129-00-0	5.00E-06	2.68E-08	1.43E-08
Toluene	108-88-3	3.40E-03	1.83E-05	9.69E-06
Total POM			4.70E-07	2.50E-07
Total HAPs			1.01E-02	5.38E-03

Note 1: FROM AP-42 Fifth Edition, Supplement D, TABLE 1.4-2&3&4. 7/98 External Combustion Sources 1.4-9. Many emission factors < than specific value. In this case, specific value used to error on conservative side

EXAMPLE CALCULATIONS:
Maximum Hourly Emission = Max.hourly Fuel Usage rate (standard cubic feet hour) x (Pollutant E.F.)
Maximum Yearly Emission = Max.Hourly Emission Rate (lb/hr) x (Maximum Hours of Operation)

Form AI-S003(6) Supplement
Actual Estimated - CY2019
Emissions Calculations
East Jordan Foundry, LLC

Flow Diagram Designation
MUA-11

Process Description:
MUA-11
Control Device: None

Natural Gas Combustion

Inputs

5.47722	= Max. Hourly Heat Input Rate (MMBtu/hr)
1020	= MMBtu/MMscf
5369.8	= Max. Hourly Fuel Usage Rate (standard cubic feet hour)
4580	= Maximum Operation (hours/year)
5.70000	= Maximum Annual Fuel Usage (MMscf)

POLLUTANT	CAS #	Note 1 Emission Factor ($lb/10^6$ scf)	Maximum Emissions (lbs/hr)	(tpy)
PM/PM10/PM2.5	n/a	7.6	0.04	2.17E-02
NOx	n/a	100.0	0.54	2.85E-01
CO	n/a	84.0	0.45	2.39E-01
Lead	n/a	0.0005	2.68E-06	1.43E-06
SO2	n/a	0.6	0.003	1.71E-03
VOC	n/a	5.5	0.03	1.57E-02
CO_2e	n/a	120,000	644.38	3.42E+02
Arsenic (As)	7440-38-2	2.00E-04	1.07E-06	5.70E-07
Beryllium (Be)	7440-41-7	1.20E-05	6.44E-08	3.42E-08
Cadmium (Cd)	7440-43-9	1.10E-03	5.91E-06	3.14E-06
Chromium (Cr)	7440-47-3	1.40E-03	7.52E-06	3.99E-06
Cobalt (Co)	7440-48-4	8.40E-05	4.51E-07	2.39E-07
Manganese (Mn)	7439-96-5	3.80E-04	2.04E-06	1.08E-06
Mercury (Hg)	7439-97-6	2.60E-04	1.40E-06	7.41E-07
Nickel (Ni)	7440-02-0	2.10E-03	1.13E-05	5.99E-06
Selenium (Se)	7782-49-2	2.40E-05	1.29E-07	6.84E-08
POM/2-Methylnaphthalene	91-57-6	2.40E-05	1.29E-07	6.84E-08
POM/3-Methylchloranthrene	56-49-5	1.80E-06	9.67E-09	5.13E-09
POM/7,12-Dimethylbenz(a)anthracene	57-97-6	1.60E-05	8.59E-08	4.56E-08
POM/Acenaphthene	83-32-9	1.80E-06	9.67E-09	5.13E-09
POM/Acenaphthylene	203-96-8	1.80E-06	9.67E-09	5.13E-09
POM/Anthracene	120-12-7	2.40E-06	1.29E-08	6.84E-09
POM/Benz(a)anthracene	56-55-3	1.80E-06	9.67E-09	5.13E-09
Benzene	71-43-2	2.10E-03	1.13E-05	5.99E-06
POM/Benzo(a)pyrene	50-32-8	1.20E-06	6.44E-09	3.42E-09
POM/Benzo(b)fluoranthene	205-99-2	1.20E-06	6.44E-09	3.42E-09
POM/Benzo(g,h,i)perylene	191-24-2	1.20E-06	6.44E-09	3.42E-09
POM/Benzo(k)fluoranthene	205-82-3	1.80E-06	9.67E-09	5.13E-09
POM/Chrysene	218-01-9	1.80E-06	9.67E-09	5.13E-09
POM/Dibenzo(a,h)anthracene	53-70-3	1.20E-06	6.44E-09	3.42E-09
Dichlorobenzene	25321-22-6	1.20E-03	6.44E-06	3.42E-06
POM/Fluoranthene	206-44-0	3.00E-06	1.61E-08	8.55E-09
POM/Fluorene	86-73-7	2.80E-06	1.50E-08	7.98E-09
Formaldehyde	50-00-0	7.50E-02	4.03E-04	2.14E-04
Hexane	110-54-3	1.80E+00	9.67E-03	5.13E-03
POM/Indeno(1,2,3-cd)pyrene	193-39-5	1.80E-06	9.67E-09	5.13E-09
Naphthalene	91-20-3	6.10E-04	3.28E-06	1.74E-06
POM/Phenanathrene	85-01-8	1.70E-05	9.13E-08	4.85E-08
POM/Pyrene	129-00-0	5.00E-06	2.68E-08	1.43E-08
Toluene	108-88-3	3.40E-03	1.83E-05	9.69E-06
Total POM			4.70E-07	2.50E-07
Total HAPs			1.01E-02	5.38E-03

Note 1: FROM AP-42 Fifth Edition, Supplement D, TABLE 1.4-2&3&4. 7/98 External Combustion Sources 1.4-9. Many emission factors < than specific value. In this case, specific value used to error on conservative side

EXAMPLE CALCULATIONS:
Maximum Hourly Emission = Max.hourly Fuel Usage rate (standard cubic feet hour) x (Pollutant E.F.)
Maximum Yearly Emission = Max.Hourly Emission Rate (lb/hr) x (Maximum Hours of Operation)

Form AI-S003(6) Supplement
Actual Estimated - CY2019
Emissions Calculations
East Jordan Foundry, LLC

Flow Diagram Designation
Various NG Sources

Process Description:
Various NG Sources
Control Device: None

Natural Gas Combustion

Inputs	
4.656	= Max. Hourly Heat Input Rate (MMBtu/hr)
1020	= MMBtu/MMscf
4564.7	= Max. Hourly Fuel Usage Rate (standard cubic feet hour)
4580	= Maximum Operation (hours/year)
4.90000	= Maximum Annual Fuel Usage (MMscf)

POLLUTANT	CAS #	Note 1 Emission Factor (lb/10^6 scf)	Maximum Emissions (lbs/hr)	(tpy)
PM/PM10/PM2.5	n/a	7.6	0.03	1.86E-02
NOx	n/a	100.0	0.46	2.45E-01
CO	n/a	84.0	0.38	2.06E-01
Lead	n/a	0.0005	2.28E-06	1.23E-06
SO2	n/a	0.6	0.003	1.47E-03
VOC	n/a	5.5	0.03	1.35E-02
CO_2e	n/a	120,000	547.76	2.94E+02
Arsenic (As)	7440-38-2	2.00E-04	9.13E-07	4.90E-07
Beryllium (Be)	7440-41-7	1.20E-05	5.48E-08	2.94E-08
Cadmium (Cd)	7440-43-9	1.10E-03	5.02E-06	2.70E-06
Chromium (Cr)	7440-47-3	1.40E-03	6.39E-06	3.43E-06
Cobalt (Co)	7440-48-4	8.40E-05	3.83E-07	2.06E-07
Manganese (Mn)	7439-96-5	3.80E-04	1.73E-06	9.31E-07
Mercury (Hg)	7439-97-6	2.60E-04	1.19E-06	6.37E-07
Nickel (Ni)	7440-02-0	2.10E-03	9.59E-06	5.15E-06
Selenium (Se)	7782-49-2	2.40E-05	1.10E-07	5.88E-08
POM/2-Methylnaphthalene	91-57-6	2.40E-05	1.10E-07	5.88E-08
POM/3-Methylchloranthrene	56-49-5	1.80E-06	8.22E-09	4.41E-09
POM/7,12-Dimethylbenz(a)anthracene	57-97-6	1.60E-05	7.30E-08	3.92E-08
POM/Acenaphthene	83-32-9	1.80E-06	8.22E-09	4.41E-09
POM/Acenaphthylene	203-96-8	1.80E-06	8.22E-09	4.41E-09
POM/Anthracene	120-12-7	2.40E-06	1.10E-08	5.88E-09
POM/Benz(a)anthracene	56-55-3	1.80E-06	8.22E-09	4.41E-09
Benzene	71-43-2	2.10E-03	9.59E-06	5.15E-06
POM/Benzo(a)pyrene	50-32-8	1.20E-06	5.48E-09	2.94E-09
POM/Benzo(b)fluoranthene	205-99-2	1.20E-06	5.48E-09	2.94E-09
POM/Benzo(g,h,i)perylene	191-24-2	1.20E-06	5.48E-09	2.94E-09
POM/Benzo(k)fluoranthene	205-82-3	1.80E-06	8.22E-09	4.41E-09
POM/Chrysene	218-01-9	1.80E-06	8.22E-09	4.41E-09
POM/Dibenzo(a,h)anthracene	53-70-3	1.20E-06	5.48E-09	2.94E-09
Dichlorobenzene	25321-22-6	1.20E-03	5.48E-06	2.94E-06
POM/Fluoranthene	206-44-0	3.00E-06	1.37E-08	7.35E-09
POM/Fluorene	86-73-7	2.80E-06	1.28E-08	6.86E-09
Formaldehyde	50-00-0	7.50E-02	3.42E-04	1.84E-04
Hexane	110-54-3	1.80E+00	8.22E-03	4.41E-03
POM/Indeno(1,2,3-cd)pyrene	193-39-5	1.80E-06	8.22E-09	4.41E-09
Naphthalene	91-20-3	6.10E-04	2.78E-06	1.49E-06
POM/Phenanathrene	85-01-8	1.70E-05	7.76E-08	4.17E-08
POM/Pyrene	129-00-0	5.00E-06	2.28E-08	1.23E-08
Toluene	108-88-3	3.40E-03	1.55E-05	8.33E-06
Total POM			4.00E-07	2.15E-07
Total HAPs			8.62E-03	4.63E-03

Note 1: FROM AP-42 Fifth Edition, Supplement D, TABLE 1.4-2&3&4. 7/98 External Combustion Sources 1.4-9. Many emission factors < than specific value. In this case, specific value used to error on conservative side

EXAMPLE CALCULATIONS:
Maximum Hourly Emission = Max.hourly Fuel Usage rate (standard cubic feet hour) x (Pollutant E.F.)
Maximum Yearly Emission = Max.Hourly Emission Rate (lb/hr) x (Maximum Hours of Operation)

Form AI-S003(6) Supplement
Actual Estimated - CY2019
Emissions Calculations
East Jordan Foundry, LLC

Flow Diagram Designation
EG-1

Process Description:
EG-1
Control Device:

Natural Gas Combustion

	Inputs	
Note 2	459.0	= Rating of Generator (hp)
	300.0	= Rating of Generator (KW)
	7000	= Brake Specific Fuel Consumption Btu/hp-hr (AP-42 Table 3.3-1, footnote a)
	3.2130	= Max. Hourly Heat Input Rate (MMBtu/hr)
		= Maximum Operation (hours/year)

POLLUTANT	CAS #	Note 1 Emission Factor (lb/MMBtu) Fuel Input	Maximum Emissions (lbs/hr)	(tpy)
PM	n/a	0.0099	0.032	
PM10/PM2.5	n/a	0.0095	0.031	
NOx	n/a	2.27	7.294	
CO	n/a	3.72	11.952	
Lead	n/a			
SO2	n/a	0.0006	0.002	
VOC	n/a	0.0296	0.095	
CO_2	n/a	110	353.43	
N_2O	n/a			
Methane	n/a	0.23	0.74	
CO_2e	n/a	115.75	371.9	
1,1,2-Trichloroethane	79-00-5	ND	ND	ND
1,3-Butadiene	106-99-0	6.63E-04	2.13E-03	
1,3-Dichloropropene	542-75-6	ND	ND	ND
Acetaldehyde	75-07-0	2.79E-03	8.96E-03	
Acrolein	107-02-8	2.63E-03	8.45E-03	
Benzene	71-43-2	1.58E-03	5.08E-03	
Carbon Tetrachloride	56-23-5	ND	ND	ND
Chlorobenzene	108-90-7	ND	ND	ND
Chloroform	67-66-3	ND	ND	ND
Ethylbenzene	100-41-4	ND	ND	ND
Ethylene Dibromide (Dibromoethane)	106-93-4	ND	ND	ND
Ethylene Dichloride (1,2-Dichloroethane)	107-06-2	ND	ND	ND
Ethylidene Dichloride (1,1-Dichloroethane)	75-34-3	ND	ND	ND
Formaldehyde	50-00-0	2.05E-02	6.59E-02	
Methanol	67-56-1	3.06E-03	9.83E-03	
Methyl Chloride (Chloromethane)	74-87-3	4.12E-05	1.32E-04	
Naphthalene	91-20-3	9.71E-05	3.12E-04	
PAH	n/a	1.41E-04	4.53E-04	
Propylene Dichloride (1,2-Dichloropropane)	78-87-5	ND	ND	ND
Styrene	100-42-5	1.19E-05	3.82E-05	
Toluene	108-88-3	5.58E-04	1.79E-03	
Vinyl Chloride	75-01-4	ND	ND	ND
Xylenes (isomers and mixture)	1330-20-7	1.95E-04	6.27E-04	
Total HAPs			1.04E-01	

Note 1: FROM AP-42 Fifth Edition, Supplement F, Ch. 3.2 TABLE 3.2-3. 8/2000. Many emission factors < than detectable value, these emission factors are represented as undetectable (ND).
Note 2: Manufacturer spec sheet

Maximum Hourly Emission = Max.hourly Fuel Usage rate (standard cubic feet hour) x (Pollutant E.F.)
Maximum Yearly Emission = Max.Hourly Emission Rate (lb/hr) x (Maximum Hours of Operation)

Form AI-S003(6) Supplement
Actual Estimated - CY2019
Emissions Calculations
East Jordan Foundry, LLC

Flow Diagram Designation
EG-2

Process Description:
EG-2
Control Device:

Natural Gas Combustion

	Inputs	
Note 2	459.0	= Rating of Generator (hp)
	300.0	= Rating of Generator (KW)
	7000	= Brake Specific Fuel Consumption Btu/hp-hr (AP-42 Table 3.3-1, footnote a)
	3.2130	= Max. Hourly Heat Input Rate (MMBtu/hr)
		= Maximum Operation (hours/year)

POLLUTANT	CAS #	Note 1 Emission Factor (lb/MMBtu) Fuel Input	Maximum Emissions (lbs/hr)	(tpy)
PM	n/a	0.0099	0.032	
PM10/PM2.5	n/a	0.0095	0.031	
NOx	n/a	2.27	7.294	
CO	n/a	3.72	11.952	
Lead	n/a			
SO2	n/a	0.0006	0.002	
VOC	n/a	0.0296	0.095	
CO_2	n/a	110	353.43	
N_2O	n/a			
Methane	n/a	0.23	0.74	
CO_2e	n/a	115.75	371.9	
1,1,2-Trichloroethane	79-00-5	ND	ND	ND
1,3-Butadiene	106-99-0	6.63E-04	2.13E-03	
1,3-Dichloropropene	542-75-6	ND	ND	ND
Acetaldehyde	75-07-0	2.79E-03	8.96E-03	
Acrolein	107-02-8	2.63E-03	8.45E-03	
Benzene	71-43-2	1.58E-03	5.08E-03	
Carbon Tetrachloride	56-23-5	ND	ND	ND
Chlorobenzene	108-90-7	ND	ND	ND
Chloroform	67-66-3	ND	ND	ND
Ethylbenzene	100-41-4	ND	ND	ND
Ethylene Dibromide (Dibromoethane)	106-93-4	ND	ND	ND
Ethylene Dichloride (1,2-Dichloroethane)	107-06-2	ND	ND	ND
Ethylidene Dichloride (1,1-Dichloroethane)	75-34-3	ND	ND	ND
Formaldehyde	50-00-0	2.05E-02	6.59E-02	
Methanol	67-56-1	3.06E-03	9.83E-03	
Methyl Chloride (Chloromethane)	74-87-3	4.12E-05	1.32E-04	
Naphthalene	91-20-3	9.71E-05	3.12E-04	
PAH	n/a	1.41E-04	4.53E-04	
Propylene Dichloride (1,2-Dichloropropane)	78-87-5	ND	ND	ND
Styrene	100-42-5	1.19E-05	3.82E-05	
Toluene	108-88-3	5.58E-04	1.79E-03	
Vinyl Chloride	75-01-4	ND	ND	ND
Xylenes (isomers and mixture)	1330-20-7	1.95E-04	6.27E-04	
Total HAPs			1.04E-01	

Note 1: FROM AP-42 Fifth Edition, Supplement F, Ch. 3.2 TABLE 3.2-3. 8/2000. Many emission factors < than detectable value, these emission factors are represented as undetectable (ND).
Note 2: Manufacturer spec sheet

Maximum Hourly Emission = Max.hourly Fuel Usage rate (standard cubic feet hour) x (Pollutant E.F.)
Maximum Yearly Emission = Max.Hourly Emission Rate (lb/hr) x (Maximum Hours of Operation)

Form AI-S003(6) Supplement
Actual Estimated - CY2019
Emissions Calculations
East Jordan Foundry, LLC

Flow Diagram Designation
Road Fug. Dust
East Jordan Foundry, LLC
Paved Road Calculation - Projected

AP-42 (1/11 Version) Ch. 13.2.1
Paved Road Calculation - Projected E = k * (sL/2)^0.65 * (W/3)^1.5

E = PM-10 emissions factor (lb/VMT)
k = Base emission factor (lb/VMT) - PM-10
sL = Silt loading (g/m^2)
W = Mean vehicle weight (tons)

0.4 Round trip distance per vehicle (mi)

Paved Roadways	Number of Round Trips/day	k lb/VMT	sL g/m^2	W tons	E lb/VMT	Control Efficiency	Miles Traveled Projected Miles/Year	Emissions (TPY) PM	PM10	PM2.5 [f]	Emissions (lb/hr) PM	PM10	PM2.5
	Note 2		Note 1			Note 4	Note 3				Note 5	Note 5	Note 5,6
Employee Parking Lot -Cars PM	300	0.082	9.7	2.5	0.17	75	120.0	0.003			0.001		
Employee Parking Lot Cars PM-10	300	0.016	9.7	2.5	0.03	75	120.0		0.001			0.000	
Employee Parking Lot Cars PM-2.5	300	0.016	9.7	2.5	0.03	75	120.0			0.001			0.000
Shipping Castings-PM	26	0.082	9.7	40	11.14	75	10.4	0.014			0.006		
Shipping Castings-PM-10	26	0.016	9.7	40	2.17	75	10.4		0.003			0.001	
Shipping Castings-PM-2.5	26	0.016	9.7	40	2.17	75	10.4			0.003			0.001
Receiving Scrap Metal- PM	26	0.082	9.7	40	11.14	75	10.4	0.014			0.006		
Receiving Scrap Metal PM-10	26	0.016	9.7	40	2.17	75	10.4		0.003			0.001	
Receiving Scrap Metal PM-2.5	26	0.016	9.7	40	2.17	75	10.4			0.003			0.001
Receiving Sand- PM	7	0.082	9.7	40	11.14	75	2.8	0.004			0.002		
Receiving Sand- PM-10	7	0.016	9.7	40	2.17	75	2.8		0.001			0.000	
Receiving Sand- PM-2.5	7	0.016	9.7	40	2.17	75	2.8			0.001			0.000
Receiving Other Materials- PM	5	0.082	9.7	40	11.14	75	2.0	0.003			0.001		
Receiving Other Materials- PM-10	5	0.016	9.7	40	2.17	75	2.0		0.001			0.000	
Receiving Other Materials- PM-2.5	5	0.016	9.7	40	2.17	75	2.0			0.001			0.000
Removing Sand Pit Waste -PM	2	0.082	9.7	30	7.24	75	0.8	0.001			0.000		
Removing Sand Pit Waste -PM-10	2	0.016	9.7	30	1.41	75	0.8		0.000			0.000	
Removing Sand Pit Waste -PM-2.5	2	0.016	9.7	30	1.41	75	0.8			0.000			0.000
							TOTAL:	**0.039**	**0.008**	**0.008**	**0.017**	**0.003**	**0.003**

Note 1: Numbers from AP-42 (Version 1/11) Ch.13.2.1 Table 13.2.1-1
Note 2: Emissions estimate based on figures provided by EJIW and on Maximum production levels. Estimate high to be conservative.
Note 3: Emissions based on potential metal poured of 180,000 tpy
Note 4: Control efficiency of 75% for street sweeping from RACM, Tabe 2.1.1-3 Ohio EPA
Note 5: Lb/hr emission rate calculated by multiplying the tpy emission rate by 2000 lbs/ton and dividing by number of Maximum operating rate hours/yr.
Note 6: Assumed PM2.5 is equal to PM10

PROPOSED OPERATING SCHEDULE
24 hours/day
4,580 hours/year

Form AI-S003(6) Supplement
Actual Estimated - CY2019
Emissions Calculations
East Jordan Foundry, LLC

Maximum Yearly Capacity
MMCF/Year

Flow Diagram Designation
Waste Sand Dust Handling

Maximum Hourly Capacity
MMCF/Hour

Process Description:
East Jordan Foundry, LLC
Waste Sand Dust Handling
Control Device: Baghouse H/J
SCC Code:
Control Device Outlet: gr/dscf
Airflow: acfm
Stack Gas Temperature: 100 °F

Facility Process Name:	Criteria Pollutants								
Waste Sand Dust Handling									
Emission Factor Basis:	**PM**	**PM10**	**PM2.5**	**SOx**	**NOx**	**VOC**	**CO**	**Lead**	**CO_2e**
Emission Factors:									
(source)	Note 1	Note 1	Note 1						
Capture Efficiency									
Control Efficiency									
Building Capt. Eff									
Maximum Stack Emission Rate:									
Hourly (lb/hr)	See Controlling BH(s) for Stk Emissions								
Annual (TPY)	See Controlling BH(s) for Stk Emissions								
Maximum Fugitive Emission Rate:									
Hourly (lb/hr)									
Annual (TPY)									
Total Emission Rate:									
Hourly (lb/hr)									
Annual (TPY)									

PROPOSED OPERATING SCHEDULE
24 HRS/DAY
4,580 HRS/YEAR

Note 1: No fugitives are expected from the operation.

EXAMPLE CALCULATIONS:
Maximum Stack Emission Rate (lb/hr) {PM,PM-10} =(gr/acfm) x (acfm) x (1 lb / 7000 grains) x (60 min / 1 hr)
Maximum Annual (Ton/yr) stack Emission Rates = (lb/hr emission rate) x (hours of operation per year at max. rate) x (ton/2000 lbs)
Maximum Fugitive Emission Rate (lb/hr) = ((1 - Capture Efficiency/100) x (Emission Factor) x (Melt ton/hr) x (1-(Settling Factor)/100)
Maximum Annual Fugitive Emissions (ton/yr)= (Hourly fugitive emissions (lb/hr)/ hourly Process rate (ton/hr) x (Annual process rate (tons/yr) x (ton/2000 lbs)
Total Emission Rate (lb/hr) = (Maximum Stack Emission Rate lb/hr) + (Maximum Fugitive Emission Rate lb/hr)
Total Emission Rates Annual (TPY)= (annual stack emissions (ton/yr)) + (annual fugitive emissions (ton/yr))

Form AI-S003(6) Supplement
Actual Estimated - CY2019
Emissions Calculations
East Jordan Foundry, LLC

Maximum Yearly Capacity
MMCF/Year

Flow Diagram Designation
Baghouses AB

Maximum Hourly Capacity
MMCF/Hour

Process Description:
East Jordan Foundry, LLC
Baghouses AB
Control Device: Baghouse AB
SCC Code:
Control Device Outlet: 0.0017 gr/dscf
Airflow: 168,000 acfm
Stack Gas Temperature: 100 °F

Facility Process Name:	**Criteria Pollutants**								
Baghouses AB									
Emission Factor Basis:	**PM**	**PM10**	**PM2.5**	**SOx**	**NOx**	**VOC**	**CO**	**Lead**	**CO_2e**
Emission Factors:									
(source)									
Capture Efficiency									
Control Efficiency									
Building Capt. Eff									
Maximum Stack Emission Rate:									
Hourly (lb/hr)	2.317	2.317	2.317						
Annual (TPY)	**5.306**	**5.306**	**5.306**						
Maximum Fugitive Emission Rate:									
Hourly (lb/hr)									
Annual (TPY)									
Total Emission Rate:									
Hourly (lb/hr)	2.317	2.317	2.317						
Annual (TPY)	**5.306**	**5.306**	**5.306**						

PROPOSED OPERATING SCHEDULE
24 HRS/DAY
4,580 HRS/YEAR

Note 1: These baghouses control EIF Melting, Pouring & Cooling, Charge Handling, and Hot Metal Transfer

EXAMPLE CALCULATIONS:
Maximum Stack Emission Rate (lb/hr) {PM,PM-10} =(gr/acfm) x (acfm) x (1 lb / 7000 grains) x (60 min / 1 hr)
Maximum Annual (Ton/yr) stack Emission Rates = (lb/hr emission rate) x (hours of operation per year at max. rate) x (ton/2000 lbs)
Maximum Fugitive Emission Rate (lb/hr) = ((1 - Capture Efficiency/100) x (Emission Factor) x (Melt ton/hr) x (1-(Settling Factor)/100)
Maximum Annual Fugitive Emissions (ton/yr)= (Hourly fugitive emissions (lb/hr)/ hourly Process rate (ton/hr) x (Annual process rate (tons/yr) x (ton/2000 lbs)
Total Emission Rate (lb/hr) = (Maximum Stack Emission Rate lb/hr) + (Maximum Fugitive Emission Rate lb/hr)
Total Emission Rates Annual (TPY)= (annual stack emissions (ton/yr)) + (annual fugitive emissions (ton/yr))

Form AI-S003(6) Supplement
Actual Estimated - CY2019
Emissions Calculations
East Jordan Foundry, LLC

Maximum Yearly Capacity
MMCF/Year

Flow Diagram Designation
Baghouse C

Maximum Hourly Capacity
MMCF/Hour

Process Description:
East Jordan Foundry, LLC
Baghouse C
Control Device: Baghouse C
SCC Code:
Control Device Outlet: 0.0014 gr/dscf
Airflow: 105,000 acfm
Stack Gas Temperature: 100 °F

Facility Process Name:	Criteria Pollutants								
Baghouse C									
Emission Factor Basis:	PM	PM10	PM2.5	SOx	NOx	VOC	CO	Lead	CO_2e
Emission Factors:									
(source)									
Capture Efficiency									
Control Efficiency									
Building Capt. Eff									
Maximum Stack Emission Rate:									
Hourly (lb/hr)	1.193	1.193	1.193						
Annual (TPY)	2.731	2.731	2.731						
Maximum Fugitive Emission Rate:									
Hourly (lb/hr)									
Annual (TPY)									
Total Emission Rate:									
Hourly (lb/hr)	1.193	1.193	1.193						
Annual (TPY)	2.731	2.731	2.731						

PROPOSED OPERATING SCHEDULE
22 HRS/DAY
4,580 HRS/YEAR

Note 1: This baghouse controls portions of Shakeout

EXAMPLE CALCULATIONS:
Maximum Stack Emission Rate (lb/hr) {PM,PM-10} =(gr/acfm) x (acfm) x (1 lb / 7000 grains) x (60 min / 1 hr)
Maximum Annual (Ton/yr) stack Emission Rates = (lb/hr emission rate) x (hours of operation per year at max. rate) x (ton/2000 lbs)
Maximum Fugitive Emission Rate (lb/hr) = ((1 - Capture Efficiency/100) x (Emission Factor) x (Melt ton/hr) x (1-(Settling Factor)/100)
Maximum Annual Fugitive Emissions (ton/yr)= (Hourly fugitive emissions (lb/hr)/ hourly Process rate (ton/hr) x (Annual process rate (tons/yr) x (ton/2000 lbs)
Total Emission Rate (lb/hr) = (Maximum Stack Emission Rate lb/hr) + (Maximum Fugitive Emission Rate lb/hr)
Total Emission Rates Annual (TPY)= (annual stack emissions (ton/yr)) + (annual fugitive emissions (ton/yr))

Form AI-S003(6) Supplement
Actual Estimated - CY2019
Emissions Calculations
East Jordan Foundry, LLC

Maximum Yearly Capacity
MMCF/Year

Flow Diagram Designation
Baghouse D

Maximum Hourly Capacity
MMCF/Hour

Process Description:
East Jordan Foundry, LLC
Baghouse D
Control Device: Baghouse D
SCC Code:
Control Device Outlet: 0.0014 gr/dscf
Airflow: 84,000 acfm
Stack Gas Temperature: 100 °F

Facility Process Name:	Criteria Pollutants								
Baghouse D									
Emission Factor Basis:	PM	PM10	PM2.5	SOx	NOx	VOC	CO	Lead	CO_2e
Emission Factors:									
(source)									
Capture Efficiency									
Control Efficiency									
Building Capt. Eff									
Maximum Stack Emission Rate:									
Hourly (lb/hr)	0.954	0.954	0.954						
Annual (TPY)	2.185	2.185	2.185						
Maximum Fugitive Emission Rate:									
Hourly (lb/hr)									
Annual (TPY)									
Total Emission Rate:									
Hourly (lb/hr)	0.954	0.954	0.954						
Annual (TPY)	2.185	2.185	2.185						

PROPOSED OPERATING SCHEDULE
24 HRS/DAY
4,580 HRS/YEAR

Note 1: This baghouse controls portions of Cooling and Shakeout

EXAMPLE CALCULATIONS:
Maximum Stack Emission Rate (lb/hr) {PM,PM-10} =(gr/acfm) x (acfm) x (1 lb / 7000 grains) x (60 min / 1 hr)
Maximum Annual (Ton/yr) stack Emission Rates = (lb/hr emission rate) x (hours of operation per year at max. rate) x (ton/2000 lbs)
Maximum Fugitive Emission Rate (lb/hr) = ((1 - Capture Efficiency/100) x (Emission Factor) x (Melt ton/hr) x (1-(Settling Factor)/100)
Maximum Annual Fugitive Emissions (ton/yr)= (Hourly fugitive emissions (lb/hr)/ hourly Process rate (ton/hr) x (Annual process rate (tons/yr) x (ton/2000 lbs)
Total Emission Rate (lb/hr) = (Maximum Stack Emission Rate lb/hr) + (Maximum Fugitive Emission Rate lb/hr)
Total Emission Rates Annual (TPY)= (annual stack emissions (ton/yr)) + (annual fugitive emissions (ton/yr))

Form AI-S003(6) Supplement
Actual Estimated - CY2019
Emissions Calculations
East Jordan Foundry, LLC

Maximum Yearly Capacity
MMCF/Year

Flow Diagram Designation
Baghouse E

Maximum Hourly Capacity
MMCF/Hour

Process Description:
East Jordan Foundry, LLC
Baghouse E
Control Device: Baghouse E
SCC Code:
Control Device Outlet: 0.0006 gr/dscf
Airflow: 64,000 acfm
Stack Gas Temperature: 100 °F

Facility Process Name:	Criteria Pollutants								
Baghouse E									
Emission Factor Basis:	PM	PM10	PM2.5	SOx	NOx	VOC	CO	Lead	CO_2e
Emission Factors:									
(source)									
Capture Efficiency									
Control Efficiency									
Building Capt. Eff									
Maximum Stack Emission Rate:									
Hourly (lb/hr)	0.312	0.312	0.312						
Annual (TPY)	**0.713**	**0.713**	**0.713**						
Maximum Fugitive Emission Rate:									
Hourly (lb/hr)									
Annual (TPY)									
Total Emission Rate:									
Hourly (lb/hr)	0.312	0.312	0.312						
Annual (TPY)	**0.713**	**0.713**	**0.713**						

PROPOSED OPERATING SCHEDULE
22 HRS/DAY
4,580 HRS/YEAR

Note 1: This baghouse controls Charge Handling, Shakeout, and Sand Handling & Storage

EXAMPLE CALCULATIONS:
Maximum Stack Emission Rate (lb/hr) {PM,PM-10} =(gr/acfm) x (acfm) x (1 lb / 7000 grains) x (60 min / 1 hr)
Maximum Annual (Ton/yr) stack Emission Rates = (lb/hr emission rate) x (hours of operation per year at max. rate) x (ton/2000 lbs)
Maximum Fugitive Emission Rate (lb/hr) = ((1 - Capture Efficiency/100) x (Emission Factor) x (Melt ton/hr) x (1-(Settling Factor)/100)
Maximum Annual Fugitive Emissions (ton/yr)= (Hourly fugitive emissions (lb/hr)/ hourly Process rate (ton/hr) x (Annual process rate (tons/yr) x (ton/2000 lbs)
Total Emission Rate (lb/hr) = (Maximum Stack Emission Rate lb/hr) + (Maximum Fugitive Emission Rate lb/hr)
Total Emission Rates Annual (TPY)= (annual stack emissions (ton/yr)) + (annual fugitive emissions (ton/yr))

Form AI-S003(6) Supplement
Actual Estimated - CY2019
Emissions Calculations
East Jordan Foundry, LLC

Maximum Yearly Capacity
MMCF/Year

Flow Diagram Designation
Baghouse F

Maximum Hourly Capacity
MMCF/Hour

Process Description:
East Jordan Foundry, LLC
Baghouse F
Control Device: Baghouse F
SCC Code:
Control Device Outlet: 0.0006 gr/dscf
Airflow: 64,000 acfm
Stack Gas Temperature: 100 °F

Facility Process Name:	Criteria Pollutants								
Baghouse F									
Emission Factor Basis:	**PM**	**PM10**	**PM2.5**	**SOx**	**NOx**	**VOC**	**CO**	**Lead**	**CO_2e**
Emission Factors:									
(source)									
Capture Efficiency									
Control Efficiency									
Building Capt. Eff									
Maximum Stack Emission Rate:									
Hourly (lb/hr)	0.312	0.312	0.312						
Annual (TPY)	**0.713**	**0.713**	**0.713**						
Maximum Fugitive Emission Rate:									
Hourly (lb/hr)									
Annual (TPY)									
Total Emission Rate:									
Hourly (lb/hr)	0.312	0.312	0.312						
Annual (TPY)	**0.713**	**0.713**	**0.713**						

PROPOSED OPERATING SCHEDULE
22 HRS/DAY
4,580 HRS/YEAR

Note 1: This baghouse controls Sand Handling & Storage

EXAMPLE CALCULATIONS:
Maximum Stack Emission Rate (lb/hr) {PM,PM-10} =(gr/acfm) x (acfm) x (1 lb / 7000 grains) x (60 min / 1 hr)
Maximum Annual (Ton/yr) stack Emission Rates = (lb/hr emission rate) x (hours of operation per year at max. rate) x (ton/2000 lbs)
Maximum Fugitive Emission Rate (lb/hr) = ((1 - Capture Efficiency/100) x (Emission Factor) x (Melt ton/hr) x (1-(Settling Factor)/100)
Maximum Annual Fugitive Emissions (ton/yr)= (Hourly fugitive emissions (lb/hr)/ hourly Process rate (ton/hr) x (Annual process rate (tons/yr) x (ton/2000 lbs)
Total Emission Rate (lb/hr) = (Maximum Stack Emission Rate lb/hr) + (Maximum Fugitive Emission Rate lb/hr)
Total Emission Rates Annual (TPY)= (annual stack emissions (ton/yr)) + (annual fugitive emissions (ton/yr))

Form AI-S003(6) Supplement
Actual Estimated - CY2019
Emissions Calculations
East Jordan Foundry, LLC

Maximum Yearly Capacity
MMCF/Year

Flow Diagram Designation
Baghouse G

Maximum Hourly Capacity
MMCF/Hour

Process Description:
East Jordan Foundry, LLC
Baghouse G
Control Device: Baghouse G
SCC Code:
Control Device Outlet: 0.0011 gr/dscf
Airflow: 42,000 acfm
Stack Gas Temperature: 100 °F

Facility Process Name:	Criteria Pollutants								
Baghouse G									
Emission Factor Basis:	**PM**	**PM10**	**PM2.5**	**SOx**	**NOx**	**VOC**	**CO**	**Lead**	**CO_2e**
Emission Factors:									
(source)									
Capture Efficiency									
Control Efficiency									
Building Capt. Eff									
Maximum Stack Emission Rate:									
Hourly (lb/hr)	0.375	0.375	0.375						
Annual (TPY)	**0.858**	**0.858**	**0.858**						
Maximum Fugitive Emission Rate:									
Hourly (lb/hr)									
Annual (TPY)									
Total Emission Rate:									
Hourly (lb/hr)	0.375	0.375	0.375						
Annual (TPY)	**0.858**	**0.858**	**0.858**						

PROPOSED OPERATING SCHEDULE
22 HRS/DAY
4,580 HRS/YEAR

Note 1: This baghouse controls Sand Handling & Storage

EXAMPLE CALCULATIONS:
Maximum Stack Emission Rate (lb/hr) {PM,PM-10} =(gr/acfm) x (acfm) x (1 lb / 7000 grains) x (60 min / 1 hr)
Maximum Annual (Ton/yr) stack Emission Rates = (lb/hr emission rate) x (hours of operation per year at max. rate) x (ton/2000 lbs)
Maximum Fugitive Emission Rate (lb/hr) = ((1 - Capture Efficiency/100) x (Emission Factor) x (Melt ton/hr) x (1-(Settling Factor)/100)
Maximum Annual Fugitive Emissions (ton/yr)= (Hourly fugitive emissions (lb/hr)/ hourly Process rate (ton/hr) x (Annual process rate (tons/yr) x (ton/2000 lbs)
Total Emission Rate (lb/hr) = (Maximum Stack Emission Rate lb/hr) + (Maximum Fugitive Emission Rate lb/hr)
Total Emission Rates Annual (TPY)= (annual stack emissions (ton/yr)) + (annual fugitive emissions (ton/yr))

Form AI-S003(6) Supplement
Actual Estimated - CY2019
Emissions Calculations
East Jordan Foundry, LLC

Maximum Yearly Capacity
MMCF/Year

Flow Diagram Designation
Baghouses HJ

Maximum Hourly Capacity
MMCF/Hour

Process Description:
East Jordan Foundry, LLC
Baghouses HJ
Control Device: Baghouse HJ
SCC Code:
Control Device Outlet: 0.0009 gr/dscf
Airflow: 210,000 acfm
Stack Gas Temperature: 100 °F

Facility Process Name:	**Criteria Pollutants**								
Baghouses HJ									
Emission Factor Basis:	**PM**	**PM10**	**PM2.5**	**SOx**	**NOx**	**VOC**	**CO**	**Lead**	**CO_2e**
Emission Factors:									
(source)									
Capture Efficiency									
Control Efficiency									
Building Capt. Eff									
Maximum Stack Emission Rate:									
Hourly (lb/hr)	1.533	1.533	1.533						
Annual (TPY)	**3.511**	**3.511**	**3.511**						
Maximum Fugitive Emission Rate:									
Hourly (lb/hr)									
Annual (TPY)									
Total Emission Rate:									
Hourly (lb/hr)	1.533	1.533	1.533						
Annual (TPY)	**3.511**	**3.511**	**3.511**						

PROPOSED OPERATING SCHEDULE
24 HRS/DAY
4,580 HRS/YEAR

Note 1: These baghouses control Charge Handling, Sand Handling & Stroage, Grinding, Shotblast, and Waste Sand Dust Handling

EXAMPLE CALCULATIONS:
Maximum Stack Emission Rate (lb/hr) {PM,PM-10} =(gr/acfm) x (acfm) x (1 lb / 7000 grains) x (60 min / 1 hr)
Maximum Annual (Ton/yr) stack Emission Rates = (lb/hr emission rate) x (hours of operation per year at max. rate) x (ton/2000 lbs)
Maximum Fugitive Emission Rate (lb/hr) = ((1 - Capture Efficiency/100) x (Emission Factor) x (Melt ton/hr) x (1-(Settling Factor)/100)
Maximum Annual Fugitive Emissions (ton/yr)= (Hourly fugitive emissions (lb/hr)/ hourly Process rate (ton/hr) x (Annual process rate (tons/yr) x (ton/2000 lbs)
Total Emission Rate (lb/hr) = (Maximum Stack Emission Rate lb/hr) + (Maximum Fugitive Emission Rate lb/hr)
Total Emission Rates Annual (TPY)= (annual stack emissions (ton/yr)) + (annual fugitive emissions (ton/yr))

Form AI-S003(6) Supplement
Actual Estimated - CY2019
Emissions Calculations
East Jordan Foundry, LLC

Maximum Yearly Capacity
MMCF/Year

Flow Diagram Designation
Baghouse K

Maximum Hourly Capacity
MMCF/Hour

Process Description:
East Jordan Foundry, LLC
Baghouse K
Control Device: Baghouse K
SCC Code:
Control Device Outlet: 0.0001 gr/dscf
Airflow: 21,000 acfm
Stack Gas Temperature: 100 °F

Facility Process Name:	Criteria Pollutants								
Baghouse K									
Emission Factor Basis:	PM	PM10	PM2.5	SOx	NOx	VOC	CO	Lead	CO_2e
Emission Factors:									
(source)									
Capture Efficiency									
Control Efficiency									
Building Capt. Eff									
Maximum Stack Emission Rate:									
Hourly (lb/hr)	0.015	0.015	0.015						
Annual (TPY)	**0.035**	**0.035**	**0.035**						
Maximum Fugitive Emission Rate:									
Hourly (lb/hr)									
Annual (TPY)									
Total Emission Rate:									
Hourly (lb/hr)	0.015	0.015	0.015						
Annual (TPY)	**0.035**	**0.035**	**0.035**						

PROPOSED OPERATING SCHEDULE
22 HRS/DAY
4,580 HRS/YEAR

Note 1: This baghouse controls Ladle Repair

EXAMPLE CALCULATIONS:
Maximum Stack Emission Rate (lb/hr) {PM,PM-10} =(gr/acfm) x (acfm) x (1 lb / 7000 grains) x (60 min / 1 hr)
Maximum Annual (Ton/yr) stack Emission Rates = (lb/hr emission rate) x (hours of operation per year at max. rate) x (ton/2000 lbs)
Maximum Fugitive Emission Rate (lb/hr) = ((1 - Capture Efficiency/100) x (Emission Factor) x (Melt ton/hr) x (1-(Settling Factor)/100)
Maximum Annual Fugitive Emissions (ton/yr)= (Hourly fugitive emissions (lb/hr)/ hourly Process rate (ton/hr) x (Annual process rate (tons/yr) x (ton/2000 lbs)
Total Emission Rate (lb/hr) = (Maximum Stack Emission Rate lb/hr) + (Maximum Fugitive Emission Rate lb/hr)
Total Emission Rates Annual (TPY)= (annual stack emissions (ton/yr)) + (annual fugitive emissions (ton/yr))

Form AI-S003(6) Supplement
Actual Estimated - CY2019
Emissions Calculations
East Jordan Foundry, LLC

Maximum Yearly Capacity
MMCF/Year

Flow Diagram Designation
Baghouse L

Maximum Hourly Capacity
MMCF/Hour

Process Description:
East Jordan Foundry, LLC
Baghouse L
Control Device: Baghouse L
SCC Code:
Control Device Outlet: 0.0000 gr/dscf
Airflow: 21,000 acfm
Stack Gas Temperature: 100 °F

Facility Process Name:	Criteria Pollutants								
Baghouse L									
Emission Factor Basis:	**PM**	**PM10**	**PM2.5**	**SOx**	**NOx**	**VOC**	**CO**	**Lead**	**CO_2e**
Emission Factors:									
(source)									
Capture Efficiency									
Control Efficiency									
Building Capt. Eff									
Maximum Stack Emission Rate:									
Hourly (lb/hr)	0.005	0.005	0.005						
Annual (TPY)	**0.012**	**0.012**	**0.012**						
Maximum Fugitive Emission Rate:									
Hourly (lb/hr)									
Annual (TPY)									
Total Emission Rate:									
Hourly (lb/hr)	0.005	0.005	0.005						
Annual (TPY)	**0.012**	**0.012**	**0.012**						

PROPOSED OPERATING SCHEDULE
24 HRS/DAY
4,580 HRS/YEAR

Note 1: This baghouse controls PUCB Coremaking and Shell Coremaking

EXAMPLE CALCULATIONS:
Maximum Stack Emission Rate (lb/hr) {PM,PM-10} =(gr/acfm) x (acfm) x (1 lb / 7000 grains) x (60 min / 1 hr)
Maximum Annual (Ton/yr) stack Emission Rates = (lb/hr emission rate) x (hours of operation per year at max. rate) x (ton/2000 lbs)
Maximum Fugitive Emission Rate (lb/hr) = ((1 - Capture Efficiency/100) x (Emission Factor) x (Melt ton/hr) x (1-(Settling Factor)/100)
Maximum Annual Fugitive Emissions (ton/yr)= (Hourly fugitive emissions (lb/hr)/ hourly Process rate (ton/hr) x (Annual process rate (tons/yr) x (ton/2000 lbs)
Total Emission Rate (lb/hr) = (Maximum Stack Emission Rate lb/hr) + (Maximum Fugitive Emission Rate lb/hr)
Total Emission Rates Annual (TPY)= (annual stack emissions (ton/yr)) + (annual fugitive emissions (ton/yr))

EGLE

RENEWABLE OPERATING PERMIT APPLICATION
AI-001: ADDITIONAL INFORMATION

This information is required by Article II, Chapter 1, Part 55 (Air Pollution Control) of P.A. 451 of 1994, as amended, and the Federal Clean Air Act of 1990. Failure to obtain a permit required by Part 55 may result in penalties and/or imprisonment. Please type or print clearly. Refer to instructions for additional information to complete this form.

	SRN: N6052	Section Number (if applicable):

1. Additional Information ID
AI-S-003(7)

Additional Information

2. Is This Information Confidential? ☐ Yes ☒ No

7. a. Are any emission units subject to Compliance Assurance Monitoring (CAM)? If Yes, Identify the specific emission unit(s) and pollutants subject to CAM on an AI-001 Form.
b, Is a CAM Plan included with this application on an AI-001 Form?

See the attached for specific emission units and required CAM Plans for particulates.

Compliance Assurance Monitoring Plan (S-ENV-4464_Rev. A)

Compliance Assurance Monitoring Plan
East Jordan Foundry, LLC
Elmira, Michigan

By
Mad River Strategies, Inc.

For
East Jordan Foundry, LLC
2675 N US 131
Elmira, Michigan

November 2019

Table of Contents

Revisions to CAM Plan 1
List of Acronyms 2
1.0 Introduction 3
2.0 CAM Applicability 4
3.0 CAM Plans 5

Revisions to CAM Plan

Date	Description
November 04, 2019, Rev. A	Initial issuance of plan.

List of Acronyms

CAM	Compliance assurance monitoring
CD	Control Device
CFR	Code of Federal Regulations
CMS	Continuous monitoring system
CO	Carbon Monoxide
DRE	Destruction efficiency
EJ Foundry	East Jordan Foundry
EU	Emission Unit
FR	Federal Register
HAP	Hazardous Air Pollutant
IA	Insignificant Activity
Inches w. g.	Inches of Water, Gauge Pressure
MACT	Maximum Achievable Control Technology
MPAP	Malfunction, Prevention and Abatement Plan
NSPS	New Source Performance Standards
PM	Particulate Matter
PPMVd	Parts per million, by volume, on a dry basis
PPMVw	Parts per million, by volume, on a wet basis
PS	Performance Specification
PSEU	Pollutant-specific emission unit
QA/QC	Quality Assurance/Quality Control
QIP	Quality Improvement Plan
SCFM	Standard cubic feet per minute
SV	Stack / Vent
TEA	Triethylamine
TSP	Total Suspended Particulate
USEPA	United States Environmental Protection Agency
VOC	Volatile Organic Compound

1.0 Introduction

East Jordan Foundry, LLC (EJF) located in Elmira, Michigan operates a gray iron foundry and is subject to the requirements identified in Air Permit to Install (PTI) 185-16A. Emission units identified within the PTI are described in the Tables.

EJF is a "major source" subject to the requirement to obtain a Part 70 permit. Per 40 CFR 64.2(a), a facility subject to Part 70 air permitting requirements is subject to Compliance Assurance Monitoring (CAM) requirements if certain criteria as will be discussed in Section 2.0 are met.

This Compliance Assurance Monitoring (CAM) Plan addresses the requirements of 40 CFR Part 64 and satisfies the CAM requirements for EJF.

2.0 CAM Applicability

Per 40 CFR 64.2(a), the CAM requirement applies to each pollutant-specific emission unit (PSEU) at a major source that is required to obtain a part 70 permit if the unit satisfies all of the following criteria [and is not exempted by the rule or have emissions limitations or standards not exempted by the rule]:

- The unit is subject to an emissions limitation or standard for the applicable regulated air pollutant;
- The unit uses a control device to achieve compliance with any such emission limitation or standard; and
- The unit has "potential pre-control device emissions" of the applicable regulated air pollutant that are equal to or greater than 100 percent of the amount, in tons per year, required for a source to be classified as a major source.

Potential Pre-Control Device Emissions

Of special importance to the above, is the definition of "potential pre-control device emissions." Per Part 64, this shall have the same meaning as "potential to emit" as defined in Title V regulations except the emission reduction achieved by the applicable control device shall not be taken into account.

Potential to emit is defined in Part 70, the Title V regulations, as "the maximum capacity of a stationary source to emit any air pollutant under its physical and operational design. Any physical or operational limitation on the capacity of a source to emit an air pollutant, including air pollution control equipment and restrictions on hours of operation or on the type or amount of material combusted, stored, or processed, shall be treated as part of its design if the limitation is enforceable by the Administrator."

Potential Pre-Control Device emissions are provided in Appendix B.

CAA Section 112 Exemption

Part 64 CAM exemptions are related to rules or emissions limitations and not to specific equipment. The exemptions are available based on monitoring requirements in those rules or emissions limitations being inherently sufficient to provide assurance of compliance without the additional burden of CAM requirements. A specific exemption is provided for those PSEUs that are subject to Clean Air Act Section 111 or 112 standards promulgated after 11/15/1990 since those standards have been and will be designed with monitoring that provides a reasonable assurance of compliance.

The EJF facility is subject to the National Emission Standards for Hazardous Air Pollutants (NESHAP) for Iron and Steel Foundries (40 CFR Part 63 Subpart ZZZZZ) which is also referred to as the Foundry Area Source Rule. The Foundry Area Source Rule was promulgated on January 2, 2008 and provides emission limits for metal hazardous air pollutants (HAP) or alternatively total particulate matter as a surrogate for total metal HAP for foundry melting operations. The Foundry Area Source Rule was a rule developed under CAA Section 112 following 11/15/1990 and any source regulated under that rule would be exempt from CAM.

Electric Induction Melting Furnaces operating under EGMELTING, consisting of EUEIF1, EUEIF2, EUEIF3, and EUEIF4, are exempted from the CAM requirements as these furnaces are subject to specific emission limits contained in the Foundry Area Source Rule since the standard have been designed with monitoring that provides a reasonable assurance of compliance. This exemption is somewhat of a moot point as shown by the calculations provided in Appendix B as the uncontrolled emissions from these furnaces are such that the potential pre-control emissions are less than 100 percent of the amount required for the furnaces to be classified as a major source.

Table 1 provided in Appendix A yields an emission unit by emission unit evaluation of CAM applicability. This evaluation is supported by the Potential Pre-Control Device Emissions quantified in Appendix B.

The results of the evaluation identified the following emission units as subject to CAM:

- EUDUCTINOC
- EULMLSO
- EU1230SO
- EUSHMM
- EUBLAST
- EUGRIND

3.0 CAM Plans

The CAM Plans for the emission units identified in Section 2.0 are provided in Tables 2 through 7 included in Appendix A.

Appendix A
Tables

CAM Applicability
East Jordan Foundry, LLC
Elmira, Michigan

TABLE 1

Emission Unit ID	Emission Unit Description (Process Equipment & Control Devices)	Flexible Group ID	Subject to an Emissions Limitation or Standard for the Applicable Regulated Air Pollutant (Y/N)?	Uses a Control Device to Achieve Compliance with any such Emission Limitation or Standard (Y/N)?	"Potential Pre-Control Device Emissions" of the Applicable Regulated Air Pollutant that are Equal to or Greater than 100 Percent of the Amount (in TPY), Required for a Source to be Classified as a Major Source (Y/N)?	CAM Applicable (Y/N)?
EUCHRGHAND	Charge Handling - The handling and storage of furnace charge material include internal returns (e.g. sprue, scrap), incoming scrap metal, alloy materials, inoculants, fluxes, etc.	FGFACILITY FGMACTZZZZZ	Y	Y	N	N
EUEIF1	Electric Induction Furnace Melting - Electric Induction Furnace (EIF) to melt and process charge material. Design holding capacity 11 tons	FGMELTING FGFACILITY FGMACTZZZZZ	Y	Y	N	N
EUEIF2	Electric Induction Furnace Melting - Electric Induction Furnace (EIF) to melt and process charge material. Design holding capacity 11 tons	FGMELTING FGFACILITY FGMACTZZZZZ	Y	Y	N	N
EUEIF3	Electric Induction Furnace Melting - Electric Induction Furnace (EIF) to melt and process charge material. Design holding capacity 11 tons	FGMELTING FGFACILITY FGMACTZZZZZ	Y	Y	N	N
EUEIF4	Electric Induction Furnace Melting - Electric Induction Furnace (EIF) to melt and process charge material. Design holding capacity 11 tons	FGMELTING FGFACILITY FGMACTZZZZZ	Y	Y	N	N
EUDUCTINOC	Ductile Inoculation - An addition of magnesium-based material to strengthen the metal when cast.	FGFACILITY FGMACTZZZZZ	Y	Y	Y	Y
EUMLTXFER	Hot Metal Transfer - The transfer of hot metal in a ladle (transfer ladle) from the electric induction furnaces to the pouring operations.	FGFACILITY FGMACTZZZZZ	Y	Y	N	N
EULMLPC	Large Mold Line Pouring and Cooling - The pouring and subsequent cooling of molten metal cast in a sand mold on the Large Mold Line. The mold and casting is subsequently transferred to the LML Shakeout.	FGPOURCOOL FGFACILITY FGMACTZZZZZ	Y	Y	N	N
EULMLSO	Large Mold Line Shakeout - The separation of mold and core sand from the casting. Sprue is subsequently transferred to Charge Handling, while mold and core sand is discharged to conveyors that are part of Sand Handling and Moldmaking.	FGSHAKEOUT FGFACILITY FGMACTZZZZZ	Y	Y	Y	Y
EU1230PC	1230 Line Pouring and Cooling -The pouring and subsequent cooling of molten metal cast in a sand mold on the 1230 Line. The mold and casting is subsequently transferred to 1230 Line Shakeout.	FGPOURCOOL FGFACILITY FGMACTZZZZZ	Y	Y	N	N
EU1230SO	1230 Line Shakeout - The separation of mold and core sand from the casting. Sprue is subsequently transferred to Charge Handling, while mold and core sand is discharged to conveyors that are part of Sand Handling and Moldmaking.	FGSHAKEOUT FGFACILITY FGMACTZZZZZ	Y	Y	Y	Y
EUSHMM	Sand Handling and Moldmaking - Includes Moldmaking and application of mold release.	FGFACILITY FGMACTZZZZZ	Y	Y	Y	Y
EUBLAST	Shotblasting - Enclosed process for the removal of excess sand and metal from casting surface.	FGFACILITY FGMACTZZZZZ	Y	Y	Y	Y
EUGRIND	Grinding - Remove of unwanted metal at the mold parting lines and elsewhere.	FGFACILITY FGMACTZZZZZ	Y	Y	Y	Y
EUDIPTANK	Asphaltic Dip Tank - The application of a low-VOC coating to finished castings.	FGFACILITY FGMACTZZZZZ	Y	N	N	N
EUPUNBCM	Phenolic Urethane No Bake (PUNB) Coremaking - After sand is heated to promote the reaction, a two-part resin system and a single liquid catalyst is mixed with the sand. After mixing the sand is distributed to the pattern. A release agent to promote core removal may be applied to the pattern prior to forming the core.	FGFACILITY FGMACTZZZZZ	Y	Y	N	N
EUSHELLCM	Shell Coremaking - Resin coated sand is fed to a pattern that is preheated and coated with a release agent. Heat from the pattern cures the sand mix into the desired shape.	FGFACILITY FGMACTZZZZZ	Y	Y	N	N
EUCOREWASH	Core Washing - The application of a VOC-containing refractory material (slurry) to the core. The core is subsequently ignited (i.e. lightoff) to dry and partially destroy the VOCs.	FGCORECHEM FGFACILITY FGMACTZZZZZ	Y	N	N	N
EUCORERELEASE	Core Release - The application on an "as needed basis" of a material to promote the release of the core from the pattern.	FGCORECHEM FGFACILITY FGMACTZZZZZ	Y	N	N	N
EULDLREPAIR	Ladle Repair - The removal and replacement of ladle refractory used to protect the ladle from the heat of the molten metal.	FGFACILITY FGMACTZZZZZ	Y	Y	N	N
EUWASTESAND	Waste Sand Dust Handling - The removal and disposition of spent sand from the system.	FGFACILITY FGMACTZZZZZ	Y	N	N	N

CAM Applicability
East Jordan Foundry, LLC
Elmira, Michigan

TABLE 1

Emission Unit ID	Emission Unit Description (Process Equipment & Control Devices)	Flexible Group ID	Subject to an Emissions Limitation or Standard for the Applicable Regulated Air Pollutant (Y/N)?	Uses a Control Device to Achieve Compliance with any such Emission Limitation or Standard (Y/N)?	"Potential Pre-Control Device Emissions" of the Applicable Regulated Air Pollutant that are Equal to or Greater than 100 Percent of the Amount (in TPY), Required for a Source to be Classified as a Major Source (Y/N)?	CAM Applicable (Y/N)?
EUMUAGEN	Makeup Air Units - Nine (9) natural-gas fired makeup air units with maximum rating of 10.4328 MMBtu/hr each. Two (2) natural gas fired makeup air units with maximum rating of 7.8246 MMBtu/hr each.	FGNATGASUNITS FGFACILITY FGMACTZZZZZ	Y	N	N	N
EUHTRFDRYOFF	Foundry Office Heaters - Four (4) natural-gas fired units to provide heat to foundry offices with a maximum total rating of 0.600 MMBtu/hr.	FGNATGASUNITS FGFACILITY FGMACTZZZZZ	Y	N	N	N
EUHTRSUPPOFF	Support Office Heaters - Natural-gas fired units to provide heat to shipping office, maintenance office, grinding office, melt lab, scale office, mold office, CMM, control room, sand lab and (2) local bathroom with a maximum total rating of 0.700 MMBtu/hr.	FGNATGASUNITS FGFACILITY FGMACTZZZZZ	Y	N	N	N
EUHTROILBLD	Oil Building Heater - Natural-gas fired unit to provide heat to oil storage building with a maximum total rating of 0.350 MMBtu/hr.	FGNATGASUNITS FGFACILITY FGMACTZZZZZ	Y	N	N	N
EUINFARED	Infrared heaters - Seven (7) infrared natural-gas heaters to provide heat to the building rated at 0.130 MMBtu/hr each.	FGNATGASUNITS FGFACILITY FGMACTZZZZZ	Y	N	N	N
EUBOILERS	Hot Water Boilers - Four (4) natural-gas hot water heaters total. Two (2) heaters rated at a maximum of 1.0 MMBtu/hr and two (2) heaters rated at a maximum of 0.096 MMBtu/hr. All to provide hot water to showers, restrooms, kitchen, etc.	FGNATGASUNITS FGFACILITY FGMACTZZZZZ	Y	N	N	N
EUFNCHEAT	Furnace Heaters - Four (4) natural-gas fired furnace heaters rated up to 2.0 MMBtu/hr to maintain environment when furnaces are not in use or as necessary.	FGNATGASUNITS FGFACILITY FGMACTZZZZZ	Y	N	N	N
EULDLHEAT	Ladle Preheaters - Three (3) natural-gas fired pedestal ladle heaters rated up to 1.5 MMBtu/hr each.	FGNATGASUNITS FGFACILITY FGMACTZZZZZ	Y	N	N	N
EULDLREPAIRHTR	Ladle Repair Torches - Eight (8) natural-gas fired ladle repair curing torches rated up to 2.0 MMBtu/hr each.	FGNATGASUNITS FGFACILITY FGMACTZZZZZ	Y	N	N	N
EUDUCTHTRS	Baghouse Duct Heaters - Five (5) natural-gas duct heaters for LML Mold Cooling, 1230 Mold Cooling, Sand Cooling, Hot Sand Screen, Cool Sand Screen rated at up to 0.50 MMBtu/hr each	FGNATGASUNITS FGFACILITY FGMACTZZZZZ	Y	N	N	N
EUDIPTANKHTR	Dip Tank Heater - One (1) natural-gas dip tank heater rated up to 0.140 MMBtu/hr to maintain coating at appropriate temperature.	FGNATGASUNITS FGFACILITY FGMACTZZZZZ	Y	N	N	N
EUDIPCUREOVEN	Dip Cure Oven - One (1) natural-gas dip curing oven heater rated up to 3.5 MMBtu/hr	FGNATGASUNITS FGFACILITY FGMACTZZZZZ	Y	N	N	N
EUPUNBBOILER	PUNB Core Sand Heater - One (1) natural-gas boiler to heat sand prior to mixing rated at 0.15 MMBtu/hr	FGNATGASUNITS FGFACILITY FGMACTZZZZZ	Y	N	N	N
EUSCALEPITBOILER	Scale Pit Boiler - One (1) natural-gas boiler to supply heat for scale pit rated at 0.096 MMBtu/hr.	FGNATGASUNITS FGFACILITY FGMACTZZZZZ	Y	N	N	N
EUSHELLHEATERS	Shell Core Heaters - Four (4) natural-gas heaters to heat shell core boxes. Two (2) rated at 1.0 MMBtu/hr and two (2) rated at 0.50 MMBtu/hr.	FGNATGASUNITS FGFACILITY FGMACTZZZZZ	Y	N	N	N
EUEG1	300 KW Natural Gas-Fired Emergency Generator - The emergency generator will be used to supply emergency power sufficient to remove any metal left in the furnaces should a power outage occur.	FGEG FGFACILITY	Y	N	N	N
EUEG2	300 KW Natural Gas-Fired Emergency Generator - The emergency generator will be used to supply emergency power sufficient to remove any metal left in the furnaces should a power outage occur.	FGEG FGFACILITY	Y	N	N	N
EUROADS	Roadways and Parking Areas - Paved roads and parking areas used for receipt and shipping of goods as well as employee and visitor parking.	FGFACILITY	N	N	N	N

TABLE 2:DUCTILE INOCULATION			
I	**Background**		
	A.	Emissions Unit Information:	
		Description	The addition of magnesium-based material to strengthen the metal when cast.
		Identification	EUDUCTINOC
	B.	Applicable Regulation, Emission Limit, and Monitoring Requirements:	
		Regulation Numbers	R 336.1331(1)(c) – Condition of a PTI R 336.2803 – Ambient Air Increments R 336.2804 – Ambient Air Ceilings R 336.2810 – Control Technology Review
		Emissions Limits	
		Particulates	Baghouse A and B shall not exceed 0.002 gr/dscf and 2.726 pph
		Monitoring Requirements	Continuously measure and record daily differential pressure measured in inches of water across the baghouse filtration media.
	C.	Control Technology:	
		Baghouses A and B (Fabric Filters)	
II	**Monitoring Approach**		
	The key elements of the monitoring approach are presented below:		
	A.	Indicator:	Differential pressure will be used as the indicator.
	B.	Measurement Approach:	Differential pressure across the baghouse filtration media will be continuously monitored.
	C.	Indicator Range:	The differential pressure will be maintained in the differential pressure range identified in the facility's PMP.
	D.	QIP Threshold:	None identified.

III	**Performance Criteria**		
	A.	Data Representativeness:	Measurements are being made directly at the control device across the filtration media.
	B.	Verification of Operational Status:	Differential pressure will be monitored continuously and recorded once per shift during operation to verify operational status.
	C.	QA/QC Practices and Criteria:	The pressure instrumentation will be maintained based on the plant's standard procedures, which have been established in part from the manufacturer's recommendations.
	D.	Monitoring Frequency and Data Collection Procedure:	Differential pressure will be monitored continuously.
	E.	Data Collection Procedure:	Differential pressure will be recorded once per shift, as identified in the PMP.
	F.	Averaging Period:	None identified.
IV	**Justification**		
	A.	Background:	
		EJF utilizes a baghouse to control the emission of particulate matter from the identified operations.	
	B.	Rationale for Selection of Performance Indicator:	
		Differential pressure was selected as the performance indicator because it indicates that the baghouse is operating properly. Monitoring pressure drop provides a means of detecting a change in operation that can lead to an increase in emissions. An increase in pressure drop can indicate that the cleaning cycle is not frequent enough, cleaning equipment is damaged, the bags are becoming inefficient, or the airflow has increased. A decrease in pressure drop may indicate broken or loose bags. Pressure drop across the baghouse also serves to indicate that there is airflow through the control device.	
	C.	Rationale for Selection of Performance Indicator Level:	
		Particulate emissions from the baghouse exhaust vary within a normal range dependent on process variables. So long as the differential pressure remains within this normal range, the baghouse is performing as expected. If the differential pressure is out of the allowable operating range, then baghouse performance is abnormal and corrective action will be initiated to return the baghouse performance to normal, as described in the PMP for the facility.	
	D.	Performance Test:	
		A performance test was performed on the baghouse in 2019. This testing was performed under conditions of maximum emissions potential under anticipated operating conditions. The performance test has been submitted to EGLE.	

TABLE 3: LARGE MOLD LINE SHAKEOUT			
I	**Background**		
	A.	Emissions Unit Information:	
		Description	The separation of mold and core sand from the casting. Sprue is subsequently transferred to Charge Handling, while mold and core sand is discharged to conveyors that are part of Sand Handling and Moldmaking.
		Identification	EULMLSO
	B.	Applicable Regulation, Emission Limit, and Monitoring Requirements:	
		Regulation Numbers	R 336.1331(1)(c) – Condition of a PTI R 336.2803 – Ambient Air Increments R 336.2804 – Ambient Air Ceilings R 336.2810 – Control Technology Review
		Emissions Limits	
		Particulates	Baghouse C, D and E shall not exceed 0.0015 gr/dscf and 1.278 pph, 0.002 gr/dscf and 1.363 pph, and 0.002 gr/dscf and 1.038 pph, respectively.
		Monitoring Requirements	Continuously measure and record daily differential pressure measured in inches of water across the baghouse filtration media.
	C.	Control Technology:	
		Baghouses C, D and E (Fabric Filters)	
II	**Monitoring Approach**		
	The key elements of the monitoring approach are presented below:		
	A.	Indicator:	Differential pressure will be used as the indicator.
	B.	Measurement Approach:	Differential pressure across the baghouse filtration media will be continuously monitored.
	C.	Indicator Range:	The differential pressure will be maintained in the differential pressure range identified in the facility's PMP.
	D.	QIP Threshold:	None identified.

III	**Performance Criteria**		
	A.	Data Representativeness:	Measurements are being made directly at the control device across the filtration media.
	B.	Verification of Operational Status:	Differential pressure will be monitored continuously and recorded once per shift during operation to verify operational status.
	C.	QA/QC Practices and Criteria:	The pressure instrumentation will be maintained based on the plant's standard procedures, which have been established in part from the manufacturer's recommendations.
	D.	Monitoring Frequency and Data Collection Procedure:	Differential pressure will be monitored continuously.
	E.	Data Collection Procedure:	Differential pressure will be recorded once per shift, as identified in the PMP.
	F.	Averaging Period:	None identified.
IV	**Justification**		
	A.	Background:	
		EJF utilizes a baghouse to control the emission of particulate matter from the identified operations.	
	B.	Rationale for Selection of Performance Indicator:	
		Differential pressure was selected as the performance indicator because it indicates that the baghouse is operating properly. Monitoring pressure drop provides a means of detecting a change in operation that can lead to an increase in emissions. An increase in pressure drop can indicate that the cleaning cycle is not frequent enough, cleaning equipment is damaged, the bags are becoming inefficient, or the airflow has increased. A decrease in pressure drop may indicate broken or loose bags. Pressure drop across the baghouse also serves to indicate that there is airflow through the control device.	
	C.	Rationale for Selection of Performance Indicator Level:	
		Particulate emissions from the baghouse exhaust vary within a normal range dependent on process variables. So long as the differential pressure remains within this normal range, the baghouse is performing as expected. If the differential pressure is out of the allowable operating range, then baghouse performance is abnormal and corrective action will be initiated to return the baghouse performance to normal, as described in the PMP for the facility.	
	D.	Performance Test:	
		A performance test was performed on the baghouse in 2019. This testing was performed under conditions of maximum emissions potential under anticipated operating conditions. The performance test has been submitted to EGLE.	

TABLE 4: 1230 LINE SHAKEOUT			
I	**Background**		
	A.	Emissions Unit Information:	
		Description	The separation of mold and core sand from the casting. Sprue is subsequently transferred to Charge Handling, while mold and core sand is discharged to conveyors that are part of Sand Handling and Moldmaking.
		Identification	EU1230SO
	B.	Applicable Regulation, Emission Limit, and Monitoring Requirements:	
		Regulation Numbers	R 336.1331(1)(c) – Condition of a PTI R 336.2803 – Ambient Air Increments R 336.2804 – Ambient Air Ceilings R 336.2810 – Control Technology Review
		Emissions Limits	
		Particulates	Baghouse C, D and E shall not exceed 0.0015 gr/dscf and 1.278 pph, 0.002 gr/dscf and 1.363 pph, and 0.002 gr/dscf and 1.038 pph, respectively.
		Monitoring Requirements	Continuously measure and record daily differential pressure measured in inches of water across the baghouse filtration media.
	C.	Control Technology:	
		Baghouses C, D and E (Fabric Filters)	
II	**Monitoring Approach**		
	The key elements of the monitoring approach are presented below:		
	A.	Indicator:	Differential pressure will be used as the indicator.
	B.	Measurement Approach:	Differential pressure across the baghouse filtration media will be continuously monitored.
	C.	Indicator Range:	The differential pressure will be maintained in the differential pressure range identified in the facility's PMP.
	D.	QIP Threshold:	None identified.

III	**Performance Criteria**		
	A.	Data Representativeness:	Measurements are being made directly at the control device across the filtration media.
	B.	Verification of Operational Status:	Differential pressure will be monitored continuously and recorded once per shift during operation to verify operational status.
	C.	QA/QC Practices and Criteria:	The pressure instrumentation will be maintained based on the plant's standard procedures, which have been established in part from the manufacturer's recommendations.
	D.	Monitoring Frequency and Data Collection Procedure:	Differential pressure will be monitored continuously.
	E.	Data Collection Procedure:	Differential pressure will be recorded once per shift, as identified in the PMP.
	F.	Averaging Period:	None identified.
IV	**Justification**		
	A.	Background:	
		EJF utilizes a baghouse to control the emission of particulate matter from the identified operations.	
	B.	Rationale for Selection of Performance Indicator:	
		Differential pressure was selected as the performance indicator because it indicates that the baghouse is operating properly. Monitoring pressure drop provides a means of detecting a change in operation that can lead to an increase in emissions. An increase in pressure drop can indicate that the cleaning cycle is not frequent enough, cleaning equipment is damaged, the bags are becoming inefficient, or the airflow has increased. A decrease in pressure drop may indicate broken or loose bags. Pressure drop across the baghouse also serves to indicate that there is airflow through the control device.	
	C.	Rationale for Selection of Performance Indicator Level:	
		Particulate emissions from the baghouse exhaust vary within a normal range dependent on process variables. So long as the differential pressure remains within this normal range, the baghouse is performing as expected. If the differential pressure is out of the allowable operating range, then baghouse performance is abnormal and corrective action will be initiated to return the baghouse performance to normal, as described in the PMP for the facility.	
	D.	Performance Test:	
		A performance test was performed on the baghouse in 2019. This testing was performed under conditions of maximum emissions potential under anticipated operating conditions. The performance test has been submitted to EGLE.	

TABLE 5: SAND HANDLING AND MOLDMAKING			
I	**Background**		
	A.	Emissions Unit Information:	
		Description	Belts, elevators, bins, screen(s), and muller. Unit also Includes Moldmaking and application of mold release.
		Identification	EUSHMM
	B.	Applicable Regulation, Emission Limit, and Monitoring Requirements:	
		Regulation Numbers	R 336.1331(1)(c) – Condition of a PTI R 336.2803 – Ambient Air Increments R 336.2804 – Ambient Air Ceilings R 336.2810 – Control Technology Review
		Emissions Limits	
		Particulates	Baghouse A, B, E, F and G shall not exceed 0.002 gr/dscf and 2.726 pph, 0.002 gr/dscf and 2.726 pph, 0.002 gr/dscf and 1.038 pph, 0.002 gr/dscf and 1.038 pph, and 0.002 gr/dscf and 0.681 pph, respectively
		Monitoring Requirements	Continuously measure and record daily differential pressure measured in inches of water across the baghouse filtration media.
	C.	Control Technology:	
		Baghouses A, B, E, F and G (Fabric Filters)	
II	**Monitoring Approach**		
	The key elements of the monitoring approach are presented below:		
	A.	Indicator:	Differential pressure will be used as the indicator.
	B.	Measurement Approach:	Differential pressure across the baghouse filtration media will be continuously monitored.
	C.	Indicator Range:	The differential pressure will be maintained in the differential pressure range identified in the facility's PMP.
	D.	QIP Threshold:	None identified.

III	**Performance Criteria**		
	A.	Data Representativeness:	Measurements are being made directly at the control device across the filtration media.
	B.	Verification of Operational Status:	Differential pressure will be monitored continuously and recorded once per shift during operation to verify operational status.
	C.	QA/QC Practices and Criteria:	The pressure instrumentation will be maintained based on the plant's standard procedures, which have been established in part from the manufacturer's recommendations.
	D.	Monitoring Frequency and Data Collection Procedure:	Differential pressure will be monitored continuously.
	E.	Data Collection Procedure:	Differential pressure will be recorded once per shift, as identified in the PMP.
	F.	Averaging Period:	None identified.
IV	**Justification**		
	A.	Background:	
		EJF utilizes a baghouse to control the emission of particulate matter from the identified operations.	
	B.	Rationale for Selection of Performance Indicator:	
		Differential pressure was selected as the performance indicator because it indicates that the baghouse is operating properly. Monitoring pressure drop provides a means of detecting a change in operation that can lead to an increase in emissions. An increase in pressure drop can indicate that the cleaning cycle is not frequent enough, cleaning equipment is damaged, the bags are becoming inefficient, or the airflow has increased. A decrease in pressure drop may indicate broken or loose bags. Pressure drop across the baghouse also serves to indicate that there is airflow through the control device.	
	C.	Rationale for Selection of Performance Indicator Level:	
		Particulate emissions from the baghouse exhaust vary within a normal range dependent on process variables. So long as the differential pressure remains within this normal range, the baghouse is performing as expected. If the differential pressure is out of the allowable operating range, then baghouse performance is abnormal and corrective action will be initiated to return the baghouse performance to normal, as described in the PMP for the facility.	
	D.	Performance Test:	
		A performance test was performed on the baghouse in 2019. This testing was performed under conditions of maximum emissions potential under anticipated operating conditions. The performance test has been submitted to EGLE.	

TABLE 6: SHOTBLASTING			
I	**Background**		
	A.	Emissions Unit Information:	
		Description	Enclosed process for the removal of excess sand and metal from casting surface.
		Identification	EUBLAST
	B.	Applicable Regulation, Emission Limit, and Monitoring Requirements:	
		Regulation Numbers	R 336.1331(1)(c) – Condition of a PTI R 336.2803 – Ambient Air Increments R 336.2804 – Ambient Air Ceilings R 336.2810 – Control Technology Review
		Emissions Limits	
		Particulates	Baghouse H and J shall not exceed 0.001 gr/dscf and 1.704 pph.
		Monitoring Requirements	Continuously measure and record daily differential pressure measured in inches of water across the baghouse filtration media.
	C.	Control Technology:	
		Baghouses H and J (Fabric Filters)	
II	**Monitoring Approach**		
	The key elements of the monitoring approach are presented below:		
	A.	Indicator:	Differential pressure will be used as the indicator.
	B.	Measurement Approach:	Differential pressure across the baghouse filtration media will be continuously monitored.
	C.	Indicator Range:	The differential pressure will be maintained in the differential pressure range identified in the facility's PMP.
	D.	QIP Threshold:	None identified.

III	**Performance Criteria**		
	A.	Data Representativeness:	Measurements are being made directly at the control device across the filtration media.
	B.	Verification of Operational Status:	Differential pressure will be monitored continuously and recorded once per shift during operation to verify operational status.
	C.	QA/QC Practices and Criteria:	The pressure instrumentation will be maintained based on the plant's standard procedures, which have been established in part from the manufacturer's recommendations.
	D.	Monitoring Frequency and Data Collection Procedure:	Differential pressure will be monitored continuously.
	E.	Data Collection Procedure:	Differential pressure will be recorded once per shift, as identified in the PMP.
	F.	Averaging Period:	None identified.
IV	**Justification**		
	A.	Background:	
		EJF utilizes a baghouse to control the emission of particulate matter from the identified operations.	
	B.	Rationale for Selection of Performance Indicator:	
		Differential pressure was selected as the performance indicator because it indicates that the baghouse is operating properly. Monitoring pressure drop provides a means of detecting a change in operation that can lead to an increase in emissions. An increase in pressure drop can indicate that the cleaning cycle is not frequent enough, cleaning equipment is damaged, the bags are becoming inefficient, or the airflow has increased. A decrease in pressure drop may indicate broken or loose bags. Pressure drop across the baghouse also serves to indicate that there is airflow through the control device.	
	C.	Rationale for Selection of Performance Indicator Level:	
		Particulate emissions from the baghouse exhaust vary within a normal range dependent on process variables. So long as the differential pressure remains within this normal range, the baghouse is performing as expected. If the differential pressure is out of the allowable operating range, then baghouse performance is abnormal and corrective action will be initiated to return the baghouse performance to normal, as described in the PMP for the facility.	
	D.	Performance Test:	
		A performance test was performed on the baghouse in 2019. This testing was performed under conditions of maximum emissions potential under anticipated operating conditions. The performance test has been submitted to EGLE.	

TABLE 7: GRINDING			
I	**Background**		
	A.	Emissions Unit Information:	
		Description	Remove of unwanted metal at the mold parting lines and elsewhere.
		Identification	EUGRIND
	B.	Applicable Regulation, Emission Limit, and Monitoring Requirements:	
		Regulation Numbers	R 336.1331(1)(c) – Condition of a PTI R 336.2803 – Ambient Air Increments R 336.2804 – Ambient Air Ceilings R 336.2810 – Control Technology Review
		Emissions Limits	
		Particulates	Baghouse H and J shall not exceed 0.001 gr/dscf and 1.704 pph.
		Monitoring Requirements	Continuously measure and record daily differential pressure measured in inches of water across the baghouse filtration media.
	C.	Control Technology:	
		Baghouses H and J (Fabric Filters)	
II	**Monitoring Approach**		
	The key elements of the monitoring approach are presented below:		
	A.	Indicator:	Differential pressure will be used as the indicator.
	B.	Measurement Approach:	Differential pressure across the baghouse filtration media will be continuously monitored.
	C.	Indicator Range:	The differential pressure will be maintained in the differential pressure range identified in the facility's PMP.
	D.	QIP Threshold:	None identified.

III	**Performance Criteria**		
	A.	Data Representativeness:	Measurements are being made directly at the control device across the filtration media.
	B.	Verification of Operational Status:	Differential pressure will be monitored continuously and recorded once per shift during operation to verify operational status.
	C.	QA/QC Practices and Criteria:	The pressure instrumentation will be maintained based on the plant's standard procedures, which have been established in part from the manufacturer's recommendations.
	D.	Monitoring Frequency and Data Collection Procedure:	Differential pressure will be monitored continuously.
	E.	Data Collection Procedure:	Differential pressure will be recorded once per shift, as identified in the PMP.
	F.	Averaging Period:	None identified.
IV	**Justification**		
	A.	Background:	
		EJF utilizes a baghouse to control the emission of particulate matter from the identified operations.	
	B.	Rationale for Selection of Performance Indicator:	
		Differential pressure was selected as the performance indicator because it indicates that the baghouse is operating properly. Monitoring pressure drop provides a means of detecting a change in operation that can lead to an increase in emissions. An increase in pressure drop can indicate that the cleaning cycle is not frequent enough, cleaning equipment is damaged, the bags are becoming inefficient, or the airflow has increased. A decrease in pressure drop may indicate broken or loose bags. Pressure drop across the baghouse also serves to indicate that there is airflow through the control device.	
	C.	Rationale for Selection of Performance Indicator Level:	
		Particulate emissions from the baghouse exhaust vary within a normal range dependent on process variables. So long as the differential pressure remains within this normal range, the baghouse is performing as expected. If the differential pressure is out of the allowable operating range, then baghouse performance is abnormal and corrective action will be initiated to return the baghouse performance to normal, as described in the PMP for the facility.	
	D.	Performance Test:	
		A performance test was performed on the baghouse in 2019. This testing was performed under conditions of maximum emissions potential under anticipated operating conditions. The performance test has been submitted to EGLE.	

Appendix B
Potential Pre-Control Device Emissions Calculations

Uncontrolled Emission Calculations
CAM Applicability
East Jordan Foundry, LLC
Elmira, Michigan

Maximum Yearly Capacity
128,000 Tons/Year

Flow Diagram Designation
Charge Handling

Maximum Hourly Capacity
28.00 Tons/Hour

Process Description:

East Jordan Foundry, LLC
Charge Handling
Control Device: Baghouses A/B, E, H/J, K
SCC Code:
Control Device Outlet: gr/dscf
Airflow: acfm
Stack Gas Temperature: °F

The sprue return conveyors (1530) and alloy delivery system are included in the charge handling system.

Facility Process Name:	**Criteria Pollutants**								
Charge Handling									
Emission Factor Basis:	**PM**	**PM10**	**PM2.5**	**SOx**	**NOx**	**VOC**	**CO**	**Lead**	**CO_2e**
Emission Factors:	0.07	0.07	0.06						
(source)	Note 1	Note 1	Note 3						
Capture Efficiencies:									
Maximum Stack Emission Rate:									
Hourly (lb/hr)									
Annual (TPY)									
Maximum Fugitive Emission Rate:									
Hourly (lb/hr)	1.960	1.960	1.680						
Annual (TPY)	**4.480**	**4.480**	**3.840**						
Total Emission Rate:									
Hourly (lb/hr)	1.960	1.960	1.680						
Annual (TPY)	**4.480**	**4.480**	**3.840**						

PROPOSED OPERATING SCHEDULE
24 HRS/DAY
6,000 HRS/YEAR

Note 1: Gutow Article, Modern Casting; January 1972; PM emissions from Raw material handling (0.04 lbs/ton) and charge makeup (0.03 lbs/ton) released to the atmosphere. All PM emission were conservatively assumed to be PM-10 emissions.
Note 2: The Gutow article was supplement with an Ohio EPA RACM document to account for the ventilation at the sprue conveyor and inoculant addition system. Ohio EPA RACM guide indicates that the emissions generated from incoming scrap are of particle size 30 -1000 microns. Therefore the only source of emissions of PM/PM10 from raw material handling is from handling of foundry returns. Sprue return ventilation system would capture 80% of the emissions generated from foundry returns.
Note 3: Emission factor based on USEPA PM Calculator (March 2012) PM to PM2.5 ratio and uncontrolled PM emission factor.

EXAMPLE CALCULATIONS:
Maximum Emission Rate (lb/hr) {building exhausts} = (Emission Factor lb/ton) x (Maximum Hourly Rate tph) x (% returns/100 for PM10 only) x (1- %fugitive rate/100)
Maximum Emission Rate (lb/hr) {fugitive} = (Emission Factor lb/ton) x (Maximum Hourly Rate tph) x (%returns for PM10 only) x (% fugitive emissions rate/100)
Annual (TPY) Emission Rates = (lb/hr emission rate) x (Maximum Annual Melt Rate) / (Maximum Hourly Melt Rate) / (2000 lbs/ton)

Uncontrolled Emission Calculations
CAM Applicability
East Jordan Foundry, LLC
Elmira, Michigan

Maximum Yearly Capacity
128,000 Tons/Year

Flow Diagram Designation
EIF Melting

Maximum Hourly Capacity
28.00 Tons/Hour

Process Description:
East Jordan Foundry, LLC
EIF Melting
Control Device: Baghouses A/B
SCC Code:
Control Device Outlet: 0.0020 gr/dscf
Airflow: 57,000 acfm
Stack Gas Temperature: °F

Facility Process Name:		Criteria Pollutants								
EIF Melting										
Emission Factor Basis:		PM	PM10	PM2.5	SOx	NOx	VOC	CO	Lead	CO_2e
Emission Factors:	lb/ton	0.90	0.86	0.85			0.03	0.33		24.32
(source)		Note 1	Note 1	Note 6			Note 2	Note 4	Note 3	Note 5
Capture Efficiency										
Control Efficiency										
Building Capt. Eff										
Maximum Stack Emission Rate:										
Hourly (lb/hr)										
Annual (TPY)										
Maximum Fugitive Emission Rate:										
Hourly (lb/hr)		25.200	24.080	23.688			0.840	9.240		680.877
Annual (TPY)		57.600	55.040	54.144			1.920	21.120		1556.291
Total Emission Rate:										
Hourly (lb/hr)		25.200	24.080	23.688			0.840	9.240		680.877
Annual (TPY)		57.600	55.040	54.144			1.920	21.120		1556.291

PROPOSED OPERATING SCHEDULE
24 HRS/DAY
6,000 HRS/YEAR

Note 1: Emission factor from FIRE 6.25 SCC 3-04-003-03
Note 2: From Stack testing at Wheland Foundry in Tennessee
Note 3: See below HAPs calculations
Note 4: EJIW Foundry Stack Testing (Oct 2010). Results used with Wheland and Technikon information to distribute between melting, pouring, cooling and shakeout
Note 5: EJIW Stack Testing (July 2010). Average rate calculated between MS-01 & MS-02. Methane and Nitrous Oxide emissions are not known. Background concentration of CO2 was not considered
Note 6: Emission factor based on USEPA PM Calculator (March 2012) PM to PM2.5 ratio and uncontrolled PM emission factor

EXAMPLE CALCULATIONS:
Maximum Stack Emission Rate (lb/hr) {PM & PM-10}=(gr/acfm) x (acfm) x (1 lb / 7000 grains) x (60 min / 1 hr)
Maximum Stack Emission Rate (lb/hr) {Lead}=(gr/acfm) x (acfm) x (1 lb / 7000 grains) x (60 min / 1 hr)*(Lead EF/PM EF)
Maximum Annual (Tor/yr) Stack Emission Rates = (lb/hr emission rate) x (hours of operation per year at max. rate) x (ton/2000 lbs)
Maximum Fugitive Emission Rate (lb/hr) = ((1 - Capture Efficiency/100) x (Emission Factor) x (Melt ton/hr) x (1-(Settling Factor)/100)
Maximum Annual Fugitive Emissions (ton/yr)= (Hourly fugitive emissions (lb/hr)/ hourly Process rate (ton/hr) x (Annual process rate (tons/yr) x (ton/2000 lbs)
Total Emission Rate (lb/hr) = (Maximum Stack Emission Rate lb/hr) + (Maximum Fugitive Emission Rate lb/hr)
Total Emission Rates Annual (TPY)= (annual stack emissions (ton/yr)) + (annual fugitive emissions (ton/yr))

East Jordan Foundry, LLC
HAP Emission Calculations
EIF Melting

HAPs	CAS #	Note 10 Emission Factor %wt PM	Emissions lbs/hr	Emissions tons/yr	
Antimony (Sb)	7440-36-0				
Arsenic (As)	7440-38-2				
Beryllium (Be)	7440-41-7				
Cadmium (Cd)	7440-43-9				
Chromium (Cr)	7440-47-3	0.30	0.0781	0.1804	Note 8
Cobalt (Co)	7440-48-4				
Lead (Pb)	7439-92-1	0.13	0.0339	0.0782	Note 9
Manganese (Mn)	7439-96-5	0.70	0.1823	0.4210	Note 8
Mercury (Hg)	7439-97-6				
Nickel (Ni)	7440-02-0	0.10	0.0260	0.0601	Note 8
Selenium (Se)	7782-49-2				
Acetaldehyde	75-07-0				
Dimethylnaphthalenes	28804-88-8				
Cresol	1319-77-3				
Methylnaphthalenes	90-12-0				
Propionaldehyde	123-38-6				
Methylene diphenyl diisocyanate (MDI)	101-68-8				
4,4-methylenedianiline (MBA)	101-77-9				
Formaldehyde	50-00-0				
Cumene	98-82-8				
Benzene	71-43-2				
O-Xylene	95-47-6				
M-Xylene	108-38-3				
Phenol	108-95-2				
Naphthalene	91-20-3				
Ethyl Benzene	100-41-4				
Hydrogen Flouride	7664-39-3				
Toluene	108-88-3				
P-Xylene	106-42-3				
Hexane	110-54-3				
Xylenes	1330-20-7				
o-Cresol	95-48-7				
Styrene	100-42-5				
Acetophenone	98-86-2				
Dibenzofurans	132-64-9				
Nitrobenzene	98-95-3				
Total HAPs			3.20E-01	7.40E-01	

Note 8: Emission factors are taken from design range of Gray & Ductile Iron. Emissions were estimated using the highest end of the concentration range of either metal type.
Note 9: Emission factor developed using the average compositional lead content of baghouse dust
Note 10: %wt of PM EF multiplied fugitive and stack emissions. Stack emissions derived from air volume allocated to EIFs and gr loading of BH

Uncontrolled Emission Calculations
CAM Applicability
East Jordan Foundry, LLC
Elmira, Michigan

Maximum Yearly Capacity
128,000 Tons/Year

Flow Diagram Designation
Ductile Inoculation

Maximum Hourly Capacity
28.00 Tons/Hour

Process Description:
East Jordan Foundry, LLC
Ductile Inoculation
Control Device: Baghouses A/B
SCC Code:
Control Device Outlet: gr/dscf
Airflow: acfm
Stack Gas Temperature: °F

Facility Process Name:			**Criteria Pollutants**								
	Ductile Inoculation										
Emission Factor Basis:			**PM**	**PM10**	**PM2.5**	**SOx**	**NOx**	**VOC**	**CO**	**Lead**	**CO_2e**
Emission Factors:		lb/ton	3.00	3.00	1.89			0.005			
(source)			Note 2	Note 2	Note 3			Note 1			
		Capture Efficiency									
	Note 4	Process Design Reduction Eff.									
		Building Capt. Eff									
Maximum Stack Emission Rate:											
	Hourly (lb/hr)										
	Annual (TPY)										
Maximum Fugitive Emission Rate:											
	Hourly (lb/hr)		84.000	84.000	52.920			0.140			
	Annual (TPY)		**192.000**	**192.000**	**120.960**			**0.320**			
Total Emission Rate:											
	Hourly (lb/hr)		84.000	84.000	52.920			0.140			
	Annual (TPY)		**192.000**	**192.000**	**120.960**			**0.320**			

PROPOSED OPERATING SCHEDULE
24 HRS/DAY
6,000 HRS/YEAR

Note 1: Emission factor from FIRE 6.25 SCC 3-04-003-10
Note 2: Emission factor from FIRE 6.25 SCC 3-04-003-22
Note 3: Emission factor based on USEPA PM Calculator (March 2012) PM to PM2.5 ratio and uncontrolled PM emission factor.
Note 4: The inoculation ladle and method of inoculation "Tundish Ladle" that has been chosen is designed to minimize emissions to the atmosphere from this process. The manufacturer advertises a reduction in emissions of 98%.

EXAMPLE CALCULATIONS:
Maximum Fugitive Emission Rate (lb/hr) = (Emission Factor) x (process weight rate (ton/hr)) x (1-(Settling Factor)/100)
Annual (TPY) Emission Rates = (lb/hr emission rate) x (1/ Maximum Hourly Process Rate (tons/hr)) x (Annual process weight rate (tons/yr))x (ton/2000)

Uncontrolled Emission Calculations
CAM Applicability
East Jordan Foundry, LLC
Elmira, Michigan

Maximum Yearly Capacity
128,000 Tons/Year

Flow Diagram Designation
Hot Metal Transfer

Maximum Hourly Capacity
28.00 Tons/Hour

Process Description:
East Jordan Foundry, LLC
Hot Metal Transfer
Control Device: Baghouses A/B
SCC Code:
Control Device Outlet: gr/dscf
Airflow: acfm
Stack Gas Temperature: °F

Facility Process Name:	Criteria Pollutants								
Hot Metal Transfer									
Emission Factor Basis:	**PM**	**PM10**	**PM2.5**	**SOx**	**NOx**	**VOC**	**CO**	**Lead**	**CO_2e**
Emission Factors:	0.056	0.052	0.046						
(source)	Note 1	Note 2	Note 3						
Capture Efficiency									
Control Efficiency									
Building Capt. Eff									
Maximum Stack Emission Rate:									
Hourly (lb/hr)									
Annual (TPY)									
Maximum Fugitive Emission Rate:									
Hourly (lb/hr)	1.568	1.443	1.286						
Annual (TPY)	**3.584**	**3.297**	**2.939**						
Total Emission Rate:									
Hourly (lb/hr)	1.568	1.443	1.286						
Annual (TPY)	**3.584**	**3.297**	**2.939**						

PROPOSED OPERATING SCHEDULE
24 HRS/DAY
6,000 HRS/YEAR

Note 1: Hot metal transfer at building monitor. AP-42, Ch. 12-5, Table 12.5-1
Note 2: Emission factor based on USEPA PM Calculator PM/PM10/PM2.5 ratio and uncontrolled PM emission factor for SCC 30400320

EXAMPLE CALCULATIONS:
Maximum Stack Emission Rate (lb/hr) {PM,PM-10} =(gr/acfm) x (acfm) x (1 lb / 7000 grains) x (60 min / 1 hr)
Maximum Annual (Ton/yr) stack Emission Rates = (lb/hr emission rate) x (hours of operation per year at max. rate) x (ton/2000 lbs)
Maximum Fugitive Emission Rate (lb/hr) = ((1 - Capture Efficiency/100) x (Emission Factor) x (Melt ton/hr) x (1-(Settling Factor)/100)
Maximum Annual Fugitive Emissions (ton/yr)= (Hourly fugitive emissions (lb/hr)/ hourly Process rate (ton/hr) x (Annual process rate (tons/yr) x (ton/2000 lbs)
Total Emission Rate (lb/hr) = (Maximum Stack Emission Rate lb/hr) + (Maximum Fugitive Emission Rate lb/hr)
Total Emission Rates Annual (TPY)= (annual stack emissions (ton/yr)) + (annual fugitive emissions (ton/yr))

Uncontrolled Emission Calculations
CAM Applicability
East Jordan Foundry, LLC
Elmira, Michigan

Maximum Yearly Capacity
200 Tons/Year

Flow Diagram Designation
Ladle Repair

Maximum Hourly Capacity
1.00 Tons/Hour

Process Description:
East Jordan Foundry, LLC
Ladle Repair
Control Device: Baghouse K
SCC Code:
Control Device Outlet: gr/dscf
Airflow: acfm
Stack Gas Temperature: °F

Facility Process Name:		**Criteria Pollutants**								
Ladle Repair										
Emission Factor Basis:	**PM**	**PM10**	**PM2.5**	**SOx**	**NOx**	**VOC**	**CO**	**Lead**	**CO_2e**
Emission Factors: lb/ton	1.00	1.00	1.00						
(source)	Note 1	Note 2	Note 3						
Capture Efficiency									
Control Efficiency									
Building Capt. Eff									
Maximum Stack Emission Rate:									
Hourly (lb/hr)									
Annual (TPY)									
Maximum Fugitive Emission Rate:									
Hourly (lb/hr)	1.000	1.000	1.000						
Annual (TPY)	**0.100**	**0.100**	**0.100**						
Total Emission Rate:									
Hourly (lb/hr)	1.000	1.000	1.000						
Annual (TPY)	**0.100**	**0.100**	**0.100**						

PROPOSED OPERATING SCHEDULE
22 HRS/DAY
6,000 HRS/YEAR

Note 1: Emission factor from Ohio EPA RACM Table 2.18-1, p2-378 (Primary Crushing)
Note 2: Assumes PM10 is equal to PM
Note 3: Assumes PM2.5 is equal to PM10

EXAMPLE CALCULATIONS:
Maximum Stack Emission Rate (lb/hr) {PM,PM-10} =(gr/acfm) x (acfm) x (1 lb / 7000 grains) x (60 min / 1 hr)
Maximum Annual (Ton/yr) stack Emission Rates = (lb/hr emission rate) x (hours of operation per year at max. rate) x (ton/2000 lbs)

Uncontrolled Emission Calculations
CAM Applicability
East Jordan Foundry, LLC
Elmira, Michigan

Flow Diagram Designation
In-Duct Burners

Process Description:
In-Duct Burners
Control Device:

Natural Gas Combustion

Inputs	
1.5	= Max. Hourly Heat Input Rate (MMBtu/hr)
1020	= MMBtu/MMscf
1470.6	= Max. Hourly Fuel Usage Rate (standard cubic feet hour)
6000	= Maximum Operation (hours/year)
8.823529412	= Maximum Annual Fuel Usage (MMscf)

POLLUTANT	CAS #	Note 1 Emission Factor ($lb/10^6$ scf)	Maximum Emissions (lbs/hr)	(tpy)
PM/PM10/PM2.5	n/a	7.6	See BH Emissions for each Stk	
NOx	n/a	100.0	0.15	0.44
CO	n/a	84.0	0.12	0.37
Lead	n/a	0.0005	7.35E-07	2.21E-06
SO2	n/a	0.6	0.001	0.003
VOC	n/a	5.5	0.01	0.02
CO_2e	n/a	120,000	176.47	529.41
Arsenic (As)	7440-38-2	2.00E-04	2.94E-07	8.82E-07
Beryllium (Be)	7440-41-7	1.20E-05	1.76E-08	5.29E-08
Cadmium (Cd)	7440-43-9	1.10E-03	1.62E-06	4.85E-06
Chromium (Cr)	7440-47-3	1.40E-03	2.06E-06	6.18E-06
Cobalt (Co)	7440-48-4	8.40E-05	1.24E-07	3.71E-07
Manganese (Mn)	7439-96-5	3.80E-04	5.59E-07	1.68E-06
Mercury (Hg)	7439-97-6	2.60E-04	3.82E-07	1.15E-06
Nickel (Ni)	7440-02-0	2.10E-03	3.09E-06	9.26E-06
Selenium (Se)	7782-49-2	2.40E-05	3.53E-08	1.06E-07
POM/2-Methylnaphthalene	91-57-6	2.40E-05	3.53E-08	1.06E-07
POM/3-Methylchloranthrene	56-49-5	1.80E-06	2.65E-09	7.94E-09
POM/7,12-Dimethylbenz(a)anthracene	57-97-6	1.60E-05	2.35E-08	7.06E-08
POM/Acenaphthene	83-32-9	1.80E-06	2.65E-09	7.94E-09
POM/Acenaphthylene	203-96-8	1.80E-06	2.65E-09	7.94E-09
POM/Anthracene	120-12-7	2.40E-06	3.53E-09	1.06E-08
POM/Benz(a)anthracene	56-55-3	1.80E-06	2.65E-09	7.94E-09
Benzene	71-43-2	2.10E-03	3.09E-06	9.26E-06
POM/Benzo(a)pyrene	50-32-8	1.20E-06	1.76E-09	5.29E-09
POM/Benzo(b)fluoranthene	205-99-2	1.20E-06	1.76E-09	5.29E-09
POM/Benzo(g,h,i)perylene	191-24-2	1.20E-06	1.76E-09	5.29E-09
POM/Benzo(k)fluoranthene	205-82-3	1.80E-06	2.65E-09	7.94E-09
POM/Chrysene	218-01-9	1.80E-06	2.65E-09	7.94E-09
POM/Dibenzo(a,h)anthracene	53-70-3	1.20E-06	1.76E-09	5.29E-09
Dichlorobenzene	25321-22-6	1.20E-03	1.76E-06	5.29E-06
POM/Fluoranthene	206-44-0	3.00E-06	4.41E-09	1.32E-08
POM/Fluorene	86-73-7	2.80E-06	4.12E-09	1.24E-08
Formaldehyde	50-00-0	7.50E-02	1.10E-04	3.31E-04
Hexane	110-54-3	1.80E+00	2.65E-03	7.94E-03
POM/Indeno(1,2,3-cd)pyrene	193-39-5	1.80E-06	2.65E-09	7.94E-09
Naphthalene	91-20-3	6.10E-04	8.97E-07	2.69E-06
POM/Phenanathrene	85-01-8	1.70E-05	2.50E-08	7.50E-08
POM/Pyrene	129-00-0	5.00E-06	7.35E-09	2.21E-08
Toluene	108-88-3	3.40E-03	5.00E-06	1.50E-05
Total POM			1.29E-07	3.86E-07
Total HAPs			2.78E-03	8.33E-03

Note 1: FROM AP-42 Fifth Edition, Supplement D, TABLE 1.4-2&3&4. 7/98 External Combustion Sources 1.4-9. Many emission factors < than specific value. In this case, specific value used to error on conservative side

EXAMPLE CALCULATIONS:
Maximum Hourly Emission = Max.hourly Fuel Usage rate (standard cubic feet hour) x (Pollutant E.F.)
Maximum Yearly Emission = Max.Hourly Emission Rate (lb/hr) x (Maximum Hours of Operation)

Uncontrolled Emission Calculations
CAM Applicability
East Jordan Foundry, LLC
Elmira, Michigan

Flow Diagram Designation
Ladle Heaters

Process Description:
Ladle Heaters
Control Device:

Natural Gas Combustion

Inputs	
28.5	= Max. Hourly Heat Input Rate (MMBtu/hr)
1020	= MMBtu/MMscf
27941.2	= Max. Hourly Fuel Usage Rate (standard cubic feet hour)
6000	= Maximum Operation (hours/year)
167.6470588	= Maximum Annual Fuel Usage (MMscf)

POLLUTANT	CAS #	Note 1 Emission Factor ($lb/10^6$ scf)	Maximum Emissions (lbs/hr)	(tpy)
PM/PM10/PM2.5	n/a	7.6	0.21	0.64
NOx	n/a	100.0	2.79	8.38
CO	n/a	84.0	2.35	7.04
Lead	n/a	0.0005	1.40E-05	4.19E-05
SO2	n/a	0.6	0.017	0.050
VOC	n/a	5.5	0.15	0.46
CO_2e	n/a	120,000	3352.94	10058.82
Arsenic (As)	7440-38-2	2.00E-04	5.59E-06	1.68E-05
Beryllium (Be)	7440-41-7	1.20E-05	3.35E-07	1.01E-06
Cadmium (Cd)	7440-43-9	1.10E-03	3.07E-05	9.22E-05
Chromium (Cr)	7440-47-3	1.40E-03	3.91E-05	1.17E-04
Cobalt (Co)	7440-48-4	8.40E-05	2.35E-06	7.04E-06
Manganese (Mn)	7439-96-5	3.80E-04	1.06E-05	3.19E-05
Mercury (Hg)	7439-97-6	2.60E-04	7.26E-06	2.18E-05
Nickel (Ni)	7440-02-0	2.10E-03	5.87E-05	1.76E-04
Selenium (Se)	7782-49-2	2.40E-05	6.71E-07	2.01E-06
POM/2-Methylnaphthalene	91-57-6	2.40E-05	6.71E-07	2.01E-06
POM/3-Methylchloranthrene	56-49-5	1.80E-06	5.03E-08	1.51E-07
POM/7,12-Dimethylbenz(a)anthracene	57-97-6	1.60E-05	4.47E-07	1.34E-06
POM/Acenaphthene	83-32-9	1.80E-06	5.03E-08	1.51E-07
POM/Acenaphthylene	203-96-8	1.80E-06	5.03E-08	1.51E-07
POM/Anthracene	120-12-7	2.40E-06	6.71E-08	2.01E-07
POM/Benz(a)anthracene	56-55-3	1.80E-06	5.03E-08	1.51E-07
Benzene	71-43-2	2.10E-03	5.87E-05	1.76E-04
POM/Benzo(a)pyrene	50-32-8	1.20E-06	3.35E-08	1.01E-07
POM/Benzo(b)fluoranthene	205-99-2	1.20E-06	3.35E-08	1.01E-07
POM/Benzo(g,h,i)perylene	191-24-2	1.20E-06	3.35E-08	1.01E-07
POM/Benzo(k)fluoranthene	205-82-3	1.80E-06	5.03E-08	1.51E-07
POM/Chrysene	218-01-9	1.80E-06	5.03E-08	1.51E-07
POM/Dibenzo(a,h)anthracene	53-70-3	1.20E-06	3.35E-08	1.01E-07
Dichlorobenzene	25321-22-6	1.20E-03	3.35E-05	1.01E-04
POM/Fluoranthene	206-44-0	3.00E-06	8.38E-08	2.51E-07
POM/Fluorene	86-73-7	2.80E-06	7.82E-08	2.35E-07
Formaldehyde	50-00-0	7.50E-02	2.10E-03	6.29E-03
Hexane	110-54-3	1.80E+00	5.03E-02	1.51E-01
POM/Indeno(1,2,3-cd)pyrene	193-39-5	1.80E-06	5.03E-08	1.51E-07
Naphthalene	91-20-3	6.10E-04	1.70E-05	5.11E-05
POM/Phenanathrene	85-01-8	1.70E-05	4.75E-07	1.43E-06
POM/Pyrene	129-00-0	5.00E-06	1.40E-07	4.19E-07
Toluene	108-88-3	3.40E-03	9.50E-05	2.85E-04
Total POM			2.45E-06	7.34E-06
Total HAPs			5.28E-02	1.58E-01

Note 1: FROM AP-42 Fifth Edition, Supplement D, TABLE 1.4-2&3&4. 7/98 External Combustion Sources 1.4-9. Many emission factors < than specific value. In this case, specific value used to error on conservative side

EXAMPLE CALCULATIONS:
Maximum Hourly Emission = Max.hourly Fuel Usage rate (standard cubic feet hour) x (Pollutant E.F.)
Maximum Yearly Emission = Max.Hourly Emission Rate (lb/hr) x (Maximum Hours of Operation)

Uncontrolled Emission Calculations
CAM Applicability
East Jordan Foundry, LLC
Elmira, Michigan

Maximum Yearly Capacity
128,000 Tons/Year

Flow Diagram Designation
LML Pouring & Cooling

Maximum Hourly Capacity
28.00 Tons/Hour

Process Description:
East Jordan Foundry, LLC
LML Pouring & Cooling
Control Device: Baghouses A/B, D
SCC Code:
Control Device Outlet: 0.0020 gr/dscf gr/dscf
Airflow: 129,000 acfm acfm
Stack Gas Temperature: °F

Facility Process Name:			Criteria Pollutants								
	LML Pouring & Cooling										
Emission Factor Basis:			PM	PM10	PM2.5	SOx	NOx	VOC	CO	Lead	CO_2e
Emission Factors:		lb/ton	0.410	0.410	0.336	0.260	0.068	1.241	6.523	0.00048	24.654
(source)			Note 1	Note 1	Note 8	Note 2	Note 6	Note 5	Note 4	Note 3	Note 7
		Capture Efficiency									
		Control Efficiency									
		Building Capt. Eff									
Maximum Stack Emission Rate:											
	Hourly (lb/hr)									2.98E-03	
	Annual (TPY)									**4.47E-06**	
Maximum Fugitive Emission Rate:											
	Hourly (lb/hr)		11.480	11.480	9.414	7.280	1.917	34.748	182.655	1.34E-02	690.305
	Annual (TPY)		**26.240**	**26.240**	**21.517**	**16.640**	**4.381**	**79.424**	**417.497**	**3.07E-02**	**1577.840**
Total Emission Rate:											
	Hourly (lb/hr)		11.480	11.480	9.414	7.280	1.917	34.748	182.655	1.64E-02	690.305
	Annual (TPY)		**26.240**	**26.240**	**21.517**	**16.640**	**4.381**	**79.424**	**417.497**	**3.07E-02**	**1577.840**

PROPOSED OPERATING SCHEDULE
24 HRS/DAY
6,000 HRS/YEAR

Note 1: Stack test at Quality Castings, Orrville, OH.
Note 2: 2019 Compliance Test plus 20% allowance for testing and measurement variability each.
Note 3: From Stack testing at Foundry in Mexico (CERP data)
Note 4: EJIW Foundry Stack Testing (Oct 2010). Results used with Wheland and Technikon information to distribute between melting, pouring, cooling and shakeout.
Note 5: EJIW Stack testing (March 2002) and Technikon #1410-117 FU
Note 6: EJIW Stack Testing (March 2002, July 2010)
Note 7: EJIW-Ardmore Foundry Stack Testing (July 2010). Average rate calculated between SS-01 & SS-03. Methane and Nitrous Oxide emissions are not known. Background concentration of CO_2 was not considered.
Note 8: Emission factor based on USEPA PM Calculator (March 2012) PM to PM2.5 ratio and uncontrolled PM emission factor.
Note 9: This shows maximum emissions from this line. Combined group limit on Pouring and Cooling of 28 tph, 128,000 tpy throughput due to max melt rate upstream.
Note 10: Compliance with gaseous criteria pollutants to be demonstrated by summing emissions across all applicable stacks.

EXAMPLE CALCULATIONS:
Maximum Stack Emission Rate (lb/hr) {PM,PM-10} =(gr/acfm) x (acfm) x (1 lb / 7000 grains) x (60 min / 1 hr)
Maximum Stack Emission Rate (lb/hr) {Lead} =(gr/acfm) x (acfm) x (1 lb / 7000 grains) x (60 min / 1 hr) x (EF for Lead/EF for PM-10)
Maximum Stack Emissions Rate (lb/hr) {SOx,NOx, VOC, CO} =(Max. Rated Capacity ton/hr) x (EF in lb/ton) x (Capture Eff./100)
Maximum Annual (Ton/yr) PM, PM10 and lead stack Emission Rates = (lb/hr emission rate) x (hours of operation per year at max. rate) x (ton/2000 lbs)
Maximum Annual (ton/yr) SOx NOx, VOC and CO stack emissions= (Hourly stack emissions (lb/hr)/ hourly Process rate (ton/hr) x (Annual process rate (tons/yr) x (ton/2000 lbs)
Maximum Fugitive Emission Rate (lb/hr) = ((1 - Capture Efficiency/100) x (Emission Factor) x (Melt ton/hr) x (1-(Settling Factor)/100)
Maximum Annual Fugitive Emissions (ton/yr)= (Hourly fugitive emissions (lb/hr)/ hourly Process rate (ton/hr) x (Annual process rate (tons/yr) x (ton/2000 lbs)
Total Emission Rate (lb/hr) = (Maximum Stack Emission Rate lb/hr) + (Maximum Fugitive Emission Rate lb/hr)
Total Emission Rates Annual (TPY)= (annual stack emissions (ton/yr)) + (annual fugitive emissions (ton/yr))

Uncontrolled Emission Calculations
CAM Applicability
East Jordan Foundry, LLC
Elmira, Michigan

Maximum Yearly Capacity
128,000 Tons/Year

Flow Diagram Designation
1230 Pouring & Cooling

Maximum Hourly Capacity
28.00 Tons/Hour

Process Description:
East Jordan Foundry, LLC
1230 Pouring & Cooling
Control Device: Baghouses A/B, D
SCC Code:
Control Device Outlet: 0.0020 gr/dscf gr/dscf
Airflow: 129,000 acfm acfm
Stack Gas Temperature: °F

Facility Process Name:		Criteria Pollutants								
1230 Pouring & Cooling										
Emission Factor Basis:		PM	PM10	PM2.5	SOx	NOx	VOC	CO	Lead	CO_2e
Emission Factors:	lb/ton	0.410	0.410	0.336	0.260	0.068	1.241	6.523	0.00048	24.654
(source)		Note 1	Note 1	Note 8	Note 2	Note 6	Note 5	Note 4	Note 3	Note 7
	Capture Efficiency									
	Control Efficiency									
	Building Capt. Eff									
Maximum Stack Emission Rate:										
Hourly (lb/hr)										
Annual (TPY)										
Maximum Fugitive Emission Rate:										
Hourly (lb/hr)		11.480	11.480	9.414	7.280	1.917	34.748	182.655	1.34E-02	690.305
Annual (TPY)		**26.240**	**26.240**	**21.517**	**16.640**	**4.381**	**79.424**	**417.497**	**3.07E-02**	**1577.840**
Total Emission Rate:										
Hourly (lb/hr)		11.480	11.480	9.414	7.280	1.917	34.748	182.655	1.34E-02	690.305
Annual (TPY)		**26.240**	**26.240**	**21.517**	**16.640**	**4.381**	**79.424**	**417.497**	**3.07E-02**	**1577.840**

PROPOSED OPERATING SCHEDULE
24 HRS/DAY
6,000 HRS/YEAR

Note 1: Stack test at Quality Castings, Orrville, OH.
Note 2: 2019 Compliance Test plus 20% allowance for testing and measurement variability each.
Note 3: From Stack testing at Foundry in Mexico (CERP data)
Note 4: EJIW Foundry Stack Testing (Oct 2010). Results used with Wheland and Technikon information to distribute between melting, pouring, cooling and shakeout.
Note 5: EJIW Stack testing (March 2002) and Technikon #1410-117 FU. Includes Mold Making emissions.
Note 6: EJIW Stack Testing (March 2002, July 2010)
Note 7: EJIW-Ardmore Foundry Stack Testing (July 2010). Average rate calculated between SS-01 & SS-03. Methane and Nitrous Oxide emissions are not known. Background concentration of CO_2 was not considered.
Note 8: Emission factor based on USEPA PM Calculator (March 2012) PM to PM2.5 ratio and uncontrolled PM emission factor.
Note 9: This shows maximum emissions from this line. Combined group limit on Pouring and Cooling of 28 tph, 128,000 tpy throughput due to max melt rate upstream.
Note 10: Compliance with gaseous criteria pollutants to be demonstrated by summing emissions across all applicable stacks.

EXAMPLE CALCULATIONS:
Maximum Stack Emission Rate (lb/hr) {PM,PM-10} =(gr/acfm) x (acfm) x (1 lb / 7000 grains) x (60 min / 1 hr)
Maximum Stack Emission Rate (lb/hr) {Lead} =(gr/acfm) x (acfm) x (1 lb / 7000 grains) x (60 min / 1 hr) x (EF for Lead/EF for PM-10)
Maximum Stack Emissions Rate (lb/hr) {SOx,NOx, VOC, CO} =(Max. Rated Capacity ton/hr) x (EF in lb/ton) x (Capture Eff./100)
Maximum Annual (Ton/yr) PM, PM10 and lead stack Emission Rates = (lb/hr emission rate) x (hours of operation per year at max. rate) x (ton/2000 lbs)
Maximum Annual (ton/yr) SOx NOx, VOC and CO stack emissions= (Hourly stack emissions (lb/hr)/ hourly Process rate (ton/hr) x (Annual process rate (tons/yr) x (ton/2000 lbs)
Maximum Fugitive Emission Rate (lb/hr) = ((1 - Capture Efficiency/100) x (Emission Factor) x (Melt ton/hr) x (1-(Settling Factor)/100)
Maximum Annual Fugitive Emissions (ton/yr)= (Hourly fugitive emissions (lb/hr)/ hourly Process rate (ton/hr) x (Annual process rate (tons/yr) x (ton/2000 lbs)
Total Emission Rate (lb/hr) = (Maximum Stack Emission Rate lb/hr) + (Maximum Fugitive Emission Rate lb/hr)
Total Emission Rates Annual (TPY)= (annual stack emissions (ton/yr)) + (annual fugitive emissions (ton/yr))

Uncontrolled Emission Calculations
CAM Applicability
East Jordan Foundry, LLC
Elmira, Michigan

Maximum Yearly Capacity
128,000 Tons/Year

Flow Diagram Designation
LML Shakeout

Maximum Hourly Capacity
28.00 Tons/Hour

Process Description:
East Jordan Foundry, LLC
LML Shakeout
Control Device: Baghouses C, D, E
SCC Code:
Control Device Outlet: gr/dscf gr/dscf
Airflow: acfm acfm
Stack Gas Temperature: °F

Facility Process Name:			Criteria Pollutants								
	LML Shakeout										
Emission Factor Basis:			PM	PM10	PM2.5	SOx	NOx	VOC	CO	Lead	CO_2e
Emission Factors:		lb/ton	3.20	2.24	1.34		0.002	0.528	1.592	1.26E-04	
(source)			Note 1	Note 6	Note 6		Note 5	Note 4	Note 2	Note 3	Note 4
		Capture Efficiency									
		Control Efficiency									
		Building Capt. Eff									
Maximum Stack Emission Rate:											
	Hourly (lb/hr)										
	Annual (TPY)										
Maximum Fugitive Emission Rate:											
	Hourly (lb/hr)		89.600	62.720	37.524		0.056	14.784	44.574	3.53E-03	
	Annual (TPY)		**204.800**	**143.360**	**85.770**		**0.128**	**33.792**	**101.883**	**8.06E-03**	
Total Emission Rate:											
	Hourly (lb/hr)		89.600	62.720	37.524		0.056	14.784	44.574	3.53E-03	
	Annual (TPY)		**204.800**	**143.360**	**85.770**		**0.128**	**33.792**	**101.883**	**8.06E-03**	

PROPOSED OPERATING SCHEDULE
22 HRS/DAY
6,000 HRS/YEAR

Note 1: Emission factor from FIRE 6.25 SCC 3-04-003-31
Note 2: EJIW-Ardmore Foundry Stack Testing (Oct 2010). Results used with Wheland and Technikon information to distribute between melting, pouring, cooling and shakeout.
Note 3: Factors: Baseline Emissions from Automotive Foundries in Mexico"
Note 4: C02e emissions included in Pouring & Mold Cooling Tab
Note 5: Emission factor from EJIW stack test (July 2010)
Note 6: Emission factor based on USEPA PM Calculator (March 2012) PM to PM2.5 ratio and uncontrolled PM emission factor.
Note 7: Max emissions from this line. Combined group limit on Shakeout of 28 tph, 128,000 tpy throughput due to max melt rate upstream

EXAMPLE CALCULATIONS:
Maximum Stack Emission Rate (lb/hr) {PM,PM-10} =(gr/acfm) x (acfm) x (1 lb / 7000 grains) x (60 min / 1 hr)
Maximum Stack Emission Rate (lb/hr) {Lead} =(gr/acfm) x (acfm) x (1 lb / 7000 grains) x (60 min / 1 hr) x (EF for Lead/EF for PM-10)
Maximum Stack Emissions Rate (lb/hr) {VOC, CO} =(Max. Rated Capacity ton/hr) x (EF in lb/ton) x (Capture Eff./100)
Maximum Annual (Ton/yr) PM, PM10 and lead stack Emission Rates = (lb/hr emission rate) x (hours of operation per year at max. rate) x (ton/2000 lbs)
Maximum Annual (ton/yr) VOC and CO stack emissions= (Hourly stack emissions (lb/hr)/ hourly Process rate (ton/hr) x (Annual process rate (tons/yr) x (ton/2000 lbs)
Maximum Fugitive Emission Rate (lb/hr) = ((1 - Capture Efficiency/100) x (Emission Factor) x (Melt ton/hr) x (1-(Settling Factor)/100)
Maximum Annual Fugitive Emissions (ton/yr)= (Hourly fugitive emissions (lb/hr)/ hourly Process rate (ton/hr) x (Annual process rate (tons/yr) x (ton/2000 lbs)
Total Emission Rate (lb/hr) = (Maximum Stack Emission Rate lb/hr) + (Maximum Fugitive Emission Rate lb/hr)
Total Emission Rates Annual (TPY)= (annual stack emissions (ton/yr)) + (annual fugitive emissions (ton/yr))

Uncontrolled Emission Calculations
CAM Applicability
East Jordan Foundry, LLC
Elmira, Michigan

Maximum Yearly Capacity
128,000 Tons/Year

Flow Diagram Designation
1230 Shakeout

Maximum Hourly Capacity
28.00 Tons/Hour

Process Description:
East Jordan Foundry, LLC
1230 Shakeout
Control Device: Baghouses C, D, E
SCC Code:
Control Device Outlet: gr/dscf gr/dscf
Airflow: acfm acfm
Stack Gas Temperature: °F

Facility Process Name:			Criteria Pollutants								
1230 Shakeout											
Emission Factor Basis:			**PM**	**PM10**	**PM2.5**	**SOx**	**NOx**	**VOC**	**CO**	**Lead**	**CO_2e**
Emission Factors:		lb/ton	3.20	2.24	1.34		0.002	0.528	1.592	1.26E-04	
(source)			Note 1	Note 6	Note 6		Note 5	Note 4	Note 2	Note 3	Note 4
		Capture Efficiency									
		Control Efficiency									
		Building Capt. Eff									
Maximum Stack Emission Rate:											
	Hourly (lb/hr)										
	Annual (TPY)										
Maximum Fugitive Emission Rate:											
	Hourly (lb/hr)		89.600	62.720	37.524		0.056	14.784	44.574	3.53E-03	
	Annual (TPY)		**204.800**	**143.360**	**85.770**		**0.128**	**33.792**	**101.883**	**8.06E-03**	
Total Emission Rate:											
	Hourly (lb/hr)		89.600	62.720	37.524		0.056	14.784	44.574	3.53E-03	
	Annual (TPY)		**204.800**	**143.360**	**85.770**		**0.128**	**33.792**	**101.883**	**8.06E-03**	

PROPOSED OPERATING SCHEDULE
22 HRS/DAY
6,000 HRS/YEAR

Note 1: Emission factor from FIRE 6.25 SCC 3-04-003-31
Note 2: EJIW-Ardmore Foundry Stack Testing (Oct 2010). Results used with Wheland and Technikon information to distribute between melting, pouring, cooling and shakeout.
Note 3: Factors: Baseline Emissions from Automotive Foundries in Mexico"
Note 4: C02e emissions included in Pouring & Mold Cooling Tab
Note 5: Emission factor from EJIW stack test (July 2010)
Note 6: Emission factor based on USEPA PM Calculator (March 2012) PM to PM2.5 ratio and uncontrolled PM emission factor.
Note 7: Max emissions from this line. Combined group limit on Shakeout of 28 tph, 128,000 tpy throughput due to max melt rate upstream

EXAMPLE CALCULATIONS:
Maximum Stack Emission Rate (lb/hr) {PM,PM-10} =(gr/acfm) x (acfm) x (1 lb / 7000 grains) x (60 min / 1 hr)
Maximum Stack Emission Rate (lb/hr) {Lead} =(gr/acfm) x (acfm) x (1 lb / 7000 grains) x (60 min / 1 hr) x (EF for Lead/EF for PM-10)
Maximum Stack Emissions Rate (lb/hr) {VOC, CO} =(Max. Rated Capacity ton/hr) x (EF in lb/ton) x (Capture Eff./100)
Maximum Annual (Ton/yr) PM, PM10 and lead stack Emission Rates = (lb/hr emission rate) x (hours of operation per year at max. rate) x (ton/2000 lbs)
Maximum Annual (ton/yr) VOC and CO stack emissions= (Hourly stack emissions (lb/hr)/ hourly Process rate (ton/hr) x (Annual process rate (tons/yr) x (ton/2000 lbs)
Maximum Fugitive Emission Rate (lb/hr) = ((1 - Capture Efficiency/100) x (Emission Factor) x (Melt ton/hr) x (1-(Settling Factor)/100)
Maximum Annual Fugitive Emissions (ton/yr)= (Hourly fugitive emissions (lb/hr)/ hourly Process rate (ton/hr) x (Annual process rate (tons/yr) x (ton/2000 lbs)
Total Emission Rate (lb/hr) = (Maximum Stack Emission Rate lb/hr) + (Maximum Fugitive Emission Rate lb/hr)
Total Emission Rates Annual (TPY)= (annual stack emissions (ton/yr)) + (annual fugitive emissions (ton/yr))

Uncontrolled Emission Calculations
CAM Applicability
East Jordan Foundry, LLC
Elmira, Michigan

Maximum Yearly Capacity
128,000 Tons/Year

Flow Diagram Designation
Shotblast

Maximum Hourly Capacity
28.00 Tons/Hour

Process Description:
East Jordan Foundry, LLC
Shotblast
Control Device: Baghouses H/J
SCC Code:
Control Device Outlet: gr/dscf
Airflow: acfm
Stack Gas Temperature: °F

Facility Process Name:		Criteria Pollutants								
Shotblast										
Emission Factor Basis:		**PM**	**PM10**	**PM2.5**	**SOx**	**NOx**	**VOC**	**CO**	**Lead**	**CO_2e**
Emission Factors:	lb/ton	15.50	1.70	1.70						
(source)		Note 1	Note 2	Note 3						
	Capture Efficiency									
	Control Efficiency									
	Building Capt. Eff									
Maximum Stack Emission Rate:										
	Hourly (lb/hr)									
	Annual (TPY)									
Maximum Fugitive Emission Rate:										
	Hourly (lb/hr)	434.000	47.600	47.600						
	Annual (TPY)	**992.000**	**108.800**	**108.800**						
Total Emission Rate:										
	Hourly (lb/hr)	434.000	47.600	47.600						
	Annual (TPY)	**992.000**	**108.800**	**108.800**						

PROPOSED OPERATING SCHEDULE
24 HRS/DAY
6,000 HRS/YEAR

Note 1: Emission factor from Bernard S. Gutow article
Note 2: Emission factor from FIRE 6.25 SCC 3-04-003-40
Note 3: Assumes $PM^{2.5}$ is equal to PM_{10}

EXAMPLE CALCULATIONS:
Maximum Stack Emission Rate (lb/hr) {PM,PM-10} =(gr/acfm) x (acfm) x (1 lb / 7000 grains) x (60 min / 1 hr)
Maximum Annual (Ton/yr) stack Emission Rates = (lb/hr emission rate) x (hours of operation per year at max. rate) x (ton/2000 lbs)
Maximum Fugitive Emission Rate (lb/hr) = ((1 - Capture Efficiency/100) x (Emission Factor) x (Melt ton/hr) x (1-(Settling Factor)/100)
Maximum Annual Fugitive Emissions (ton/yr)= (Hourly fugitive emissions (lb/hr)/ hourly Process rate (ton/hr) x (Annual process rate (tons/yr) x (ton/2000 lbs)
Total Emission Rate (lb/hr) = (Maximum Stack Emission Rate lb/hr) + (Maximum Fugitive Emission Rate lb/hr)
Total Emission Rates Annual (TPY)= (annual stack emissions (ton/yr)) + (annual fugitive emissions (ton/yr))

Uncontrolled Emission Calculations
CAM Applicability
East Jordan Foundry, LLC
Elmira, Michigan

Maximum Yearly Capacity
128,000 Tons/Year

Flow Diagram Designation
Grinding

Maximum Hourly Capacity
28.00 Tons/Hour

Process Description:
East Jordan Foundry, LLC
Grinding
Control Device: Baghouses H/J
SCC Code:
Control Device Outlet: gr/dscf
Airflow: acfm
Stack Gas Temperature: °F

Facility Process Name:			Criteria Pollutants								
	Grinding										
Emission Factor Basis:			PM	PM10	PM2.5	SOx	NOx	VOC	CO	Lead	CO_2e
Emission Factors:		lb/ton	1.60	0.005	0.005						
(source)			Note 1	Note 2	Note 3						
		Capture Efficiency									
		Control Efficiency									
		Building Capt. Eff									
Maximum Stack Emission Rate:											
	Hourly (lb/hr)										
	Annual (TPY)										
Maximum Fugitive Emission Rate:											
	Hourly (lb/hr)		44.800	0.126	0.126						
	Annual (TPY)		**102.400**	**0.288**	**0.288**						
Total Emission Rate:											
	Hourly (lb/hr)		44.800	0.126	0.126						
	Annual (TPY)		**102.400**	**0.288**	**0.288**						

PROPOSED OPERATING SCHEDULE
24 HRS/DAY
6,000 HRS/YEAR

Note 1: Emission factor from Bernard S. Gutow article
Note 2: Emission factor from FIRE 6.25 SCC 3-04-003-60
Note 3: Assumes PM2.5 is equal to PM10

EXAMPLE CALCULATIONS:
Maximum Stack Emission Rate (lb/hr) {PM,PM-10} =(gr/acfm) x (acfm) x (1 lb / 7000 grains) x (60 min / 1 hr)
Maximum Annual (Ton/yr) stack Emission Rates = (lb/hr emission rate) x (hours of operation per year at max. rate) x (ton/2000 lbs)
Maximum Fugitive Emission Rate (lb/hr) = ((1 - Capture Efficiency/100) x (Emission Factor) x (Melt ton/hr) x (1-(Settling Factor)/100)
Maximum Annual Fugitive Emissions (ton/yr)= (Hourly fugitive emissions (lb/hr)/ hourly Process rate (ton/hr) x (Annual process rate (tons/yr) x (ton/2000 lbs)
Total Emission Rate (lb/hr) = (Maximum Stack Emission Rate lb/hr) + (Maximum Fugitive Emission Rate lb/hr)
Total Emission Rates Annual (TPY)= (annual stack emissions (ton/yr)) + (annual fugitive emissions (ton/yr))

Uncontrolled Emission Calculations
CAM Applicability
East Jordan Foundry, LLC
Elmira, Michigan

Maximum Yearly Capacity
1,920,000 Tons/Year

Flow Diagram Designation
Sand Handling & Storage (H&S)

Maximum Hourly Capacity
390.00 Tons/Hour

Process Description:
East Jordan Foundry, LLC
Sand Handling & Storage (H&S)
Control Device: Baghouse E, F, G, H/J
SCC Code:
Control Device Outlet: gr/dscf
Airflow: acfm
Stack Gas Temperature: °F

Facility Process Name:		Criteria Pollutants								
Sand Handling & Storage (H&S)										
Emission Factor Basis:		PM	PM10	PM2.5	SOx	NOx	VOC	CO	Lead	CO_2e
Emission Factors:	lb/ton	3.60	0.54	0.54						
(source)		Note 1,3	Note 1,3	Note 2,3			Note 4			
Capture Efficiency										
Control Efficiency										
Building Capt. Eff										
Maximum Stack Emission Rate:										
Hourly (lb/hr)										
Annual (TPY)										
Maximum Fugitive Emission Rate:										
Hourly (lb/hr)		1404.000	210.600	210.600						
Annual (TPY)		**3456.000**	**518.400**	**518.400**						
Total Emission Rate:										
Hourly (lb/hr)		1404.000	210.600	210.600						
Annual (TPY)		**3456.000**	**518.400**	**518.400**						

PROPOSED OPERATING SCHEDULE
22 HRS/DAY
6,000 HRS/YEAR

Note 1: Emission factor from FIRE 6.25 SCC 3-04-003-50
Note 2: Assumes PM2.5 is equal to PM10
Note 3: Includes mold making PM emissions.
Note 4: Mold making VOC emissions included with Pouring & Cooling VOC EF.

EXAMPLE CALCULATIONS:
Maximum Stack Emission Rate (lb/hr) {PM,PM-10} =(gr/acfm) x (acfm) x (1 lb / 7000 grains) x (60 min / 1 hr)
Maximum Annual (Ton/yr) stack Emission Rates = (lb/hr emission rate) x (hours of operation per year at max. rate) x (ton/2000 lbs)
Maximum Fugitive Emission Rate (lb/hr) = ((1 - Capture Efficiency/100) x (Emission Factor) x (Melt ton/hr) x (1-(Settling Factor)/100)
Maximum Annual Fugitive Emissions (ton/yr)= (Hourly fugitive emissions (lb/hr)) x (8760 hrs/yr) x (ton/2000 lbs)
Total Emission Rate (lb/hr) = (Maximum Stack Emission Rate lb/hr) + (Maximum Fugitive Emission Rate lb/hr)
Total Emission Rates Annual (TPY)= (annual stack emissions (ton/yr)) + (annual fugitive emissions (ton/yr))

Uncontrolled Emission Calculations
CAM Applicability
East Jordan Foundry, LLC
Elmira, Michigan

Maximum Yearly Capacity
1,500 Tons/Year

Flow Diagram Designation
Shell Coremaking

Maximum Hourly Capacity
0.48 Tons/Hour

Process Description:
East Jordan Foundry, LLC
Shell Coremaking
Control Device: Baghouse L
SCC Code:
Control Device Outlet: gr/dscf
Airflow: acfm
Stack Gas Temperature: °F

Facility Process Name:		Criteria Pollutants								
Shell Coremaking										
Emission Factor Basis:		PM	PM10	PM2.5	SOx	NOx	VOC	CO	Lead	CO_2e
Emission Factors:	lb/ton	0.35	0.35	0.11			0.2%			
(source)		Note 1	Note 1	Note 2			Note 3			
Capture Efficiency										
Control Efficiency										
Building Capt. Eff										
Maximum Stack Emission Rate:										
Hourly (lb/hr)										
Annual (TPY)										
Maximum Fugitive Emission Rate:										
Hourly (lb/hr)		0.168	0.168	0.050			1.824			
Annual (TPY)		0.263	0.263	0.079			2.850			
Total Emission Rate:										
Hourly (lb/hr)		0.168	0.168	0.050			1.824			
Annual (TPY)		0.263	0.263	0.079			2.850			

PROPOSED OPERATING SCHEDULE
24 HRS/DAY
6,000 HRS/YEAR

Note 1: Ohio RACM Guide, Page 2-219, Table 2.7-1, Emission Factor #15 gives uncontrolled emission factors of 0.3 lb/ton of sand mixed for mixing and 0.35 lb/ton of cores made from making the cores. No mixing will be conducted, the shell sand will be input directly into the machines. Therefore an emission factor of 0.35 lb/ton of cores made will be utilized.
Note 2: Emission factor based on USEPA PM Calculator (March 2012) PM to PM2.5 ratio and uncontrolled PM emission factor.
Note 3: %wt - Discussions w/Borden rep. Regarding Super F E19E19 MSDS

EXAMPLE CALCULATIONS:
Maximum Fugitive Emission Rate (lb/hr) = (Emission Factor) x (process weight rate (ton/hr)) x (1-(Settling Factor)/100)
Annual (TPY) Emission Rates = (lb/hr emission rate) x (1/ Maximum Hourly Process Rate (tons/hr)) x (Annual process weight rate (tons/yr))x (ton/2000)

East Jordan Foundry, LLC
HAP Emission Calculations
Shell Coremaking

HAPs	CAS #	Emission Factor %wt	Emissions lbs/hr	Emissions tons/yr	
Antimony (Sb)	7440-36-0				
Arsenic (As)	7440-38-2				
Beryllium (Be)	7440-41-7				
Cadmium (Cd)	7440-43-9				
Chromium (Cr)	7440-47-3				
Cobalt (Co)	7440-48-4				
Lead (Pb)	7439-92-1				
Manganese (Mn)	7439-96-5				
Mercury (Hg)	7439-97-6				
Nickel (Ni)	7440-02-0				
Selenium (Se)	7782-49-2				
Acetaldehyde	75-07-0				
Dimethylnaphthalenes	28804-88-8				
Cresol	1319-77-3				
Methylnaphthalenes	90-12-0				
Propionaldehyde	123-38-6				
Methylene diphenyl diisocyanate (MDI)	101-68-8				
4,4-methylenedianiline (MBA)	101-77-9				
Formaldehyde	50-00-0	0.02%	0.19	0.30	Note 3
Cumene	98-82-8				
Benzene	71-43-2				
O-Xylene	95-47-6				
M-Xylene	108-38-3				
Phenol	108-95-2	0.08%	0.77	1.20	Note 3
Naphthalene	91-20-3				
Ethyl Benzene	100-41-4				
Hydrogen Flouride	7664-39-3				
Toluene	108-88-3				
P-Xylene	106-42-3				
Hexane	110-54-3				
Xylenes	1330-20-7				
o-Cresol	95-48-7				
Styrene	100-42-5				
Acetophenone	98-86-2				
Dibenzofurans	132-64-9				
Nitrobenzene	98-95-3				
Total HAPs			9.60E-01	1.50E+00	

Uncontrolled Emission Calculations
CAM Applicability
East Jordan Foundry, LLC
Elmira, Michigan

Flow Diagram Designation
Shell Core NG

Process Description:
Shell Core NG
Control Device: None

Natural Gas Combustion

Inputs

3	= Max. Hourly Heat Input Rate (MMBtu/hr) Note 1
1020	= MMBtu/MMscf
2941.2	= Max. Hourly Fuel Usage Rate (standard cubic feet hour)
6000	= Maximum Operation (hours/year)
17.64706	= Maximum Annual Fuel Usage (MMscf)

POLLUTANT	CAS #	Note 2 Emission Factor ($lb/10^6$ scf)	Maximum Emissions (lbs/hr)	Maximum Emissions (tpy)
PM/PM10/PM2.5	n/a	7.6	0.02	6.71E-02
NOx	n/a	100.0	0.29	8.82E-01
CO	n/a	84.0	0.25	7.41E-01
Lead	n/a	0.0005	1.47E-06	4.41E-06
SO2	n/a	0.6	0.002	5.29E-03
VOC	n/a	5.5	0.02	4.85E-02
CO_2e	n/a	120,000	352.94	1.06E+03
Arsenic (As)	7440-38-2	2.00E-04	5.88E-07	1.76E-06
Beryllium (Be)	7440-41-7	1.20E-05	3.53E-08	1.06E-07
Cadmium (Cd)	7440-43-9	1.10E-03	3.24E-06	9.71E-06
Chromium (Cr)	7440-47-3	1.40E-03	4.12E-06	1.24E-05
Cobalt (Co)	7440-48-4	8.40E-05	2.47E-07	7.41E-07
Manganese (Mn)	7439-96-5	3.80E-04	1.12E-06	3.35E-06
Mercury (Hg)	7439-97-6	2.60E-04	7.65E-07	2.29E-06
Nickel (Ni)	7440-02-0	2.10E-03	6.18E-06	1.85E-05
Selenium (Se)	7782-49-2	2.40E-05	7.06E-08	2.12E-07
POM/2-Methylnaphthalene	91-57-6	2.40E-05	7.06E-08	2.12E-07
POM/3-Methylchloranthrene	56-49-5	1.80E-06	5.29E-09	1.59E-08
POM/7,12-Dimethylbenz(a)anthracene	57-97-6	1.60E-05	4.71E-08	1.41E-07
POM/Acenaphthene	83-32-9	1.80E-06	5.29E-09	1.59E-08
POM/Acenaphthylene	203-96-8	1.80E-06	5.29E-09	1.59E-08
POM/Anthracene	120-12-7	2.40E-06	7.06E-09	2.12E-08
POM/Benz(a)anthracene	56-55-3	1.80E-06	5.29E-09	1.59E-08
Benzene	71-43-2	2.10E-03	6.18E-06	1.85E-05
POM/Benzo(a)pyrene	50-32-8	1.20E-06	3.53E-09	1.06E-08
POM/Benzo(b)fluoranthene	205-99-2	1.20E-06	3.53E-09	1.06E-08
POM/Benzo(g,h,i)perylene	191-24-2	1.20E-06	3.53E-09	1.06E-08
POM/Benzo(k)fluoranthene	205-82-3	1.80E-06	5.29E-09	1.59E-08
POM/Chrysene	218-01-9	1.80E-06	5.29E-09	1.59E-08
POM/Dibenzo(a,h)anthracene	53-70-3	1.20E-06	3.53E-09	1.06E-08
Dichlorobenzene	25321-22-6	1.20E-03	3.53E-06	1.06E-05
POM/Fluoranthene	206-44-0	3.00E-06	8.82E-09	2.65E-08
POM/Fluorene	86-73-7	2.80E-06	8.24E-09	2.47E-08
Formaldehyde	50-00-0	7.50E-02	2.21E-04	6.62E-04
Hexane	110-54-3	1.80E+00	5.29E-03	1.59E-02
POM/Indeno(1,2,3-cd)pyrene	193-39-5	1.80E-06	5.29E-09	1.59E-08
Naphthalene	91-20-3	6.10E-04	1.79E-06	5.38E-06
POM/Phenanathrene	85-01-8	1.70E-05	5.00E-08	1.50E-07
POM/Pyrene	129-00-0	5.00E-06	1.47E-08	4.41E-08
Toluene	108-88-3	3.40E-03	1.00E-05	3.00E-05
Total POM			2.58E-07	7.73E-07
Total HAPs			5.55E-03	1.67E-02

Note 1: Two (2) machines - 0.5 MMBTU/HR each
Note 2: FROM AP-42 Fifth Edition, Supplement D, TABLE 1.4-2&3&4. 7/98 External Combustion Sources 1.4-9. Many emission factors < than specific value. In this case, specific value used to error on conservative side

EXAMPLE CALCULATIONS:
Maximum Hourly Emission = Max.hourly Fuel Usage rate (standard cubic feet hour) x (Pollutant E.F.)
Maximum Yearly Emission = Max.Hourly Emission Rate (lb/hr) x (Maximum Hours of Operation)

Uncontrolled Emission Calculations
CAM Applicability
East Jordan Foundry, LLC
Elmira, Michigan

Maximum Yearly Capacity
3,000 Tons/Year

Flow Diagram Designation
PUCB Coremaking

Maximum Hourly Capacity
12.77 Tons/Hour

Process Description:
East Jordan Foundry, LLC
PUCB Coremaking
Control Device: Baghouse L
SCC Code:
Control Device Outlet: gr/dscf
Airflow: acfm
Stack Gas Temperature: °F

Facility Process Name:	Criteria Pollutants								
PUCB Coremaking									
Emission Factor Basis:	PM	PM10	PM2.5	SOx	NOx	VOC	CO	Lead	CO_2e
Emission Factors:	0.65	0.65	0.65						
(source)	Note 1	Note 1	Note 1						
Capture Efficiency									
Control Efficiency									
Building Capt. Eff									
Maximum Stack Emission Rate:									
Hourly (lb/hr)	See Controlling BH(s) for Stk Emissions								
Annual (TPY)	See Controlling BH(s) for Stk Emissions								
Maximum Fugitive Emission Rate:									
Hourly (lb/hr)	8.301	8.301	8.301						
Annual (TPY)	**0.975**	**0.975**	**0.975**						
Total Emission Rate:									
Hourly (lb/hr)	8.301	8.301	8.301						
Annual (TPY)	**0.975**	**0.975**	**0.975**						

PROPOSED OPERATING SCHEDULE
24 HRS/DAY
6,000 HRS/YEAR

Note 1: Ohio RACM Guide, Page 2-219, Table 2.7-1

EXAMPLE CALCULATIONS:
Maximum Fugitive Emission Rate (lb/hr) = (Emission Factor) x (process weight rate (ton/hr)) x (1-(Settling Factor)/100)
Annual (TPY) Emission Rates = (lb/hr emission rate) x (1/ Maximum Hourly Process Rate (tons/hr)) x (Annual process weight rate (tons/yr))x (ton/2000)

Uncontrolled Emission Calculations
CAM Applicability
East Jordan Foundry, LLC
Elmira, Michigan

Maximum Yearly Capacity
Tons/Year

Maximum Hourly Capacity
Tons/Hour

Flow Diagram Designation
Mold & Core Room Chemicals
East Jordan Foundry, LLC
VOC & HAP Emission Estimates from Mold & Core Room chemicals

	Material/TAC	CAS Number	Maximum Usage lbs/hr	Maximum Usage lbs/yr	VOC/TAC Content (% by wt)	VOC Control Efficiency (% Reduction)	Factor Basis	Emissions lb/hr	Emissions tons/yr
	Core Wash - Low VOC		5	25000	1%	0%	Material Balance	0.05	0.13
	VELVAPLASTTM TGW 053 COATING								
Note 1	Methanol	67-56-1			0.01%	0%	Material Balance	0.001	0.001
Note 1	Diethylene Glycol	111-46-6			0.01%	0%	Material Balance	0.001	0.001
Note 2	Hydrotreated light silicon	64742-47-8			1.00%	0%	Material Balance	0.05	0.13
	VELVALITE GA 2								
	No TACs emitted								
	Core Wash - Alcohol Based								
	VELVALITETM ZGA 065 Coating		5	20000	25%	70%	Material Balance	0.38	0.75
Note 2	Isopropyl Alcohol	67-63-0			25%	70%	Material Balance	0.38	0.75
	IPA Thinning Solvent		2.5	11000	100%	70%	Material Balance	0.75	1.65
Note 2	Isopropyl Alcohol	67-63-0			100%	70%	Material Balance	0.75	1.65
	Core Release - Shell Core								
	Nix Stix HCLVOC		0.1	150	50%	0%	Material Balance	0.05	0.04
Note 2	Acetaldehyde	75-07-0			0.1%	0%		0.0001	0.0001
	Core Release - No Bake								
	Zip Slip 125H		0.1	150	0.79%	0%	Material Balance	0.001	0.001
Note 2	High molecular wt. silicon	63148-62-9			100%	0%		0.10	0.08
							TOTAL	**1.23**	**2.56**

Note 1: Per ASK email, the maximum concentration of either TAC is less than 0.01%. Added 07/2019.
Note 2: Maximum SDS % by weight per SDS. Added 09/2019.

PROPOSED OPERATING SCHEDULE

24 HRS/DAY
6,000 HRS/YEAR

Uncontrolled Emission Calculations
CAM Applicability
East Jordan Foundry, LLC
Elmira, Michigan

Maximum Yearly Capacity
64,620 Gal/Year Note 1

Flow Diagram Designation
Asphaltic Dip Coating

Maximum Hourly Capacity
17.23 Gal/Hour Note 1

Process Description:
East Jordan Foundry, LLC
Asphaltic Dip Coating
Control Device: None
SCC Code:
Control Device Outlet: gr/dscf
Airflow: acfm
Stack Gas Temperature: °F

Facility Process Name:	**Criteria Pollutants**								
Asphaltic Dip Coating									
Emission Factor Basis:	**PM**	**PM10**	**PM2.5**	**SOx**	**NOx**	**VOC**	**CO**	**Lead**	**CO_2e**
Emission Factors: lb/gal						0.47			
(source)						Note 2			
Capture Efficiency									
Control Efficiency									
Building Capt. Eff									
Maximum Stack Emission Rate:									
Hourly (lb/hr)									
Annual (TPY)									
Maximum Fugitive Emission Rate:									
Hourly (lb/hr)						8.099			
Annual (TPY)						**15.186**			
Total Emission Rate:									
Hourly (lb/hr)						8.099			
Annual (TPY)						**15.186**			

PROPOSED OPERATING SCHEDULE
22 HRS/DAY
6,000 HRS/YEAR

Note 1: Throughput rate based on 1.077 gal coating per ton melted at maximum melting rate and assuming coating is applied to 50% of total melted thoughput
Note 2: Vulcan MC4 VOC content from EPA Method 24 analysis, no HAPs exist in this substance

EXAMPLE CALCULATIONS:
Maximum Fugitive Emission Rate (lb/hr) = (Maximum Hourly Production gal/hr) x (VOC content lb/gal)
Maximum Annual Fugitive Emissions (ton/yr)= (Maximum Annual Production gal/yr) x (VOC content lb/gal) / (2000 lb/ton)

Uncontrolled Emission Calculations
CAM Applicability
East Jordan Foundry, LLC
Elmira, Michigan

Flow Diagram Designation
Asphaltic Dip Tank Post Heater

Process Description:
Asphaltic Dip Tank Post Heater
Control Device: None

Natural Gas Combustion

Inputs

3.64	= Max. Hourly Heat Input Rate (MMBtu/hr)
1020	= MMBtu/MMscf
3568.6	= Max. Hourly Fuel Usage Rate (standard cubic feet hour)
6000	= Maximum Operation (hours/year)
21.41176	= Maximum Annual Fuel Usage (MMscf)

POLLUTANT	CAS #	Note 1 Emission Factor ($lb/10^6$ scf)	Maximum Emissions (lbs/hr)	(tpy)
PM/PM10/PM2.5	n/a	7.6	0.03	8.14E-02
NOx	n/a	100.0	0.36	1.07E+00
CO	n/a	84.0	0.30	8.99E-01
Lead	n/a	0.0005	1.78E-06	5.35E-06
SO2	n/a	0.6	0.002	6.42E-03
VOC	n/a	5.5	0.02	5.89E-02
CO_2e	n/a	120,000	428.24	1.28E+03
Arsenic (As)	7440-38-2	2.00E-04	7.14E-07	2.14E-06
Beryllium (Be)	7440-41-7	1.20E-05	4.28E-08	1.28E-07
Cadmium (Cd)	7440-43-9	1.10E-03	3.93E-06	1.18E-05
Chromium (Cr)	7440-47-3	1.40E-03	5.00E-06	1.50E-05
Cobalt (Co)	7440-48-4	8.40E-05	3.00E-07	8.99E-07
Manganese (Mn)	7439-96-5	3.80E-04	1.36E-06	4.07E-06
Mercury (Hg)	7439-97-6	2.60E-04	9.28E-07	2.78E-06
Nickel (Ni)	7440-02-0	2.10E-03	7.49E-06	2.25E-05
Selenium (Se)	7782-49-2	2.40E-05	8.56E-08	2.57E-07
POM/2-Methylnaphthalene	91-57-6	2.40E-05	8.56E-08	2.57E-07
POM/3-Methylchloranthrene	56-49-5	1.80E-06	6.42E-09	1.93E-08
POM/7,12-Dimethylbenz(a)anthracene	57-97-6	1.60E-05	5.71E-08	1.71E-07
POM/Acenaphthene	83-32-9	1.80E-06	6.42E-09	1.93E-08
POM/Acenaphthylene	203-96-8	1.80E-06	6.42E-09	1.93E-08
POM/Anthracene	120-12-7	2.40E-06	8.56E-09	2.57E-08
POM/Benz(a)anthracene	56-55-3	1.80E-06	6.42E-09	1.93E-08
Benzene	71-43-2	2.10E-03	7.49E-06	2.25E-05
POM/Benzo(a)pyrene	50-32-8	1.20E-06	4.28E-09	1.28E-08
POM/Benzo(b)fluoranthene	205-99-2	1.20E-06	4.28E-09	1.28E-08
POM/Benzo(g,h,i)perylene	191-24-2	1.20E-06	4.28E-09	1.28E-08
POM/Benzo(k)fluoranthene	205-82-3	1.80E-06	6.42E-09	1.93E-08
POM/Chrysene	218-01-9	1.80E-06	6.42E-09	1.93E-08
POM/Dibenzo(a,h)anthracene	53-70-3	1.20E-06	4.28E-09	1.28E-08
Dichlorobenzene	25321-22-6	1.20E-03	4.28E-06	1.28E-05
POM/Fluoranthene	206-44-0	3.00E-06	1.07E-08	3.21E-08
POM/Fluorene	86-73-7	2.80E-06	9.99E-09	3.00E-08
Formaldehyde	50-00-0	7.50E-02	2.68E-04	8.03E-04
Hexane	110-54-3	1.80E+00	6.42E-03	1.93E-02
POM/Indeno(1,2,3-cd)pyrene	193-39-5	1.80E-06	6.42E-09	1.93E-08
Naphthalene	91-20-3	6.10E-04	2.18E-06	6.53E-06
POM/Phenanathrene	85-01-8	1.70E-05	6.07E-08	1.82E-07
POM/Pyrene	129-00-0	5.00E-06	1.78E-08	5.35E-08
Toluene	108-88-3	3.40E-03	1.21E-05	3.64E-05
Total POM			3.13E-07	9.38E-07
Total HAPs			6.74E-03	2.02E-02

Note 1: FROM AP-42 Fifth Edition, Supplement D, TABLE 1.4-2&3&4. 7/98 External Combustion Sources 1.4-9. Many emission factors < than specific value. In this case, specific value used to error on conservative side

EXAMPLE CALCULATIONS:
Maximum Hourly Emission = Max.hourly Fuel Usage rate (standard cubic feet hour) x (Pollutant E.F.)
Maximum Yearly Emission = Max.Hourly Emission Rate (lb/hr) x (Maximum Hours of Operation)

Uncontrolled Emission Calculations
CAM Applicability
East Jordan Foundry, LLC
Elmira, Michigan

Flow Diagram Designation
MUA-1

Process Description:
MUA-1
Control Device: None

Natural Gas Combustion

Inputs

7.30296	= Max. Hourly Heat Input Rate (MMBtu/hr)
1020	= MMBtu/MMscf
7159.8	= Max. Hourly Fuel Usage Rate (standard cubic feet hour)
4000	= Maximum Operation (hours/year)
28.63906	= Maximum Annual Fuel Usage (MMscf)

POLLUTANT	CAS #	Note 1 Emission Factor ($lb/10^6$ scf)	Maximum Emissions (lbs/hr)	(tpy)
PM/PM10/PM2.5	n/a	7.6	0.05	1.09E-01
NOx	n/a	100.0	0.72	1.43E+00
CO	n/a	84.0	0.60	1.20E+00
Lead	n/a	0.0005	3.58E-06	7.16E-06
SO2	n/a	0.6	0.004	8.59E-03
VOC	n/a	5.5	0.04	7.88E-02
CO_2e	n/a	120,000	859.17	1.72E+03
Arsenic (As)	7440-38-2	2.00E-04	1.43E-06	2.86E-06
Beryllium (Be)	7440-41-7	1.20E-05	8.59E-08	1.72E-07
Cadmium (Cd)	7440-43-9	1.10E-03	7.88E-06	1.58E-05
Chromium (Cr)	7440-47-3	1.40E-03	1.00E-05	2.00E-05
Cobalt (Co)	7440-48-4	8.40E-05	6.01E-07	1.20E-06
Manganese (Mn)	7439-96-5	3.80E-04	2.72E-06	5.44E-06
Mercury (Hg)	7439-97-6	2.60E-04	1.86E-06	3.72E-06
Nickel (Ni)	7440-02-0	2.10E-03	1.50E-05	3.01E-05
Selenium (Se)	7782-49-2	2.40E-05	1.72E-07	3.44E-07
POM/2-Methylnaphthalene	91-57-6	2.40E-05	1.72E-07	3.44E-07
POM/3-Methylchloranthrene	56-49-5	1.80E-06	1.29E-08	2.58E-08
POM/7,12-Dimethylbenz(a)anthracene	57-97-6	1.60E-05	1.15E-07	2.29E-07
POM/Acenaphthene	83-32-9	1.80E-06	1.29E-08	2.58E-08
POM/Acenaphthylene	203-96-8	1.80E-06	1.29E-08	2.58E-08
POM/Anthracene	120-12-7	2.40E-06	1.72E-08	3.44E-08
POM/Benz(a)anthracene	56-55-3	1.80E-06	1.29E-08	2.58E-08
Benzene	71-43-2	2.10E-03	1.50E-05	3.01E-05
POM/Benzo(a)pyrene	50-32-8	1.20E-06	8.59E-09	1.72E-08
POM/Benzo(b)fluoranthene	205-99-2	1.20E-06	8.59E-09	1.72E-08
POM/Benzo(g,h,i)perylene	191-24-2	1.20E-06	8.59E-09	1.72E-08
POM/Benzo(k)fluoranthene	205-82-3	1.80E-06	1.29E-08	2.58E-08
POM/Chrysene	218-01-9	1.80E-06	1.29E-08	2.58E-08
POM/Dibenzo(a,h)anthracene	53-70-3	1.20E-06	8.59E-09	1.72E-08
Dichlorobenzene	25321-22-6	1.20E-03	8.59E-06	1.72E-05
POM/Fluoranthene	206-44-0	3.00E-06	2.15E-08	4.30E-08
POM/Fluorene	86-73-7	2.80E-06	2.00E-08	4.01E-08
Formaldehyde	50-00-0	7.50E-02	5.37E-04	1.07E-03
Hexane	110-54-3	1.80E+00	1.29E-02	2.58E-02
POM/Indeno(1,2,3-cd)pyrene	193-39-5	1.80E-06	1.29E-08	2.58E-08
Naphthalene	91-20-3	6.10E-04	4.37E-06	8.73E-06
POM/Phenanathrene	85-01-8	1.70E-05	1.22E-07	2.43E-07
POM/Pyrene	129-00-0	5.00E-06	3.58E-08	7.16E-08
Toluene	108-88-3	3.40E-03	2.43E-05	4.87E-05
Total POM			6.27E-07	1.25E-06
Total HAPs			1.35E-02	2.70E-02

Note 1: FROM AP-42 Fifth Edition, Supplement D, TABLE 1.4-2&3&4. 7/98 External Combustion Sources 1.4-9. Many emission factors < than specific value. In this case, specific value used to error on conservative side

EXAMPLE CALCULATIONS:
Maximum Hourly Emission = Max.hourly Fuel Usage rate (standard cubic feet hour) x (Pollutant E.F.)
Maximum Yearly Emission = Max.Hourly Emission Rate (lb/hr) x (Maximum Hours of Operation)

Uncontrolled Emission Calculations
CAM Applicability
East Jordan Foundry, LLC
Elmira, Michigan

Flow Diagram Designation
MUA-2

Process Description:
MUA-2
Control Device: None

Natural Gas Combustion

Inputs	
7.30296	= Max. Hourly Heat Input Rate (MMBtu/hr)
1020	= MMBtu/MMscf
7159.8	= Max. Hourly Fuel Usage Rate (standard cubic feet hour)
4000	= Maximum Operation (hours/year)
28.63906	= Maximum Annual Fuel Usage (MMscf)

POLLUTANT	CAS #	Note 1 Emission Factor ($lb/10^6$ scf)	Maximum Emissions (lbs/hr)	(tpy)
PM/PM10/PM2.5	n/a	7.6	0.05	1.09E-01
NOx	n/a	100.0	0.72	1.43E+00
CO	n/a	84.0	0.60	1.20E+00
Lead	n/a	0.0005	3.58E-06	7.16E-06
SO2	n/a	0.6	0.004	8.59E-03
VOC	n/a	5.5	0.04	7.88E-02
CO_2e	n/a	120,000	859.17	1.72E+03
Arsenic (As)	7440-38-2	2.00E-04	1.43E-06	2.86E-06
Beryllium (Be)	7440-41-7	1.20E-05	8.59E-08	1.72E-07
Cadmium (Cd)	7440-43-9	1.10E-03	7.88E-06	1.58E-05
Chromium (Cr)	7440-47-3	1.40E-03	1.00E-05	2.00E-05
Cobalt (Co)	7440-48-4	8.40E-05	6.01E-07	1.20E-06
Manganese (Mn)	7439-96-5	3.80E-04	2.72E-06	5.44E-06
Mercury (Hg)	7439-97-6	2.60E-04	1.86E-06	3.72E-06
Nickel (Ni)	7440-02-0	2.10E-03	1.50E-05	3.01E-05
Selenium (Se)	7782-49-2	2.40E-05	1.72E-07	3.44E-07
POM/2-Methylnaphthalene	91-57-6	2.40E-05	1.72E-07	3.44E-07
POM/3-Methylchloranthrene	56-49-5	1.80E-06	1.29E-08	2.58E-08
POM/7,12-Dimethylbenz(a)anthracene	57-97-6	1.60E-05	1.15E-07	2.29E-07
POM/Acenaphthene	83-32-9	1.80E-06	1.29E-08	2.58E-08
POM/Acenaphthylene	203-96-8	1.80E-06	1.29E-08	2.58E-08
POM/Anthracene	120-12-7	2.40E-06	1.72E-08	3.44E-08
POM/Benz(a)anthracene	56-55-3	1.80E-06	1.29E-08	2.58E-08
Benzene	71-43-2	2.10E-03	1.50E-05	3.01E-05
POM/Benzo(a)pyrene	50-32-8	1.20E-06	8.59E-09	1.72E-08
POM/Benzo(b)fluoranthene	205-99-2	1.20E-06	8.59E-09	1.72E-08
POM/Benzo(g,h,i)perylene	191-24-2	1.20E-06	8.59E-09	1.72E-08
POM/Benzo(k)fluoranthene	205-82-3	1.80E-06	1.29E-08	2.58E-08
POM/Chrysene	218-01-9	1.80E-06	1.29E-08	2.58E-08
POM/Dibenzo(a,h)anthracene	53-70-3	1.20E-06	8.59E-09	1.72E-08
Dichlorobenzene	25321-22-6	1.20E-03	8.59E-06	1.72E-05
POM/Fluoranthene	206-44-0	3.00E-06	2.15E-08	4.30E-08
POM/Fluorene	86-73-7	2.80E-06	2.00E-08	4.01E-08
Formaldehyde	50-00-0	7.50E-02	5.37E-04	1.07E-03
Hexane	110-54-3	1.80E+00	1.29E-02	2.58E-02
POM/Indeno(1,2,3-cd)pyrene	193-39-5	1.80E-06	1.29E-08	2.58E-08
Naphthalene	91-20-3	6.10E-04	4.37E-06	8.73E-06
POM/Phenanathrene	85-01-8	1.70E-05	1.22E-07	2.43E-07
POM/Pyrene	129-00-0	5.00E-06	3.58E-08	7.16E-08
Toluene	108-88-3	3.40E-03	2.43E-05	4.87E-05
Total POM			6.27E-07	1.25E-06
Total HAPs			1.35E-02	2.70E-02

Note 1: FROM AP-42 Fifth Edition, Supplement D, TABLE 1.4-2&3&4. 7/98 External Combustion Sources 1.4-9. Many emission factors < than specific value. In this case, specific value used to error on conservative side

EXAMPLE CALCULATIONS:
Maximum Hourly Emission = Max.hourly Fuel Usage rate (standard cubic feet hour) x (Pollutant E.F.)
Maximum Yearly Emission = Max.Hourly Emission Rate (lb/hr) x (Maximum Hours of Operation)

Flow Diagram Designation
MUA-3

Process Description:
MUA-3
Control Device: None

Natural Gas Combustion

Inputs

7.30296	= Max. Hourly Heat Input Rate (MMBtu/hr)
1020	= MMBtu/MMscf
7159.8	= Max. Hourly Fuel Usage Rate (standard cubic feet hour)
4000	= Maximum Operation (hours/year)
28.63906	= Maximum Annual Fuel Usage (MMscf)

POLLUTANT	CAS #	Note 1 Emission Factor ($lb/10^6$ scf)	Maximum Emissions (lbs/hr)	(tpy)
PM/PM10/PM2.5	n/a	7.6	0.05	1.09E-01
NOx	n/a	100.0	0.72	1.43E+00
CO	n/a	84.0	0.60	1.20E+00
Lead	n/a	0.0005	3.58E-06	7.16E-06
SO2	n/a	0.6	0.004	8.59E-03
VOC	n/a	5.5	0.04	7.88E-02
CO_2e	n/a	120,000	859.17	1.72E+03
Arsenic (As)	7440-38-2	2.00E-04	1.43E-06	2.86E-06
Beryllium (Be)	7440-41-7	1.20E-05	8.59E-08	1.72E-07
Cadmium (Cd)	7440-43-9	1.10E-03	7.88E-06	1.58E-05
Chromium (Cr)	7440-47-3	1.40E-03	1.00E-05	2.00E-05
Cobalt (Co)	7440-48-4	8.40E-05	6.01E-07	1.20E-06
Manganese (Mn)	7439-96-5	3.80E-04	2.72E-06	5.44E-06
Mercury (Hg)	7439-97-6	2.60E-04	1.86E-06	3.72E-06
Nickel (Ni)	7440-02-0	2.10E-03	1.50E-05	3.01E-05
Selenium (Se)	7782-49-2	2.40E-05	1.72E-07	3.44E-07
POM/2-Methylnaphthalene	91-57-6	2.40E-05	1.72E-07	3.44E-07
POM/3-Methylchloranthrene	56-49-5	1.80E-06	1.29E-08	2.58E-08
POM/7,12-Dimethylbenz(a)anthracene	57-97-6	1.60E-05	1.15E-07	2.29E-07
POM/Acenaphthene	83-32-9	1.80E-06	1.29E-08	2.58E-08
POM/Acenaphthylene	203-96-8	1.80E-06	1.29E-08	2.58E-08
POM/Anthracene	120-12-7	2.40E-06	1.72E-08	3.44E-08
POM/Benz(a)anthracene	56-55-3	1.80E-06	1.29E-08	2.58E-08
Benzene	71-43-2	2.10E-03	1.50E-05	3.01E-05
POM/Benzo(a)pyrene	50-32-8	1.20E-06	8.59E-09	1.72E-08
POM/Benzo(b)fluoranthene	205-99-2	1.20E-06	8.59E-09	1.72E-08
POM/Benzo(g,h,i)perylene	191-24-2	1.20E-06	8.59E-09	1.72E-08
POM/Benzo(k)fluoranthene	205-82-3	1.80E-06	1.29E-08	2.58E-08
POM/Chrysene	218-01-9	1.80E-06	1.29E-08	2.58E-08
POM/Dibenzo(a,h)anthracene	53-70-3	1.20E-06	8.59E-09	1.72E-08
Dichlorobenzene	25321-22-6	1.20E-03	8.59E-06	1.72E-05
POM/Fluoranthene	206-44-0	3.00E-06	2.15E-08	4.30E-08
POM/Fluorene	86-73-7	2.80E-06	2.00E-08	4.01E-08
Formaldehyde	50-00-0	7.50E-02	5.37E-04	1.07E-03
Hexane	110-54-3	1.80E+00	1.29E-02	2.58E-02
POM/Indeno(1,2,3-cd)pyrene	193-39-5	1.80E-06	1.29E-08	2.58E-08
Naphthalene	91-20-3	6.10E-04	4.37E-06	8.73E-06
POM/Phenanathrene	85-01-8	1.70E-05	1.22E-07	2.43E-07
POM/Pyrene	129-00-0	5.00E-06	3.58E-08	7.16E-08
Toluene	108-88-3	3.40E-03	2.43E-05	4.87E-05
Total POM			6.27E-07	1.25E-06
Total HAPs			1.35E-02	2.70E-02

Note 1: FROM AP-42 Fifth Edition, Supplement D, TABLE 1.4-2&3&4. 7/98 External Combustion Sources 1.4-9. Many emission factors < than specific value. In this case, specific value used to error on conservative side

EXAMPLE CALCULATIONS:
Maximum Hourly Emission = Max.hourly Fuel Usage rate (standard cubic feet hour) x (Pollutant E.F.)
Maximum Yearly Emission = Max.Hourly Emission Rate (lb/hr) x (Maximum Hours of Operation)

Uncontrolled Emission Calculations
CAM Applicability
East Jordan Foundry, LLC
Elmira, Michigan

Flow Diagram Designation
MUA-4

Process Description:
MUA-4
Control Device: None

Natural Gas Combustion

Inputs

7.30296	= Max. Hourly Heat Input Rate (MMBtu/hr)
1020	= MMBtu/MMscf
7159.8	= Max. Hourly Fuel Usage Rate (standard cubic feet hour)
4000	= Maximum Operation (hours/year)
28.63906	= Maximum Annual Fuel Usage (MMscf)

POLLUTANT	CAS #	Note 1 Emission Factor ($lb/10^6$ scf)	Maximum Emissions (lbs/hr)	(tpy)
PM/PM10/PM2.5	n/a	7.6	0.05	1.09E-01
NOx	n/a	100.0	0.72	1.43E+00
CO	n/a	84.0	0.60	1.20E+00
Lead	n/a	0.0005	3.58E-06	7.16E-06
SO2	n/a	0.6	0.004	8.59E-03
VOC	n/a	5.5	0.04	7.88E-02
CO_2e	n/a	120,000	859.17	1.72E+03
Arsenic (As)	7440-38-2	2.00E-04	1.43E-06	2.86E-06
Beryllium (Be)	7440-41-7	1.20E-05	8.59E-08	1.72E-07
Cadmium (Cd)	7440-43-9	1.10E-03	7.88E-06	1.58E-05
Chromium (Cr)	7440-47-3	1.40E-03	1.00E-05	2.00E-05
Cobalt (Co)	7440-48-4	8.40E-05	6.01E-07	1.20E-06
Manganese (Mn)	7439-96-5	3.80E-04	2.72E-06	5.44E-06
Mercury (Hg)	7439-97-6	2.60E-04	1.86E-06	3.72E-06
Nickel (Ni)	7440-02-0	2.10E-03	1.50E-05	3.01E-05
Selenium (Se)	7782-49-2	2.40E-05	1.72E-07	3.44E-07
POM/2-Methylnaphthalene	91-57-6	2.40E-05	1.72E-07	3.44E-07
POM/3-Methylchloranthrene	56-49-5	1.80E-06	1.29E-08	2.58E-08
POM/7,12-Dimethylbenz(a)anthracene	57-97-6	1.60E-05	1.15E-07	2.29E-07
POM/Acenaphthene	83-32-9	1.80E-06	1.29E-08	2.58E-08
POM/Acenaphthylene	203-96-8	1.80E-06	1.29E-08	2.58E-08
POM/Anthracene	120-12-7	2.40E-06	1.72E-08	3.44E-08
POM/Benz(a)anthracene	56-55-3	1.80E-06	1.29E-08	2.58E-08
Benzene	71-43-2	2.10E-03	1.50E-05	3.01E-05
POM/Benzo(a)pyrene	50-32-8	1.20E-06	8.59E-09	1.72E-08
POM/Benzo(b)fluoranthene	205-99-2	1.20E-06	8.59E-09	1.72E-08
POM/Benzo(g,h,i)perylene	191-24-2	1.20E-06	8.59E-09	1.72E-08
POM/Benzo(k)fluoranthene	205-82-3	1.80E-06	1.29E-08	2.58E-08
POM/Chrysene	218-01-9	1.80E-06	1.29E-08	2.58E-08
POM/Dibenzo(a,h)anthracene	53-70-3	1.20E-06	8.59E-09	1.72E-08
Dichlorobenzene	25321-22-6	1.20E-03	8.59E-06	1.72E-05
POM/Fluoranthene	206-44-0	3.00E-06	2.15E-08	4.30E-08
POM/Fluorene	86-73-7	2.80E-06	2.00E-08	4.01E-08
Formaldehyde	50-00-0	7.50E-02	5.37E-04	1.07E-03
Hexane	110-54-3	1.80E+00	1.29E-02	2.58E-02
POM/Indeno(1,2,3-cd)pyrene	193-39-5	1.80E-06	1.29E-08	2.58E-08
Naphthalene	91-20-3	6.10E-04	4.37E-06	8.73E-06
POM/Phenanathrene	85-01-8	1.70E-05	1.22E-07	2.43E-07
POM/Pyrene	129-00-0	5.00E-06	3.58E-08	7.16E-08
Toluene	108-88-3	3.40E-03	2.43E-05	4.87E-05
Total POM			6.27E-07	1.25E-06
Total HAPs			1.35E-02	2.70E-02

Note 1: FROM AP-42 Fifth Edition, Supplement D, TABLE 1.4-2&3&4. 7/98 External Combustion Sources 1.4-9. Many emission factors < than specific value. In this case, specific value used to error on conservative side

EXAMPLE CALCULATIONS:
Maximum Hourly Emission = Max.hourly Fuel Usage rate (standard cubic feet hour) x (Pollutant E.F.)
Maximum Yearly Emission = Max.Hourly Emission Rate (lb/hr) x (Maximum Hours of Operation)

Flow Diagram Designation
MUA-5

Process Description:
MUA-5
Control Device: None

Natural Gas Combustion

Inputs

7.30296	= Max. Hourly Heat Input Rate (MMBtu/hr)
1020	= MMBtu/MMscf
7159.8	= Max. Hourly Fuel Usage Rate (standard cubic feet hour)
4000	= Maximum Operation (hours/year)
28.63906	= Maximum Annual Fuel Usage (MMscf)

POLLUTANT	CAS #	Note 1 Emission Factor ($lb/10^6$ scf)	Maximum Emissions (lbs/hr)	(tpy)
PM/PM10/PM2.5	n/a	7.6	0.05	1.09E-01
NOx	n/a	100.0	0.72	1.43E+00
CO	n/a	84.0	0.60	1.20E+00
Lead	n/a	0.0005	3.58E-06	7.16E-06
SO2	n/a	0.6	0.004	8.59E-03
VOC	n/a	5.5	0.04	7.88E-02
CO_2e	n/a	120,000	859.17	1.72E+03
Arsenic (As)	7440-38-2	2.00E-04	1.43E-06	2.86E-06
Beryllium (Be)	7440-41-7	1.20E-05	8.59E-08	1.72E-07
Cadmium (Cd)	7440-43-9	1.10E-03	7.88E-06	1.58E-05
Chromium (Cr)	7440-47-3	1.40E-03	1.00E-05	2.00E-05
Cobalt (Co)	7440-48-4	8.40E-05	6.01E-07	1.20E-06
Manganese (Mn)	7439-96-5	3.80E-04	2.72E-06	5.44E-06
Mercury (Hg)	7439-97-6	2.60E-04	1.86E-06	3.72E-06
Nickel (Ni)	7440-02-0	2.10E-03	1.50E-05	3.01E-05
Selenium (Se)	7782-49-2	2.40E-05	1.72E-07	3.44E-07
POM/2-Methylnaphthalene	91-57-6	2.40E-05	1.72E-07	3.44E-07
POM/3-Methylchloranthrene	56-49-5	1.80E-06	1.29E-08	2.58E-08
POM/7,12-Dimethylbenz(a)anthracene	57-97-6	1.60E-05	1.15E-07	2.29E-07
POM/Acenaphthene	83-32-9	1.80E-06	1.29E-08	2.58E-08
POM/Acenaphthylene	203-96-8	1.80E-06	1.29E-08	2.58E-08
POM/Anthracene	120-12-7	2.40E-06	1.72E-08	3.44E-08
POM/Benz(a)anthracene	56-55-3	1.80E-06	1.29E-08	2.58E-08
Benzene	71-43-2	2.10E-03	1.50E-05	3.01E-05
POM/Benzo(a)pyrene	50-32-8	1.20E-06	8.59E-09	1.72E-08
POM/Benzo(b)fluoranthene	205-99-2	1.20E-06	8.59E-09	1.72E-08
POM/Benzo(g,h,i)perylene	191-24-2	1.20E-06	8.59E-09	1.72E-08
POM/Benzo(k)fluoranthene	205-82-3	1.80E-06	1.29E-08	2.58E-08
POM/Chrysene	218-01-9	1.80E-06	1.29E-08	2.58E-08
POM/Dibenzo(a,h)anthracene	53-70-3	1.20E-06	8.59E-09	1.72E-08
Dichlorobenzene	25321-22-6	1.20E-03	8.59E-06	1.72E-05
POM/Fluoranthene	206-44-0	3.00E-06	2.15E-08	4.30E-08
POM/Fluorene	86-73-7	2.80E-06	2.00E-08	4.01E-08
Formaldehyde	50-00-0	7.50E-02	5.37E-04	1.07E-03
Hexane	110-54-3	1.80E+00	1.29E-02	2.58E-02
POM/Indeno(1,2,3-cd)pyrene	193-39-5	1.80E-06	1.29E-08	2.58E-08
Naphthalene	91-20-3	6.10E-04	4.37E-06	8.73E-06
POM/Phenanathrene	85-01-8	1.70E-05	1.22E-07	2.43E-07
POM/Pyrene	129-00-0	5.00E-06	3.58E-08	7.16E-08
Toluene	108-88-3	3.40E-03	2.43E-05	4.87E-05
Total POM			6.27E-07	1.25E-06
Total HAPs			1.35E-02	2.70E-02

Note 1: FROM AP-42 Fifth Edition, Supplement D, TABLE 1.4-2&3&4. 7/98 External Combustion Sources 1.4-9. Many emission factors < than specific value. In this case, specific value used to error on conservative side

EXAMPLE CALCULATIONS:
Maximum Hourly Emission = Max.hourly Fuel Usage rate (standard cubic feet hour) x (Pollutant E.F.)
Maximum Yearly Emission = Max.Hourly Emission Rate (lb/hr) x (Maximum Hours of Operation)

Flow Diagram Designation
MUA-6

Process Description:
MUA-6
Control Device: None

Natural Gas Combustion

Inputs

7.30296	= Max. Hourly Heat Input Rate (MMBtu/hr)
1020	= MMBtu/MMscf
7159.8	= Max. Hourly Fuel Usage Rate (standard cubic feet hour)
4000	= Maximum Operation (hours/year)
28.63906	= Maximum Annual Fuel Usage (MMscf)

POLLUTANT	CAS #	Note 1 Emission Factor ($lb/10^6$ scf)	Maximum Emissions (lbs/hr)	(tpy)
PM/PM10/PM2.5	n/a	7.6	0.05	1.09E-01
NOx	n/a	100.0	0.72	1.43E+00
CO	n/a	84.0	0.60	1.20E+00
Lead	n/a	0.0005	3.58E-06	7.16E-06
SO2	n/a	0.6	0.004	8.59E-03
VOC	n/a	5.5	0.04	7.88E-02
CO_2e	n/a	120,000	859.17	1.72E+03
Arsenic (As)	7440-38-2	2.00E-04	1.43E-06	2.86E-06
Beryllium (Be)	7440-41-7	1.20E-05	8.59E-08	1.72E-07
Cadmium (Cd)	7440-43-9	1.10E-03	7.88E-06	1.58E-05
Chromium (Cr)	7440-47-3	1.40E-03	1.00E-05	2.00E-05
Cobalt (Co)	7440-48-4	8.40E-05	6.01E-07	1.20E-06
Manganese (Mn)	7439-96-5	3.80E-04	2.72E-06	5.44E-06
Mercury (Hg)	7439-97-6	2.60E-04	1.86E-06	3.72E-06
Nickel (Ni)	7440-02-0	2.10E-03	1.50E-05	3.01E-05
Selenium (Se)	7782-49-2	2.40E-05	1.72E-07	3.44E-07
POM/2-Methylnaphthalene	91-57-6	2.40E-05	1.72E-07	3.44E-07
POM/3-Methylchloranthrene	56-49-5	1.80E-06	1.29E-08	2.58E-08
POM/7,12-Dimethylbenz(a)anthracene	57-97-6	1.60E-05	1.15E-07	2.29E-07
POM/Acenaphthene	83-32-9	1.80E-06	1.29E-08	2.58E-08
POM/Acenaphthylene	203-96-8	1.80E-06	1.29E-08	2.58E-08
POM/Anthracene	120-12-7	2.40E-06	1.72E-08	3.44E-08
POM/Benz(a)anthracene	56-55-3	1.80E-06	1.29E-08	2.58E-08
Benzene	71-43-2	2.10E-03	1.50E-05	3.01E-05
POM/Benzo(a)pyrene	50-32-8	1.20E-06	8.59E-09	1.72E-08
POM/Benzo(b)fluoranthene	205-99-2	1.20E-06	8.59E-09	1.72E-08
POM/Benzo(g,h,i)perylene	191-24-2	1.20E-06	8.59E-09	1.72E-08
POM/Benzo(k)fluoranthene	205-82-3	1.80E-06	1.29E-08	2.58E-08
POM/Chrysene	218-01-9	1.80E-06	1.29E-08	2.58E-08
POM/Dibenzo(a,h)anthracene	53-70-3	1.20E-06	8.59E-09	1.72E-08
Dichlorobenzene	25321-22-6	1.20E-03	8.59E-06	1.72E-05
POM/Fluoranthene	206-44-0	3.00E-06	2.15E-08	4.30E-08
POM/Fluorene	86-73-7	2.80E-06	2.00E-08	4.01E-08
Formaldehyde	50-00-0	7.50E-02	5.37E-04	1.07E-03
Hexane	110-54-3	1.80E+00	1.29E-02	2.58E-02
POM/Indeno(1,2,3-cd)pyrene	193-39-5	1.80E-06	1.29E-08	2.58E-08
Naphthalene	91-20-3	6.10E-04	4.37E-06	8.73E-06
POM/Phenanathrene	85-01-8	1.70E-05	1.22E-07	2.43E-07
POM/Pyrene	129-00-0	5.00E-06	3.58E-08	7.16E-08
Toluene	108-88-3	3.40E-03	2.43E-05	4.87E-05
Total POM			6.27E-07	1.25E-06
Total HAPs			1.35E-02	2.70E-02

Note 1: FROM AP-42 Fifth Edition, Supplement D, TABLE 1.4-2&3&4. 7/98 External Combustion Sources 1.4-9. Many emission factors < than specific value. In this case, specific value used to error on conservative side

EXAMPLE CALCULATIONS:
Maximum Hourly Emission = Max.hourly Fuel Usage rate (standard cubic feet hour) x (Pollutant E.F.)
Maximum Yearly Emission = Max.Hourly Emission Rate (lb/hr) x (Maximum Hours of Operation)

Flow Diagram Designation
MUA-7

Process Description:
MUA-7
Control Device: None

Natural Gas Combustion

Inputs

7.30296	= Max. Hourly Heat Input Rate (MMBtu/hr)
1020	= MMBtu/MMscf
7159.8	= Max. Hourly Fuel Usage Rate (standard cubic feet hour)
4000	= Maximum Operation (hours/year)
28.63906	= Maximum Annual Fuel Usage (MMscf)

POLLUTANT	CAS #	Note 1 Emission Factor ($lb/10^6$ scf)	Maximum Emissions (lbs/hr)	(tpy)
PM/PM10/PM2.5	n/a	7.6	0.05	1.09E-01
NOx	n/a	100.0	0.72	1.43E+00
CO	n/a	84.0	0.60	1.20E+00
Lead	n/a	0.0005	3.58E-06	7.16E-06
SO2	n/a	0.6	0.004	8.59E-03
VOC	n/a	5.5	0.04	7.88E-02
CO_2e	n/a	120,000	859.17	1.72E+03
Arsenic (As)	7440-38-2	2.00E-04	1.43E-06	2.86E-06
Beryllium (Be)	7440-41-7	1.20E-05	8.59E-08	1.72E-07
Cadmium (Cd)	7440-43-9	1.10E-03	7.88E-06	1.58E-05
Chromium (Cr)	7440-47-3	1.40E-03	1.00E-05	2.00E-05
Cobalt (Co)	7440-48-4	8.40E-05	6.01E-07	1.20E-06
Manganese (Mn)	7439-96-5	3.80E-04	2.72E-06	5.44E-06
Mercury (Hg)	7439-97-6	2.60E-04	1.86E-06	3.72E-06
Nickel (Ni)	7440-02-0	2.10E-03	1.50E-05	3.01E-05
Selenium (Se)	7782-49-2	2.40E-05	1.72E-07	3.44E-07
POM/2-Methylnaphthalene	91-57-6	2.40E-05	1.72E-07	3.44E-07
POM/3-Methylchloranthrene	56-49-5	1.80E-06	1.29E-08	2.58E-08
POM/7,12-Dimethylbenz(a)anthracene	57-97-6	1.60E-05	1.15E-07	2.29E-07
POM/Acenaphthene	83-32-9	1.80E-06	1.29E-08	2.58E-08
POM/Acenaphthylene	203-96-8	1.80E-06	1.29E-08	2.58E-08
POM/Anthracene	120-12-7	2.40E-06	1.72E-08	3.44E-08
POM/Benz(a)anthracene	56-55-3	1.80E-06	1.29E-08	2.58E-08
Benzene	71-43-2	2.10E-03	1.50E-05	3.01E-05
POM/Benzo(a)pyrene	50-32-8	1.20E-06	8.59E-09	1.72E-08
POM/Benzo(b)fluoranthene	205-99-2	1.20E-06	8.59E-09	1.72E-08
POM/Benzo(g,h,i)perylene	191-24-2	1.20E-06	8.59E-09	1.72E-08
POM/Benzo(k)fluoranthene	205-82-3	1.80E-06	1.29E-08	2.58E-08
POM/Chrysene	218-01-9	1.80E-06	1.29E-08	2.58E-08
POM/Dibenzo(a,h)anthracene	53-70-3	1.20E-06	8.59E-09	1.72E-08
Dichlorobenzene	25321-22-6	1.20E-03	8.59E-06	1.72E-05
POM/Fluoranthene	206-44-0	3.00E-06	2.15E-08	4.30E-08
POM/Fluorene	86-73-7	2.80E-06	2.00E-08	4.01E-08
Formaldehyde	50-00-0	7.50E-02	5.37E-04	1.07E-03
Hexane	110-54-3	1.80E+00	1.29E-02	2.58E-02
POM/Indeno(1,2,3-cd)pyrene	193-39-5	1.80E-06	1.29E-08	2.58E-08
Naphthalene	91-20-3	6.10E-04	4.37E-06	8.73E-06
POM/Phenanathrene	85-01-8	1.70E-05	1.22E-07	2.43E-07
POM/Pyrene	129-00-0	5.00E-06	3.58E-08	7.16E-08
Toluene	108-88-3	3.40E-03	2.43E-05	4.87E-05
Total POM			6.27E-07	1.25E-06
Total HAPs			1.35E-02	2.70E-02

Note 1: FROM AP-42 Fifth Edition, Supplement D, TABLE 1.4-2&3&4. 7/98 External Combustion Sources 1.4-9. Many emission factors < than specific value. In this case, specific value used to error on conservative side

EXAMPLE CALCULATIONS:
Maximum Hourly Emission = Max.hourly Fuel Usage rate (standard cubic feet hour) x (Pollutant E.F.)
Maximum Yearly Emission = Max.Hourly Emission Rate (lb/hr) x (Maximum Hours of Operation)

Flow Diagram Designation
MUA-8

Process Description:
MUA-8
Control Device: None

Natural Gas Combustion

Inputs

7.30296	= Max. Hourly Heat Input Rate (MMBtu/hr)
1020	= MMBtu/MMscf
7159.8	= Max. Hourly Fuel Usage Rate (standard cubic feet hour)
4000	= Maximum Operation (hours/year)
28.63906	= Maximum Annual Fuel Usage (MMscf)

POLLUTANT	CAS #	Note 1 Emission Factor ($lb/10^6$ scf)	Maximum Emissions (lbs/hr)	(tpy)
PM/PM10/PM2.5	n/a	7.6	0.05	1.09E-01
NOx	n/a	100.0	0.72	1.43E+00
CO	n/a	84.0	0.60	1.20E+00
Lead	n/a	0.0005	3.58E-06	7.16E-06
SO2	n/a	0.6	0.004	8.59E-03
VOC	n/a	5.5	0.04	7.88E-02
CO_2e	n/a	120,000	859.17	1.72E+03
Arsenic (As)	7440-38-2	2.00E-04	1.43E-06	2.86E-06
Beryllium (Be)	7440-41-7	1.20E-05	8.59E-08	1.72E-07
Cadmium (Cd)	7440-43-9	1.10E-03	7.88E-06	1.58E-05
Chromium (Cr)	7440-47-3	1.40E-03	1.00E-05	2.00E-05
Cobalt (Co)	7440-48-4	8.40E-05	6.01E-07	1.20E-06
Manganese (Mn)	7439-96-5	3.80E-04	2.72E-06	5.44E-06
Mercury (Hg)	7439-97-6	2.60E-04	1.86E-06	3.72E-06
Nickel (Ni)	7440-02-0	2.10E-03	1.50E-05	3.01E-05
Selenium (Se)	7782-49-2	2.40E-05	1.72E-07	3.44E-07
POM/2-Methylnaphthalene	91-57-6	2.40E-05	1.72E-07	3.44E-07
POM/3-Methylchloranthrene	56-49-5	1.80E-06	1.29E-08	2.58E-08
POM/7,12-Dimethylbenz(a)anthracene	57-97-6	1.60E-05	1.15E-07	2.29E-07
POM/Acenaphthene	83-32-9	1.80E-06	1.29E-08	2.58E-08
POM/Acenaphthylene	203-96-8	1.80E-06	1.29E-08	2.58E-08
POM/Anthracene	120-12-7	2.40E-06	1.72E-08	3.44E-08
POM/Benz(a)anthracene	56-55-3	1.80E-06	1.29E-08	2.58E-08
Benzene	71-43-2	2.10E-03	1.50E-05	3.01E-05
POM/Benzo(a)pyrene	50-32-8	1.20E-06	8.59E-09	1.72E-08
POM/Benzo(b)fluoranthene	205-99-2	1.20E-06	8.59E-09	1.72E-08
POM/Benzo(g,h,i)perylene	191-24-2	1.20E-06	8.59E-09	1.72E-08
POM/Benzo(k)fluoranthene	205-82-3	1.80E-06	1.29E-08	2.58E-08
POM/Chrysene	218-01-9	1.80E-06	1.29E-08	2.58E-08
POM/Dibenzo(a,h)anthracene	53-70-3	1.20E-06	8.59E-09	1.72E-08
Dichlorobenzene	25321-22-6	1.20E-03	8.59E-06	1.72E-05
POM/Fluoranthene	206-44-0	3.00E-06	2.15E-08	4.30E-08
POM/Fluorene	86-73-7	2.80E-06	2.00E-08	4.01E-08
Formaldehyde	50-00-0	7.50E-02	5.37E-04	1.07E-03
Hexane	110-54-3	1.80E+00	1.29E-02	2.58E-02
POM/Indeno(1,2,3-cd)pyrene	193-39-5	1.80E-06	1.29E-08	2.58E-08
Naphthalene	91-20-3	6.10E-04	4.37E-06	8.73E-06
POM/Phenanathrene	85-01-8	1.70E-05	1.22E-07	2.43E-07
POM/Pyrene	129-00-0	5.00E-06	3.58E-08	7.16E-08
Toluene	108-88-3	3.40E-03	2.43E-05	4.87E-05
Total POM			6.27E-07	1.25E-06
Total HAPs			1.35E-02	2.70E-02

Note 1: FROM AP-42 Fifth Edition, Supplement D, TABLE 1.4-2&3&4. 7/98 External Combustion Sources 1.4-9. Many emission factors < than specific value. In this case, specific value used to error on conservative side

EXAMPLE CALCULATIONS:
Maximum Hourly Emission = Max.hourly Fuel Usage rate (standard cubic feet hour) x (Pollutant E.F.)
Maximum Yearly Emission = Max.Hourly Emission Rate (lb/hr) x (Maximum Hours of Operation)

Uncontrolled Emission Calculations
CAM Applicability
East Jordan Foundry, LLC
Elmira, Michigan

Flow Diagram Designation
MUA-9

Process Description:
MUA-9
Control Device: None

Natural Gas Combustion

Inputs

7.30296	= Max. Hourly Heat Input Rate (MMBtu/hr)
1020	= MMBtu/MMscf
7159.8	= Max. Hourly Fuel Usage Rate (standard cubic feet hour)
4000	= Maximum Operation (hours/year)
28.63906	= Maximum Annual Fuel Usage (MMscf)

POLLUTANT	CAS #	Note 1 Emission Factor ($lb/10^6$ scf)	Maximum Emissions (lbs/hr)	(tpy)
PM/PM10/PM2.5	n/a	7.6	0.05	1.09E-01
NOx	n/a	100.0	0.72	1.43E+00
CO	n/a	84.0	0.60	1.20E+00
Lead	n/a	0.0005	3.58E-06	7.16E-06
SO2	n/a	0.6	0.004	8.59E-03
VOC	n/a	5.5	0.04	7.88E-02
CO_2e	n/a	120,000	859.17	1.72E+03
Arsenic (As)	7440-38-2	2.00E-04	1.43E-06	2.86E-06
Beryllium (Be)	7440-41-7	1.20E-05	8.59E-08	1.72E-07
Cadmium (Cd)	7440-43-9	1.10E-03	7.88E-06	1.58E-05
Chromium (Cr)	7440-47-3	1.40E-03	1.00E-05	2.00E-05
Cobalt (Co)	7440-48-4	8.40E-05	6.01E-07	1.20E-06
Manganese (Mn)	7439-96-5	3.80E-04	2.72E-06	5.44E-06
Mercury (Hg)	7439-97-6	2.60E-04	1.86E-06	3.72E-06
Nickel (Ni)	7440-02-0	2.10E-03	1.50E-05	3.01E-05
Selenium (Se)	7782-49-2	2.40E-05	1.72E-07	3.44E-07
POM/2-Methylnaphthalene	91-57-6	2.40E-05	1.72E-07	3.44E-07
POM/3-Methylchloranthrene	56-49-5	1.80E-06	1.29E-08	2.58E-08
POM/7,12-Dimethylbenz(a)anthracene	57-97-6	1.60E-05	1.15E-07	2.29E-07
POM/Acenaphthene	83-32-9	1.80E-06	1.29E-08	2.58E-08
POM/Acenaphthylene	203-96-8	1.80E-06	1.29E-08	2.58E-08
POM/Anthracene	120-12-7	2.40E-06	1.72E-08	3.44E-08
POM/Benz(a)anthracene	56-55-3	1.80E-06	1.29E-08	2.58E-08
Benzene	71-43-2	2.10E-03	1.50E-05	3.01E-05
POM/Benzo(a)pyrene	50-32-8	1.20E-06	8.59E-09	1.72E-08
POM/Benzo(b)fluoranthene	205-99-2	1.20E-06	8.59E-09	1.72E-08
POM/Benzo(g,h,i)perylene	191-24-2	1.20E-06	8.59E-09	1.72E-08
POM/Benzo(k)fluoranthene	205-82-3	1.80E-06	1.29E-08	2.58E-08
POM/Chrysene	218-01-9	1.80E-06	1.29E-08	2.58E-08
POM/Dibenzo(a,h)anthracene	53-70-3	1.20E-06	8.59E-09	1.72E-08
Dichlorobenzene	25321-22-6	1.20E-03	8.59E-06	1.72E-05
POM/Fluoranthene	206-44-0	3.00E-06	2.15E-08	4.30E-08
POM/Fluorene	86-73-7	2.80E-06	2.00E-08	4.01E-08
Formaldehyde	50-00-0	7.50E-02	5.37E-04	1.07E-03
Hexane	110-54-3	1.80E+00	1.29E-02	2.58E-02
POM/Indeno(1,2,3-cd)pyrene	193-39-5	1.80E-06	1.29E-08	2.58E-08
Naphthalene	91-20-3	6.10E-04	4.37E-06	8.73E-06
POM/Phenanathrene	85-01-8	1.70E-05	1.22E-07	2.43E-07
POM/Pyrene	129-00-0	5.00E-06	3.58E-08	7.16E-08
Toluene	108-88-3	3.40E-03	2.43E-05	4.87E-05
Total POM			6.27E-07	1.25E-06
Total HAPs			1.35E-02	2.70E-02

Note 1: FROM AP-42 Fifth Edition, Supplement D, TABLE 1.4-2&3&4. 7/98 External Combustion Sources 1.4-9. Many emission factors < than specific value. In this case, specific value used to error on conservative side

EXAMPLE CALCULATIONS:
Maximum Hourly Emission = Max.hourly Fuel Usage rate (standard cubic feet hour) x (Pollutant E.F.)
Maximum Yearly Emission = Max.Hourly Emission Rate (lb/hr) x (Maximum Hours of Operation)

Flow Diagram Designation
MUA-10

Process Description:
MUA-10
Control Device: None

Natural Gas Combustion

Inputs

5.47722	= Max. Hourly Heat Input Rate (MMBtu/hr)
1020	= MMBtu/MMscf
5369.8	= Max. Hourly Fuel Usage Rate (standard cubic feet hour)
4000	= Maximum Operation (hours/year)
21.47929	= Maximum Annual Fuel Usage (MMscf)

POLLUTANT	CAS #	Note 1 Emission Factor ($lb/10^6$ scf)	Maximum Emissions (lbs/hr)	(tpy)
PM/PM10/PM2.5	n/a	7.6	0.04	8.16E-02
NOx	n/a	100.0	0.54	1.07E+00
CO	n/a	84.0	0.45	9.02E-01
Lead	n/a	0.0005	2.68E-06	5.37E-06
SO2	n/a	0.6	0.003	6.44E-03
VOC	n/a	5.5	0.03	5.91E-02
CO_2e	n/a	120,000	644.38	1.29E+03
Arsenic (As)	7440-38-2	2.00E-04	1.07E-06	2.15E-06
Beryllium (Be)	7440-41-7	1.20E-05	6.44E-08	1.29E-07
Cadmium (Cd)	7440-43-9	1.10E-03	5.91E-06	1.18E-05
Chromium (Cr)	7440-47-3	1.40E-03	7.52E-06	1.50E-05
Cobalt (Co)	7440-48-4	8.40E-05	4.51E-07	9.02E-07
Manganese (Mn)	7439-96-5	3.80E-04	2.04E-06	4.08E-06
Mercury (Hg)	7439-97-6	2.60E-04	1.40E-06	2.79E-06
Nickel (Ni)	7440-02-0	2.10E-03	1.13E-05	2.26E-05
Selenium (Se)	7782-49-2	2.40E-05	1.29E-07	2.58E-07
POM/2-Methylnaphthalene	91-57-6	2.40E-05	1.29E-07	2.58E-07
POM/3-Methylchloranthrene	56-49-5	1.80E-06	9.67E-09	1.93E-08
POM/7,12-Dimethylbenz(a)anthracene	57-97-6	1.60E-05	8.59E-08	1.72E-07
POM/Acenaphthene	83-32-9	1.80E-06	9.67E-09	1.93E-08
POM/Acenaphthylene	203-96-8	1.80E-06	9.67E-09	1.93E-08
POM/Anthracene	120-12-7	2.40E-06	1.29E-08	2.58E-08
POM/Benz(a)anthracene	56-55-3	1.80E-06	9.67E-09	1.93E-08
Benzene	71-43-2	2.10E-03	1.13E-05	2.26E-05
POM/Benzo(a)pyrene	50-32-8	1.20E-06	6.44E-09	1.29E-08
POM/Benzo(b)fluoranthene	205-99-2	1.20E-06	6.44E-09	1.29E-08
POM/Benzo(g,h,i)perylene	191-24-2	1.20E-06	6.44E-09	1.29E-08
POM/Benzo(k)fluoranthene	205-82-3	1.80E-06	9.67E-09	1.93E-08
POM/Chrysene	218-01-9	1.80E-06	9.67E-09	1.93E-08
POM/Dibenzo(a,h)anthracene	53-70-3	1.20E-06	6.44E-09	1.29E-08
Dichlorobenzene	25321-22-6	1.20E-03	6.44E-06	1.29E-05
POM/Fluoranthene	206-44-0	3.00E-06	1.61E-08	3.22E-08
POM/Fluorene	86-73-7	2.80E-06	1.50E-08	3.01E-08
Formaldehyde	50-00-0	7.50E-02	4.03E-04	8.05E-04
Hexane	110-54-3	1.80E+00	9.67E-03	1.93E-02
POM/Indeno(1,2,3-cd)pyrene	193-39-5	1.80E-06	9.67E-09	1.93E-08
Naphthalene	91-20-3	6.10E-04	3.28E-06	6.55E-06
POM/Phenanathrene	85-01-8	1.70E-05	9.13E-08	1.83E-07
POM/Pyrene	129-00-0	5.00E-06	2.68E-08	5.37E-08
Toluene	108-88-3	3.40E-03	1.83E-05	3.65E-05
Total POM			4.70E-07	9.41E-07
Total HAPs			1.01E-02	2.03E-02

Note 1: FROM AP-42 Fifth Edition, Supplement D, TABLE 1.4-2&3&4. 7/98 External Combustion Sources 1.4-9. Many emission factors < than specific value. In this case, specific value used to error on conservative side

EXAMPLE CALCULATIONS:
Maximum Hourly Emission = Max.hourly Fuel Usage rate (standard cubic feet hour) x (Pollutant E.F.)
Maximum Yearly Emission = Max.Hourly Emission Rate (lb/hr) x (Maximum Hours of Operation)

Uncontrolled Emission Calculations
CAM Applicability
East Jordan Foundry, LLC
Elmira, Michigan

Flow Diagram Designation
MUA-11

Process Description:
MUA-11
Control Device: None

Natural Gas Combustion

Inputs

5.47722	= Max. Hourly Heat Input Rate (MMBtu/hr)
1020	= MMBtu/MMscf
5369.8	= Max. Hourly Fuel Usage Rate (standard cubic feet hour)
4000	= Maximum Operation (hours/year)
21.47929	= Maximum Annual Fuel Usage (MMscf)

POLLUTANT	CAS #	Note 1 Emission Factor ($lb/10^6$ scf)	Maximum Emissions (lbs/hr)	(tpy)
PM/PM10/PM2.5	n/a	7.6	0.04	8.16E-02
NOx	n/a	100.0	0.54	1.07E+00
CO	n/a	84.0	0.45	9.02E-01
Lead	n/a	0.0005	2.68E-06	5.37E-06
SO2	n/a	0.6	0.003	6.44E-03
VOC	n/a	5.5	0.03	5.91E-02
CO_2e	n/a	120,000	644.38	1.29E+03
Arsenic (As)	7440-38-2	2.00E-04	1.07E-06	2.15E-06
Beryllium (Be)	7440-41-7	1.20E-05	6.44E-08	1.29E-07
Cadmium (Cd)	7440-43-9	1.10E-03	5.91E-06	1.18E-05
Chromium (Cr)	7440-47-3	1.40E-03	7.52E-06	1.50E-05
Cobalt (Co)	7440-48-4	8.40E-05	4.51E-07	9.02E-07
Manganese (Mn)	7439-96-5	3.80E-04	2.04E-06	4.08E-06
Mercury (Hg)	7439-97-6	2.60E-04	1.40E-06	2.79E-06
Nickel (Ni)	7440-02-0	2.10E-03	1.13E-05	2.26E-05
Selenium (Se)	7782-49-2	2.40E-05	1.29E-07	2.58E-07
POM/2-Methylnaphthalene	91-57-6	2.40E-05	1.29E-07	2.58E-07
POM/3-Methylchloranthrene	56-49-5	1.80E-06	9.67E-09	1.93E-08
POM/7,12-Dimethylbenz(a)anthracene	57-97-6	1.60E-05	8.59E-08	1.72E-07
POM/Acenaphthene	83-32-9	1.80E-06	9.67E-09	1.93E-08
POM/Acenaphthylene	203-96-8	1.80E-06	9.67E-09	1.93E-08
POM/Anthracene	120-12-7	2.40E-06	1.29E-08	2.58E-08
POM/Benz(a)anthracene	56-55-3	1.80E-06	9.67E-09	1.93E-08
Benzene	71-43-2	2.10E-03	1.13E-05	2.26E-05
POM/Benzo(a)pyrene	50-32-8	1.20E-06	6.44E-09	1.29E-08
POM/Benzo(b)fluoranthene	205-99-2	1.20E-06	6.44E-09	1.29E-08
POM/Benzo(g,h,i)perylene	191-24-2	1.20E-06	6.44E-09	1.29E-08
POM/Benzo(k)fluoranthene	205-82-3	1.80E-06	9.67E-09	1.93E-08
POM/Chrysene	218-01-9	1.80E-06	9.67E-09	1.93E-08
POM/Dibenzo(a,h)anthracene	53-70-3	1.20E-06	6.44E-09	1.29E-08
Dichlorobenzene	25321-22-6	1.20E-03	6.44E-06	1.29E-05
POM/Fluoranthene	206-44-0	3.00E-06	1.61E-08	3.22E-08
POM/Fluorene	86-73-7	2.80E-06	1.50E-08	3.01E-08
Formaldehyde	50-00-0	7.50E-02	4.03E-04	8.05E-04
Hexane	110-54-3	1.80E+00	9.67E-03	1.93E-02
POM/Indeno(1,2,3-cd)pyrene	193-39-5	1.80E-06	9.67E-09	1.93E-08
Naphthalene	91-20-3	6.10E-04	3.28E-06	6.55E-06
POM/Phenanathrene	85-01-8	1.70E-05	9.13E-08	1.83E-07
POM/Pyrene	129-00-0	5.00E-06	2.68E-08	5.37E-08
Toluene	108-88-3	3.40E-03	1.83E-05	3.65E-05
Total POM			4.70E-07	9.41E-07
Total HAPs			1.01E-02	2.03E-02

Note 1: FROM AP-42 Fifth Edition, Supplement D, TABLE 1.4-2&3&4. 7/98 External Combustion Sources 1.4-9. Many emission factors < than specific value. In this case, specific value used to error on conservative side

EXAMPLE CALCULATIONS:
Maximum Hourly Emission = Max.hourly Fuel Usage rate (standard cubic feet hour) x (Pollutant E.F.)
Maximum Yearly Emission = Max.Hourly Emission Rate (lb/hr) x (Maximum Hours of Operation)

Uncontrolled Emission Calculations
CAM Applicability
East Jordan Foundry, LLC
Elmira, Michigan

Flow Diagram Designation
Various NG Sources

Process Description:
Various NG Sources
Control Device: None

Natural Gas Combustion

Inputs

4.656	= Max. Hourly Heat Input Rate (MMBtu/hr)
1020	= MMBtu/MMscf
4564.7	= Max. Hourly Fuel Usage Rate (standard cubic feet hour)
6000	= Maximum Operation (hours/year)
27.38824	= Maximum Annual Fuel Usage (MMscf)

POLLUTANT	CAS #	Note 1 Emission Factor ($lb/10^6$ scf)	Maximum Emissions (lbs/hr)	(tpy)
PM/PM10/PM2.5	n/a	7.6	0.03	1.04E-01
NOx	n/a	100.0	0.46	1.37E+00
CO	n/a	84.0	0.38	1.15E+00
Lead	n/a	0.0005	2.28E-06	6.85E-06
SO2	n/a	0.6	0.003	8.22E-03
VOC	n/a	5.5	0.03	7.53E-02
CO_2e	n/a	120,000	547.76	1.64E+03
Arsenic (As)	7440-38-2	2.00E-04	9.13E-07	2.74E-06
Beryllium (Be)	7440-41-7	1.20E-05	5.48E-08	1.64E-07
Cadmium (Cd)	7440-43-9	1.10E-03	5.02E-06	1.51E-05
Chromium (Cr)	7440-47-3	1.40E-03	6.39E-06	1.92E-05
Cobalt (Co)	7440-48-4	8.40E-05	3.83E-07	1.15E-06
Manganese (Mn)	7439-96-5	3.80E-04	1.73E-06	5.20E-06
Mercury (Hg)	7439-97-6	2.60E-04	1.19E-06	3.56E-06
Nickel (Ni)	7440-02-0	2.10E-03	9.59E-06	2.88E-05
Selenium (Se)	7782-49-2	2.40E-05	1.10E-07	3.29E-07
POM/2-Methylnaphthalene	91-57-6	2.40E-05	1.10E-07	3.29E-07
POM/3-Methylchloranthrene	56-49-5	1.80E-06	8.22E-09	2.46E-08
POM/7,12-Dimethylbenz(a)anthracene	57-97-6	1.60E-05	7.30E-08	2.19E-07
POM/Acenaphthene	83-32-9	1.80E-06	8.22E-09	2.46E-08
POM/Acenaphthylene	203-96-8	1.80E-06	8.22E-09	2.46E-08
POM/Anthracene	120-12-7	2.40E-06	1.10E-08	3.29E-08
POM/Benz(a)anthracene	56-55-3	1.80E-06	8.22E-09	2.46E-08
Benzene	71-43-2	2.10E-03	9.59E-06	2.88E-05
POM/Benzo(a)pyrene	50-32-8	1.20E-06	5.48E-09	1.64E-08
POM/Benzo(b)fluoranthene	205-99-2	1.20E-06	5.48E-09	1.64E-08
POM/Benzo(g,h,i)perylene	191-24-2	1.20E-06	5.48E-09	1.64E-08
POM/Benzo(k)fluoranthene	205-82-3	1.80E-06	8.22E-09	2.46E-08
POM/Chrysene	218-01-9	1.80E-06	8.22E-09	2.46E-08
POM/Dibenzo(a,h)anthracene	53-70-3	1.20E-06	5.48E-09	1.64E-08
Dichlorobenzene	25321-22-6	1.20E-03	5.48E-06	1.64E-05
POM/Fluoranthene	206-44-0	3.00E-06	1.37E-08	4.11E-08
POM/Fluorene	86-73-7	2.80E-06	1.28E-08	3.83E-08
Formaldehyde	50-00-0	7.50E-02	3.42E-04	1.03E-03
Hexane	110-54-3	1.80E+00	8.22E-03	2.46E-02
POM/Indeno(1,2,3-cd)pyrene	193-39-5	1.80E-06	8.22E-09	2.46E-08
Naphthalene	91-20-3	6.10E-04	2.78E-06	8.35E-06
POM/Phenanathrene	85-01-8	1.70E-05	7.76E-08	2.33E-07
POM/Pyrene	129-00-0	5.00E-06	2.28E-08	6.85E-08
Toluene	108-88-3	3.40E-03	1.55E-05	4.66E-05
Total POM			4.00E-07	1.20E-06
Total HAPs			8.62E-03	2.59E-02

Note 1: FROM AP-42 Fifth Edition, Supplement D, TABLE 1.4-2&3&4. 7/98 External Combustion Sources 1.4-9. Many emission factors < than specific value. In this case, specific value used to error on conservative side

EXAMPLE CALCULATIONS:
Maximum Hourly Emission = Max.hourly Fuel Usage rate (standard cubic feet hour) x (Pollutant E.F.)
Maximum Yearly Emission = Max.Hourly Emission Rate (lb/hr) x (Maximum Hours of Operation)

Uncontrolled Emission Calculations
CAM Applicability
East Jordan Foundry, LLC
Elmira, Michigan

Flow Diagram Designation
EG-1

Process Description:
EG-1
Control Device:

Natural Gas Combustion

	Inputs	
Note 2	459.0	= Rating of Generator (hp)
	300.0	= Rating of Generator (KW)
	7000	= Brake Specific Fuel Consumption Btu/hp-hr (AP-42 Table 3.3-1, footnote a)
	3.2130	= Max. Hourly Heat Input Rate (MMBtu/hr)
	150.0	= Maximum Operation (hours/year)

POLLUTANT	CAS #	Note 1 Emission Factor (lb/MMBtu) Fuel Input	Maximum Emissions (lbs/hr)	Maximum Emissions (tpy)
PM	n/a	0.0099	0.032	0.002
PM10/PM2.5	n/a	0.0095	0.031	0.002
NOx	n/a	2.27	7.294	0.547
CO	n/a	3.72	11.952	0.896
Lead	n/a			
SO2	n/a	0.0006	0.002	0.000
VOC	n/a	0.0296	0.095	0.007
CO_2	n/a	110	353.43	26.51
N_2O	n/a			
Methane	n/a	0.23	0.74	0.06
CO_2e	n/a	115.75	371.9	27.89
1,1,2-Trichloroethane	79-00-5	ND	ND	ND
1,3-Butadiene	106-99-0	6.63E-04	2.13E-03	1.60E-04
1,3-Dichloropropene	542-75-6	ND	ND	ND
Acetaldehyde	75-07-0	2.79E-03	8.96E-03	6.72E-04
Acrolein	107-02-8	2.63E-03	8.45E-03	6.34E-04
Benzene	71-43-2	1.58E-03	5.08E-03	3.81E-04
Carbon Tetrachloride	56-23-5	ND	ND	ND
Chlorobenzene	108-90-7	ND	ND	ND
Chloroform	67-66-3	ND	ND	ND
Ethylbenzene	100-41-4	ND	ND	ND
Ethylene Dibromide (Dibromoethane)	106-93-4	ND	ND	ND
Ethylene Dichloride (1,2-Dichloroethane)	107-06-2	ND	ND	ND
Ethylidene Dichloride (1,1-Dichloroethane)	75-34-3	ND	ND	ND
Formaldehyde	50-00-0	2.05E-02	6.59E-02	4.94E-03
Methanol	67-56-1	3.06E-03	9.83E-03	7.37E-04
Methyl Chloride (Chloromethane)	74-87-3	4.12E-05	1.32E-04	9.93E-06
Naphthalene	91-20-3	9.71E-05	3.12E-04	2.34E-05
PAH	n/a	1.41E-04	4.53E-04	3.40E-05
Propylene Dichloride (1,2-Dichloropropane)	78-87-5	ND	ND	ND
Styrene	100-42-5	1.19E-05	3.82E-05	2.87E-06
Toluene	108-88-3	5.58E-04	1.79E-03	1.34E-04
Vinyl Chloride	75-01-4	ND	ND	ND
Xylenes (isomers and mixture)	1330-20-7	1.95E-04	6.27E-04	4.70E-05
Total HAPs			1.04E-01	7.78E-03

Note 1: FROM AP-42 Fifth Edition, Supplement F, Ch. 3.2 TABLE 3.2-3. 8/2000. Many emission factors < than detectable value, these emission factors are represented as undetectable (ND).
Note 2: Manufacturer spec sheet

Maximum Hourly Emission = Max.hourly Fuel Usage rate (standard cubic feet hour) x (Pollutant E.F.)
Maximum Yearly Emission = Max.Hourly Emission Rate (lb/hr) x (Maximum Hours of Operation)

Uncontrolled Emission Calculations
CAM Applicability
East Jordan Foundry, LLC
Elmira, Michigan

Flow Diagram Designation
EG-2

Process Description:
EG-2
Control Device:

Natural Gas Combustion

	Inputs	
Note 2	459.0	= Rating of Generator (hp)
	300.0	= Rating of Generator (KW)
	7000	= Brake Specific Fuel Consumption Btu/hp-hr (AP-42 Table 3.3-1, footnote a)
	3.2130	= Max. Hourly Heat Input Rate (MMBtu/hr)
	150.0	= Maximum Operation (hours/year)

POLLUTANT	CAS #	Note 1 Emission Factor (lb/MMBtu) Fuel Input	Maximum Emissions (lbs/hr)	Maximum Emissions (tpy)
PM	n/a	0.0099	0.032	0.002
PM10/PM2.5	n/a	0.0095	0.031	0.002
NOx	n/a	2.27	7.294	0.547
CO	n/a	3.72	11.952	0.896
Lead	n/a			
SO2	n/a	0.0006	0.002	0.000
VOC	n/a	0.0296	0.095	0.007
CO_2	n/a	110	353.43	26.51
N_2O	n/a			
Methane	n/a	0.23	0.74	0.06
CO_2e	n/a	115.75	371.9	27.89
1,1,2-Trichloroethane	79-00-5	ND	ND	ND
1,3-Butadiene	106-99-0	6.63E-04	2.13E-03	1.60E-04
1,3-Dichloropropene	542-75-6	ND	ND	ND
Acetaldehyde	75-07-0	2.79E-03	8.96E-03	6.72E-04
Acrolein	107-02-8	2.63E-03	8.45E-03	6.34E-04
Benzene	71-43-2	1.58E-03	5.08E-03	3.81E-04
Carbon Tetrachloride	56-23-5	ND	ND	ND
Chlorobenzene	108-90-7	ND	ND	ND
Chloroform	67-66-3	ND	ND	ND
Ethylbenzene	100-41-4	ND	ND	ND
Ethylene Dibromide (Dibromoethane)	106-93-4	ND	ND	ND
Ethylene Dichloride (1,2-Dichloroethane)	107-06-2	ND	ND	ND
Ethylidene Dichloride (1,1-Dichloroethane)	75-34-3	ND	ND	ND
Formaldehyde	50-00-0	2.05E-02	6.59E-02	4.94E-03
Methanol	67-56-1	3.06E-03	9.83E-03	7.37E-04
Methyl Chloride (Chloromethane)	74-87-3	4.12E-05	1.32E-04	9.93E-06
Naphthalene	91-20-3	9.71E-05	3.12E-04	2.34E-05
PAH	n/a	1.41E-04	4.53E-04	3.40E-05
Propylene Dichloride (1,2-Dichloropropane)	78-87-5	ND	ND	ND
Styrene	100-42-5	1.19E-05	3.82E-05	2.87E-06
Toluene	108-88-3	5.58E-04	1.79E-03	1.34E-04
Vinyl Chloride	75-01-4	ND	ND	ND
Xylenes (isomers and mixture)	1330-20-7	1.95E-04	6.27E-04	4.70E-05
Total HAPs			1.04E-01	7.78E-03

Note 1: FROM AP-42 Fifth Edition, Supplement F, Ch. 3.2 TABLE 3.2-3. 8/2000. Many emission factors < than detectable value, these emission factors are represented as undetectable (ND).
Note 2: Manufacturer spec sheet

Maximum Hourly Emission = Max.hourly Fuel Usage rate (standard cubic feet hour) x (Pollutant E.F.)
Maximum Yearly Emission = Max.Hourly Emission Rate (lb/hr) x (Maximum Hours of Operation)

Flow Diagram Designation
Road Fug. Dust
East Jordan Foundry, LLC
Paved Road Calculation - Projected

AP-42 (1/11 Version) Ch. 13.2.1
Paved Road Calculation - Projected $E = k * (sL/2)^{0.65} * (W/3)^{1.5}$

E = PM-10 emissions factor (lb/VMT)
k = Base emission factor (lb/VMT) - PM-10
sL = Silt loading (g/m^2)
W = Mean vehicle weight (tons)

0.4 Round trip distance per vehicle (mi)

Paved Roadways	Number of Round Trips/day	k lb/VMT	sL g/m^2	W tons	E lb/VMT	Control Efficiency	Miles Traveled Projected Miles/Year	Emissions (TPY) PM	PM10	PM2.5 [f]	Emissions (lb/hr) PM	PM10	PM2.5
	Note 2		Note 1			Note 4	Note 3				Note 5	Note 5	Note 5,6
Employee Parking Lot -Cars PM	300	0.082	9.7	2.5	0.17	75	120.0	0.003			0.001		
Employee Parking Lot Cars PM-10	300	0.016	9.7	2.5	0.03	75	120.0		0.001			0.000	
Employee Parking Lot Cars PM-2.5	300	0.016	9.7	2.5	0.03	75	120.0			0.001			0.000
Shipping Castings-PM	26	0.082	9.7	40	11.14	75	10.4	0.014			0.003		
Shipping Castings-PM-10	26	0.016	9.7	40	2.17	75	10.4		0.003			0.001	
Shipping Castings-PM-2.5	26	0.016	9.7	40	2.17	75	10.4			0.003			0.001
Receiving Scrap Metal- PM	26	0.082	9.7	40	11.14	75	10.4	0.014			0.003		
Receiving Scrap Metal PM-10	26	0.016	9.7	40	2.17	75	10.4		0.003			0.001	
Receiving Scrap Metal PM-2.5	26	0.016	9.7	40	2.17	75	10.4			0.003			0.001
Receiving Sand- PM	7	0.082	9.7	40	11.14	75	2.8	0.004			0.001		
Receiving Sand- PM-10	7	0.016	9.7	40	2.17	75	2.8		0.001			0.000	
Receiving Sand- PM-2.5	7	0.016	9.7	40	2.17	75	2.8			0.001			0.000
Receiving Other Materials- PM	5	0.082	9.7	40	11.14	75	2.0	0.003			0.001		
Receiving Other Materials- PM-10	5	0.016	9.7	40	2.17	75	2.0		0.001			0.000	
Receiving Other Materials- PM-2.5	5	0.016	9.7	40	2.17	75	2.0			0.001			0.000
Removing Sand Pit Waste -PM	2	0.082	9.7	30	7.24	75	0.8	0.001			0.000		
Removing Sand Pit Waste -PM-10	2	0.016	9.7	30	1.41	75	0.8		0.000			0.000	
Removing Sand Pit Waste -PM-2.5	2	0.016	9.7	30	1.41	75	0.8			0.000			0.000
							TOTAL:	**0.039**	**0.008**	**0.008**	**0.009**	**0.002**	**0.002**

Note 1: Numbers from AP-42 (Version 1/11) Ch.13.2.1 Table 13.2.1-1
Note 2: Emissions estimate based on figures provided by EJIW and on Maximum production levels. Estimate high to be conservative.
Note 3: Emissions based on potential metal poured of 180,000 tpy
Note 4: Control efficiency of 75% for street sweeping from RACM, Tabe 2.1.1-3 Ohio EPA
Note 5: Lb/hr emission rate calculated by multiplying the tpy emission rate by 2000 lbs/ton and dividing by number of Maximum operating rate hours/yr.
Note 6: Assumed PM2.5 is equal to PM10

PROPOSED OPERATING SCHEDULE
24 hours/day
8,760 hours/year

Uncontrolled Emission Calculations
CAM Applicability
East Jordan Foundry, LLC
Elmira, Michigan

Maximum Yearly Capacity
19,200 Tons/Year

Flow Diagram Designation
Waste Sand Dust Handling

Maximum Hourly Capacity
3.90 Tons/Hour

Process Description:
East Jordan Foundry, LLC
Waste Sand Dust Handling
Control Device: Baghouse H/J
SCC Code:
Control Device Outlet: gr/dscf
Airflow: acfm
Stack Gas Temperature: °F

Facility Process Name:	Criteria Pollutants								
Waste Sand Dust Handling									
Emission Factor Basis:	**PM**	**PM10**	**PM2.5**	**SOx**	**NOx**	**VOC**	**CO**	**Lead**	**CO_2e**
Emission Factors:	0.65	0.54	0.54						
(source)	Note 1	Note 2	Note 3						
Capture Efficiency									
Control Efficiency									
Building Capt. Eff									
Maximum Stack Emission Rate:									
Hourly (lb/hr)									
Annual (TPY)									
Maximum Fugitive Emission Rate:									
Hourly (lb/hr)	2.535	2.106	2.106						
Annual (TPY)	**6.240**	**5.184**	**5.184**						
Total Emission Rate:									
Hourly (lb/hr)	2.535	2.106	2.106						
Annual (TPY)	**6.240**	**5.184**	**5.184**						

PROPOSED OPERATING SCHEDULE
24 HRS/DAY
6,000 HRS/YEAR

Note 1: Emission factor from EPA Document No. 450/4-90-003, March 1990
Note 2: Emission factor from FIRE 6.25 SCC 3-04-003-50
Note 3: Assumes PM2.5 is equal to PM10

EXAMPLE CALCULATIONS:
Maximum Stack Emission Rate (lb/hr) {PM,PM-10} =(gr/acfm) x (acfm) x (1 lb / 7000 grains) x (60 min / 1 hr)
Maximum Annual (Ton/yr) stack Emission Rates = (lb/hr emission rate) x (hours of operation per year at max. rate) x (ton/2000 lbs)
Maximum Fugitive Emission Rate (lb/hr) = ((1 - Capture Efficiency/100) x (Emission Factor) x (Melt ton/hr) x (1-(Settling Factor)/100)
Maximum Annual Fugitive Emissions (ton/yr)= (Hourly fugitive emissions (lb/hr)/ hourly Process rate (ton/hr) x (Annual process rate (tons/yr) x (ton/2000 lbs)
Total Emission Rate (lb/hr) = (Maximum Stack Emission Rate lb/hr) + (Maximum Fugitive Emission Rate lb/hr)
Total Emission Rates Annual (TPY)= (annual stack emissions (ton/yr)) + (annual fugitive emissions (ton/yr))

EGLE

RENEWABLE OPERATING PERMIT APPLICATION
AI-001: ADDITIONAL INFORMATION

This information is required by Article II, Chapter 1, Part 55 (Air Pollution Control) of P.A. 451 of 1994, as amended, and the Federal Clean Air Act of 1990. Failure to obtain a permit required by Part 55 may result in penalties and/or imprisonment. Please type or print clearly. Refer to instructions for additional information to complete this form.

SRN: N6052	Section Number (if applicable):

1. Additional Information ID
AI-S-003(11)

Additional Information

2. Is This Information Confidential? ☐ Yes ☒ No

11. Does the source have any required plans such as a malfunction abatement plan, fugitive dust plan, operatoin/maintenance plan, startup/shutdown plans or any other monitoring plan? If Yes, then the plan(s) must be submitted with this application on an AI-001 Form.

Yes. Please find the attached plans specific to EJF including:

Scrap Selection and Inspection Plan
Malfunction Abatement Plan

A Fugitive Dust Plan is included as Appendix A in the attached PTI.

Scrap Selection and Inspection Plan (S-ENV-1546, Rev. B)

Scrap Selection and Inspection Plan
East Jordan Foundry, LLC (EJF)
2675 N. US 131
Elmira, Michigan

As required by
40 CFR 63 Subpart ZZZZZ, National Emission Standards for Hazardous Air Pollutants for Iron and Steel Foundries Area Sources

May 2019

Table of Contents

1.0 INTRODUCTION **2**

1.1 PURPOSE 3
1.2 SCOPE 3

2.0 SCRAP SELECTION AND INSPECTION **4**

2.1 MATERIAL ACQUISITION 4
2.2 VISUAL INSPECTION PROCEDURES 4

3.0 PLAN DISTRIBUTION AND VENDOR NOTIFICATION **5**

4.0 DOCUMENT CONTROL **6**

APPENDIX A - EXTERNAL SPECIFICATIONS **7**

APPENDIX B - INTERNAL PROCEDURES **8**

APPENDIX C - VENDOR NOTIFICATION LETTER (EXAMPLE LETTER) **9**

APPENDIX D - PAINT FILTER LIQUIDS TEST **11**

Plan Revision and Updates

Date	Section(s)	Description
October 2018, Rev. A	All	Initial issuance of plan
May 2019, Rev. B	All	Revised prior to submittal to EPA/EGLE (MDEQ)

1.0 Introduction

On January 2, 2008, the Environmental Protection Agency (EPA) promulgated the National Emission Standards for Hazardous Air Pollutants (NESHAP) for Iron and Steel Foundries Area Sources (Subpart ZZZZZ). These standards implement section 112 (d)(5) of the Clean Air Act (CAA) by requiring all sources to meet hazardous air pollutant (HAP) emission standards reflecting application of generally available control technology (GACT). The East Jordan Foundry located in Elmira, Michigan is currently considered an area source of HAP's.
Further East Jordan Foundry is a "new" affected source per §63.10880 (b)(2) as construction was started after September 17, 2007. Per §63.10885(g), as a "new" affected source, East Jordan Foundry is required to determine initial applicability based on the facility's annual metal melting capacity and has determined the facility must meet the requirements of a "large" foundry.

Subpart ZZZZZ establishes "large" foundry requirements for demonstrating initial and continuous compliance with pollution prevention management practices, work practice standards, operational and maintenance requirements, monitoring requirements, performance testing requirements, and recordkeeping and reporting requirements. One of the pollution prevention management practices of this subpart, is the management practice for metallic scrap and mercury switches. Section §63.10885(a) describes the Metallic Scrap Management Program requirements, while section §63.10885(b) describes the Mercury Requirements.

Per §63.10881(c) as a "new" affected source, the East Jordan Foundry has achieved compliance with the applicable provisions of Subpart ZZZZZ upon startup.

Section §63.10885(a) Metallic Scrap Management Program requirements:
§63.10885(a) provides requirements for metallic scrap requirement programs for "restricted metallic scrap" and "general iron and steel scrap." For each segregated metallic scrap storage area, bin or pile, East Jordan Foundry, LLC (EJF) must comply with the materials acquisition requirements of §63.10885(a)(1) for "restricted metallic scrap" or (2) for "general iron and steel scrap.". EJF must keep a copy of the material specifications onsite and readily available to all personnel with material acquisition duties and provide a copy to each of your scrap providers.

EJF may have certain scrap subject to either §63.10885 (a)(1) or (2) and will ensure provided the metallic scrap remains segregated until charge make-up should that be the case.

As required by §63.10885(a)(1) for "restricted metallic scrap". (Purchasing Specification)
EJF will prepare and operate at all times according to written material specifications for the purchase and use of only metal ingots, pig iron, slitter, or other materials that do not include post-consumer automotive body scrap, post-consumer engine blocks, post-consumer oil filters, oily turnings, lead components, chlorinated plastics, or free liquids. "Free liquids" is defined as material that fails the paint filter liquids test by EPA Method 9095B (see Appendix D). The requirements for no free liquids do not apply if the owner or operator can demonstrate that the free liquid is water that resulted from scrap exposure to natural precipitation (rain, snow, sleet, etc.).

Per section §63.10885(a)(2) for "general iron and steel scrap". (Inspection Procedures)

EJF will prepare and operate at all times according to written material specifications for the purchase and use of only iron and steel scrap that has been depleted (to the extent practicable) of organics and HAP metals in the charge materials used by the iron and steel foundry. At a minimum the material specification must include: that for metallic scrap materials charged to a metal melting furnace must be depleted (to the extent practicable) of the presence of used oil filters, chlorinated plastic parts, accessible lead-containing components (such as batteries and wheel weights), and to ensure the scrap materials are drained of free liquids.

Section §63.10885(b) Mercury requirements:

As defined in §63.10906. "Motor vehicle scrap means vehicle or automobile bodies, including automobile body hulks, that have been processed through a shredder. Motor vehicle scrap does not include automobile manufacturing bundles, or miscellaneous vehicle parts, such as wheels, bumpers, or other components that do not contain mercury switches." EJF does not intend to procure scrap containing motor vehicle scrap and therefore per §63.10885(b)(4) EJF will certify in the notification of compliance status and maintain records of documentation that the scrap does not contain motor vehicle scrap.

1.1 Purpose

This Scrap Selection and Inspection Plan has been created to fulfill the pollution prevention management practice of Subpart ZZZZZ. The purpose of the plan is as follows:

To eliminate or minimize, to the extent practicable, the amount of potentially polluting materials in the charge material used by East Jordan Foundry, LLC in its foundry operations.

1.2 Scope

The Scrap Selection and Inspection Plan includes instructions to ensure the plan fulfills the following basic functions.

- Establishment of written procedures to include:
  - The purchase and use of only metal ingots, pig iron, slitter, or other materials that do not include post-consumer automotive body scrap, post-consumer engine blocks, post-consumer oil filters, oily turnings, lead components, chlorinated plastics, or free liquids.
  - The purchase and use of only iron and steel scrap that has been depleted (to the extent practicable) of organics and HAP metals.
  - Prohibiting the purchase or use of motor vehicle scrap.
- Establishment of written procedures for scrap inspection and maintains records documenting inspections, including how iron and steel scrap must be depleted (to the extent practicable) of the presence of used oil filters, chlorinated plastic parts, accessible lead-containing components (such as batteries and wheel weights) and drained of free liquids.

2.0 Scrap Selection and Inspection

East Jordan Foundry, LLC (EJF) is a gray and ductile iron foundry. As a part of our operation, scrap is purchased and then charged to four (4) Electric Induction Furnaces (EIF) to produce molten metal that is used in the manufacture of our products.

As stated above, this scrap selection and inspection plan has been developed such that scrap is purchased that is free of plastic, lead components, batteries, and liquid organics (to the extent practicable). The components of the scrap selection and inspection plan, including recordkeeping forms, have been prepared in an ISO format and are included in Appendix A-D with the material specification and work instructions.

2.1 Material Acquisition

EJF scrap and raw material purchases are included in the following specifications:

- Electric Melting Metallic Scrap and Raw Material Specification, SPEC-0100
- External Electric Melting Metallics Inspection Specification, SPEC-0101

These materials and their specifications are included in Appendix A. Additional material categories may be added or deleted in the future and such changes will be documented. These specifications document and describe unacceptable material scrap loads containing plastic and free liquids, mercury switches, lead components, etc. EJF will not purchase or use motor vehicle scrap, as defined in §63.10906

2.2 Visual Inspection Procedures

The procedure requires the visual inspection of a representative portion but not less than 10% of all incoming scrap to ensure the scrap material meets specifications. EJF will inspect a minimum of 10% of all incoming scrap.

The inspection procedures include the following:

- identify the locations where scrap inspections are to be performed and the location (s) must provide a reasonable vantage point, considering worker safety
- include record keeping requirements that document each visual inspection
- include provisions for rejecting or returning shipments not meeting specifications
- limit purchases from vendors whose shipments fail to meet specifications more than three (3) times in one calendar year

The scrap inspection procedures are contained in the work instructions, Electric Melt Scrap Inspection, F0290-0277, Receiving Procedures 0700-0135, and fulfill all these requirements.

3.0 Plan Distribution and Vendor Notification

A copy of the Scrap Selection and Inspection Plan is kept onsite and maintained with the Environmental and Safety Manager. This plan is readily available to all plant personnel involved with the materials acquisition or inspection of scrap materials.

Material specifications will be supplied to all East Jordan Foundry, LLC scrap vendors. The letter sent to all current scrap vendors is found in Appendix C. The approved vendor list is maintained in the Corporate QSI Supplier Management Database. It will be updated periodically, and new vendors will be sent material specifications.

4.0 Document Control

The documents presented in Appendix A-C are the current documents when this plan was issued. The QSI Document Control System contains the most current version of the documents.

Appendix A - External Specifications

See latest revision of: Electric Melting Metallic Scrap and Raw Material Specification, SPEC-0100

See latest revision of: External Electric Melting Metallics Inspection Specification, SPEC-0101

Appendix B - Internal Procedures

See latest revision of: Electric Melt Scrap Inspection, F0290-0277

See latest revision of: Receiving Procedures, 0700-0135

Appendix C - Vendor Notification Letter (Example Letter)

October X, 20XX

Dear Scrap Vendor,

Re: External Electric Melting Metallics Inspection Specification, SPEC-0101

Please find the enclosed specification, External Electric Melting Metallics Inspection Specification, SPEC-0101, which is a portion of our program relating to compliance with the MACT Standards. The new specification becomes effective at East Jordan Foundry, LLC, immediately upon startup of the foundry SPEC-0101 replaces all previous melt specifications that may have been provided to you in the past.

The new specifications zero in on some specific items that MACT Standards require you to minimize/eliminate from our scrap material flows, i.e. lead, mercury switches, plastic, and free liquids. Listed below are the grades of scrap we will be purchasing:

Item Number	Description
7281951E	#1 Shredded Scrap
7281951E	Plate & Structural
7281951E	Flashings
7281951E	OTM
7281951E	Rail Crop
7291923E	Busheling
7291923E	#1 Shredded Clip
7269807E	Clean Auto Cast
7176257	Pig Iron, Basic

East Jordan Foundry, LLC will not be purchasing scrap containing motor vehicle scrap, as defined in §63.10906. "Motor vehicle scrap means vehicle or automobile bodies, including automobile body hulks, that have been processed through a shredder. Motor vehicle scrap does not include automobile manufacturing bundles, or miscellaneous vehicle parts, such as wheels, bumpers, or other components that do not contain mercury switches." If your foundry steel or shredded contains motor vehicle scrap, it will be returned to your facility at your cost.

Another part of this Standard that will impact all suppliers is that the Purchase Order number and Item Number must be written on all shippers (and bill of lading) to cover loads delivered to East Jordan Foundry, LLC. If a load is received that does not have this information on the shipper/bill of lading, it may not be accepted.

Please let me know if you have any questions pertaining to Electric Melting Metallics Inspection Specification. We will make every attempt to work with all of our suppliers to help them comply with these rules and regulations imposed on the foundry industry.

Sincerely,

Tony A. Pitts
Environmental Services Manager

Appendix D - Paint Filter Liquids Test

See latest revision of: SW-846 Test Method 9095B: Paint Filter Liquids Test, may be found at https://www.epa.gov/hw-sw846

Malfunction Abatement Plan (S-ENV-4443, Rev. A)

Malfunction Abatement Plan for:
East Jordan Foundry, LLC (EJF)
2675 N. US 131
Elmira, Michigan

As required by:
Michigan Rule 336.1911 and
40 CFR, Part 63, Subpart ZZZZZ, National Emission Standards for Hazardous Air Pollutants for Iron and Steel Foundries Area Sources

May 2019

Table of Contents

REVISIONS TO THE MALFUNCTION ABATEMENT PLAN **2**

1.0 INTRODUCTION **3**

1.1 PURPOSE 3

2.0 OPERATION AND PREVENTIVE MAINTENANCE (OPM) PROGRAM REQUIREMENTS **4**

2.1 FACILITY INFORMATION AND CONTACTS [R 336.1911(2)(A) AND §63.10896(A)(1)] 4
Table 1 – Facility Information and Contacts *4*
2.2 EQUIPMENT DESCRIPTIONS [R 336.1911(2)(B) AND §63.10896(A)(3)] 4
Table 2 – Emission Units and Descriptions *5*
Table 3 – Baghouses and Associated Emission Units *5*
2.3 PREVENTIVE MAINTENANCE AND INSPECTION SCHEDULES [R 336.1911(2)(A-B) AND §63.10896(A)(3)] ... 6
Table 4 – Baghouse - Inspection and Preventative Maintenance Schedule (Revised *6*
Table 5 – Emergency Generators - Inspection and Preventative Maintenance Schedule *7*
Table 6 – Differential Pressure Gauge - Inspection and Preventative Maintenance Schedule *7*
Table 7 – BLDS - Inspection and Preventative Maintenance Schedule *7*
2.4 MAJOR REPLACEMENT PARTS COST [R 336.1911(2)(A) AND §63.10896(A)(4)] 8
2.5 WORK ORDER SYSTEM 8
2.6 PREVENTIVE MAINTENANCE SYSTEM 8

3.0 AIR POLLUTION CONTROL DEVICE (APCD) OPERATING VARIABLES [R 336.1911(2)(B)] **10**

Table 8 – Pressure Gauge Operating Variables *10*

4.0 CORRECTIVE ACTIONS PROGRAM REQUIREMENTS [R 336.1911(2)(C)] **11**

4.1 CORRECTIVE ACTION PROCEDURES 11

5.0 SITE SPECFIC MONITORING PLAN [§63.10896(A)(5)] **13**

5.1 INSTALLATION 13
5.2 INITIAL AND PERIODIC ADJUSTMENTS 13
5.3 OPERATION AND QUALITY ASSURANCE PROCEDURES 13
5.4 PREVENTIVE MAINTENANCE AND SPARE PARTS INVENTORY 13
5.5 RECORDING AND STORING DATA 13
Table 9 – BLDS Operating Variables *14*
5.6 CORRECTIVE ACTIONS FOR BLDS ALARM 14
5.6.1 BLDS Alarm Set Point *14*
5.6.2 BLDS Corrective Actions *14*
5.6.3 BLDS Recordkeeping *14*

6.0 PLAN UPDATES AND REVISIONS **15**

6.1 PLAN UPDATES 15
6.2 UPDATE PROCEDURES 15
6.3 MAP RETENTION 15

APPENDIX A – MANUFACTURERS SPECIFICATIONS **16**

APPENDIX B – MALFUNCTION REPORT **17**

APPENDIX C – OBSERVED BLDS READINGS **18**

Revisions to the Malfunction Abatement Plan

Date	Section(s)	Description
May 2019	All	Initial issuance of document

1.0 INTRODUCTION

East Jordan Foundry, LLC (EJF) is subject to Michigan's Rule 336.1911 (also known as Rule 911) and 40 CFR, Part 63, Subpart ZZZZZ, National Emission Standards for Hazardous Air Pollutants for Iron and Steel Foundries Area Sources (also known as Area Source Foundry MACT), for Malfunction Abatement Plan and Operation and Maintenance Plan requirements, respectively. Because the facility is subject to both regulations, this Malfunction Abatement Plan (MAP) will incorporate the requirements of Operation and Maintenance Plan, as allowed in §63.10896(b).

The MAP must be submitted to MDEQ, implemented and maintained within 60 days of achieving the maximum production rate but not later than 180 days after initial startup of the facility. Per §63.10880 (b)(2), EJF is a "new affected source" as construction was started after September 17, 2007. Per §63.10881(c) as a "new" affected source, the East Jordan Foundry has achieved compliance with the applicable provisions of Subpart ZZZZZ including implemented the requirements of the O&M Plan upon startup.

This MAP will include the following:

a) A complete operation and preventative maintenance program, including identification of the supervisory personnel responsible for overseeing the inspection, maintenance, and repair of air-cleaning devices, a description of the items or conditions that shall be inspected, the frequency of the inspections or repairs, and an identification of the major replacement parts that shall be maintained in inventory for quick replacement.
b) An identification of the source and air-cleaning device operating variables that shall be monitored to detect a malfunction or failure, the normal operating range of these variables, and a description of the method of monitoring or surveillance procedures.
c) A description of the corrective procedures or operational changes that shall be taken in the event of a malfunction or failure to achieve compliance with the applicable emission limits.
d) A site-specific monitoring plan for each bag leak detection system.

1.1 Purpose

The purpose of MAP is to:

- Ensure that each affected source, including associated air pollution control and monitoring equipment, is operated in a manner that satisfies the general duty to minimize emissions;
- Ensure preparations have been made to correct malfunctions as soon as practicable after their occurrence in order to minimize excess emissions of hazardous air pollutants.

2.0 OPERATION AND PREVENTIVE MAINTENANCE (OPM) PROGRAM REQUIREMENTS

The complete operation and preventative maintenance (OPM) program includes the following:

- Facility Information and Contacts
- Equipment Descriptions
- Preventive Maintenance and Inspection Schedules
- Major Replacement Parts Cost
- Work Order System
- Preventive Maintenance System

2.1 Facility Information and Contacts [R 336.1911(2)(a) and §63.10896(a)(1)]

Table 1 details facility information and contacts for EJF.

Table 1 – Facility Information and Contacts

Site Name and Address:	East Jordan Foundry, LLC 2675 N. US 131 Elmira, MI 49730
Corporate Mailing Address:	EJ USA, Inc. 301 Spring St. East Jordan, MI 49727
Facility Manager:	Scott Nachazel 231-536-4531 scott.nachazel@ejco.com
Manufacturing Manager	Ted Rundblad 231-536-4553 ted.rundblad@ejco.com
Engineering and Maintenance Manager*	Darin Spearman 231-536-4866 darin.spearman@ejco.com
Environmental and Safety Manager	Tom Lenartowicz 231-536-4823 tom.lenartowicz@ejco.com
Environmental Services Manager	Tony Pitts 231-536-4663 tony.pitts@ejco.com

***The Maintenance Department, under direction of the Facility Manager and Engineering and Maintenance Manager, is ultimately responsible for inspecting, maintaining, and repairing emissions control devices and their associated production processes. [R 336.1911(2)(a) and §63.10896(a)(2)]**

2.2 Equipment Descriptions [R 336.1911(2)(b) and §63.10896(a)(3)]

East Jordan Foundry, LLC (EJF) operates a gray and ductile iron foundry. The foundry operation includes four (4) electric induction furnaces, providing molten iron to two (2) molding lines, and auxiliary equipment and processes.

Table 2 describes the affected emission units and Table 3 shows which baghouse services which emission unit, along with its continuous parameter monitoring system (CPMS).

Table 2 – Emission Units and Descriptions

Emission Unit ID	Emission Unit Description
EUCHRGHAND	Charge Handling - The handling and storage of furnace charge material include internal returns (e.g. sprue, scrap), incoming scrap metal, alloy materials, inoculants, fluxes, etc.
EUDUCTINOC	Ductile Inoculation - An addition of magnesium-based material to strengthen the metal when cast.
EUMLTXFER	Hot Metal Transfer - The transfer of hot metal in a ladle (transfer ladle) from the electric induction furnaces to the pouring operations.
EUSHMM	Sand Handling and Moldmaking – Includes Moldmaking and application of mold release.
EUEIF1, EUEIF2, EUEIF3, EUEIF4	Electric Induction Furnace Melting – Electric Induction Furnaces (EIF) to melt and process charge material. Design holding capacity 11 tons each.
EULMLPC	Large Mold Line Pouring and Cooling - The pouring and subsequent cooling of molten metal cast in a sand mold on the Large Mold Line. The mold and casting is subsequently transferred to the LML Shakeout.
EU1230PC	1230 Line Pouring and Cooling -The pouring and subsequent cooling of molten metal cast in a sand mold on the 1230 Line. The mold and casting is subsequently transferred to 1230 Line Shakeout.
EULMLSO	Large Mold Line Shakeout - The separation of mold and core sand from the casting. Sprue is subsequently transferred to Charge Handling, while mold and core sand is discharged to conveyors that are part of Sand Handling and Moldmaking.
EU1230SO	1230 Line Shakeout - The separation of mold and core sand from the casting. Sprue is subsequently transferred to Charge Handling, while mold and core sand is discharged to conveyors that are part of Sand Handling and MoldMaking.
EUWASTESAND	Waste Sand Dust Handling - The removal and disposition of spent sand from the system.
EUBLAST	Shotblasting - Enclosed process for the removal of excess sand and metal from casting surface.
EUGRIND	Grinding - Remove of unwanted metal at the mold parting lines and elsewhere.
EULDLREPAIR	Ladle Repair - The removal and replacement of ladle refractory used to protect the ladle from the heat of the molten metal.
EUPUNBCM	Phenolic Urethane No Bake (PUNB) Coremaking - After sand is heated to promote the reaction, a two-part resin system and a single liquid catalyst is mixed with the sand. After mixing the sand is distributed to the pattern. A release agent to promote core removal may be applied to the pattern prior to forming the core.
EUSHELLCM	Shell Coremaking - Resin coated sand is fed to a pattern that is preheated and coated with a release agent. Heat from the pattern cures the sand mix into the desired shape.

Table 3 – Baghouses and Associated Emission Units

Baghouse ID	Continuous Parameter Monitoring System (CPMS)	Emission Unit ID
SVAB-BH	Differential pressure gauge, baghouse leak detection system (BLDS)	EUCHRGHAND, EUDUCTINOC, EUMLTXFER, EUSHMM, EUEIF1, EUEIF2, EUEIF3, EUEIF4, EULMLPC, EU1230PC
SVC-BH	Differential pressure gauge	EULMLSO, EU1230SO
SVD-BH	Differential pressure gauge	EULMLPC, EU1230PC, EULMLSO, EU1230SO

Baghouse ID	Continuous Parameter Monitoring System (CPMS)	Emission Unit ID
SVE-BH	Differential pressure gauge	EUCHRGHAND, EUSHMM, EULMLSO, EU1230SO
SVF-BH	Differential pressure gauge	EUSHMM
SVG-BH	Differential pressure gauge	EUSHMM
SVHJ-BH	Differential pressure gauge	EUWASTESAND, EUBLAST, EUGRIND, EUCHRGHAND
SVK-BH	Differential pressure gauge	EUCHRGHAND, EULDLREPAIR
SVL-BH	Differential pressure gauge	EUPUNBCM, EUSHELLCM

2.3 Preventive Maintenance and Inspection Schedules [R 336.1911(2)(a-b) and §63.10896(a)(3)]

Table 4 details the inspection and preventive maintenance schedule for all the baghouses listed in Table 3. The Manufacturers Specifications for the baghouses are attached in Appendix A. Any defect or deficiency in the capture system must be repaired as soon as practicable, but no later than 30 calendar days. The date and results of each inspection and the date of repair of any defect or deficiency will be recorded in the Computerized Maintenance Management System (CMMS) and by using the Malfunction Report, located in Appendix B.

Table 4 – Baghouse - Inspection and Preventative Maintenance Schedule (Revised

Frequency	Task
Every Calendar Month	Ductwork • Visual inspections of the system ductwork for leaks, holes, flow constrictions, and accumulated dust Fan • Visual inspection of fan for signs of erosion or fatigue
Every 6 months	Interior of Baghouse • Visual inspections of the interior of the baghouse for structural integrity and to determine the condition of the fabric filter
Every 3 Months	Filter bag • Visual inspection of the cleaned process gas chamber for dust discharge on the slotted wall • Replace defective filter bags
Every 3 Months	Cleaning nozzle connection • Check for ease of motion and, if necessary, replace ball bearings • When cleaning air radial fan in operation: Check for leaks at the cleaning nozzle connection and, if necessary, replace seals
Every 3 Months	Cleaning nozzle sliding lining • Check for abrasion and damage, if possible, in the end position of the cleaning car, and, if necessary, replace • Check distance between slotted wall and cleaning nozzle sliding lining and, if necessary, re-adjust
Every 3 Months	Cleaning car • Check rollers for ease of motion and abrasion and, if necessary, replace • Re-adjust rollers in case of too large clearance
Every 3 Months	Drive station • Check chain wheel for abrasion and, if necessary, replace

Frequency	Task
Every 3 Months	Deflecting station • Check indexing disc for proper functioning
Every 3 Months	Link chain • Check for abrasion and damage and, if necessary, replace • Check chain tension and, if necessary, retighten
Every 3 Months	Traction rope • Check for abrasion and damage and, if necessary, replace

Table 5 details the inspection and maintenance schedule for each emergency generator. The Manufacturers Specifications for the emergency generators are attached in Appendix A.

Table 5 – Emergency Generators - Inspection and Preventative Maintenance Schedule

Frequency	Task
Annually	PM Level 1 Annual Inspection • Sample oil • 72-point inspection To be completed by Michigan CAT or other authorized service provider.
Annually	PM Level 2 Annual Inspection • Sample oil • 72-point inspection • Oil change and oil filter change To be completed by Michigan CAT or other authorized service provider.
Annually	4 Hour Annual Load Bank Test • Load Bank test will apply a load to the generator that will test its overall condition; testing the fuel system, power output, voltage regulation, leaks and overheat condition. Load bank test also removes any wet stacking conditions present. To be completed by Michigan CAT or other authorized service provider, in conjunction with the PM Level 1 or 2 Annual Inspection.

Table 6 details the inspection schedule for each differential pressure gauge listed in Table 3. The Manufacturers Specifications for the differential pressure gauges are attached in Appendix A.

Table 6 – Differential Pressure Gauge - Inspection and Preventative Maintenance Schedule

Frequency	Task
Monthly	Visual inspection of the gauge and pressure lines. Repair any defect or deficiency in the system as soon as practicable.
Annually	Disconnect pressure lines to vent both sides of gauge to atmosphere and re-zero. Recalibration per OEM Manual.

Table 7 details the inspection and preventative maintenance schedule for the baghouse leak detection system (BLDS) on SVAB-BH. The Manufacturers Specifications for the BLDS are attached in Appendix A. [R 336.1911(2)(b) and §63.10896(a)(5)]

Table 7 – BLDS - Inspection and Preventative Maintenance Schedule

Frequency	Task
Monthly	Internal Self Check

Frequency	Task
	• Built-in self-check circuitry is enabled every time the unit is powered up, ensuring the units integrity. • The procedure for this test is to remove the sensing head from the stack, disconnect the probe shaft, power down for a period of 30sec to enable the built-in self-check. While the device is conducting the internal self-check the mA output will be at 5mA, this will last about 30sec. • If the result of the internal self-check fails, then the instrument will fail to 3.8mA and hold this value until rectified (please see fault-finding for possible remedies).
Monthly	Inspection • Visual inspection to ensure that the system is good working order. • As these devices are typically mounted outdoors inspection of cabling, moisture ingress and general condition of the monitor is vital. • Things to look for are: o Moisture ingress into the body of the monitor. o Warn of frayed cabling. o Any burn marks on termination. o Tightening of all screws (terminals, lid, probe shaft etc.) o Particulate build-up on the sensor front end and probe shaft.

2.4 Major Replacement Parts Cost [R 336.1911(2)(a) and §63.10896(a)(4)]

EJF maintains a spare parts inventory for routine and critical equipment and instrumentation. Spare parts and replacement instruments are kept in the EJF maintenance crib. The details the major replacement parts for the proper operation of the baghouses and CPMS, estimated cost of the parts, and quantity to be kept on-hand are kept in the Computerized Maintenance Management System (CMMS). Parts identified as critical to operation of the baghouse or CPMS are stocked in inventory. Minimum quantities will be maintained on-hand.

2.5 Work Order System

Work order requests, concerning repairs to air pollution control equipment or process equipment that can affect air pollution control, can be generated by anyone familiar with the operation of the air pollution control equipment. Irregularities in operations, as evident from routine inspections and preventive maintenance tasks, as presented in Tables 4 through 7, will result in a work order request being generated. The Maintenance Superintendent or Maintenance Supervisors or their designee will assign a level of priority to the work order request.

The Maintenance Superintendent or Maintenance Supervisor or designee then decides on a course of action and assigns resources to resolve the work order in a manner consistent with the requirements this MAP.

2.6 Preventive Maintenance System

To assist in ensuring necessary repairs are addressed as soon as practicable, EJF utilizes a Computerized Maintenance Management System (CMMS) to administer and schedule preventive and corrective maintenance for APC equipment. The CMMS work order system provides:

- Systematic screening and authorization of requested work
- Necessary information for planning and coordinating future work
- Cost information for future planning
- Instructions for management and maintenance personnel in the performance of repairs
- Identification of the equipment that needs to be maintained

- Records of maintenance work performed

The CMMS organizes and manages the frequency based on past operating experience and performance history. EJF updates the information in CMMS based on new operating experience and equipment history. For example, the frequency and scope of specific maintenance task may be modified, in accordance with applicable regulation, if EJF determines that these changes will maintain proper equipment operation in the future.

Tables 4 through 6 present the inspection and preventive maintenance schedule for the APC devices and monitoring equipment that is consistent with any applicable manufacturer's instructions. This schedule is subject to change, following obtaining any necessary approval, if EJF determines that less frequent maintenance is warranted.

3.0 AIR POLLUTION CONTROL DEVICE (APCD) OPERATING VARIABLES [R 336.1911(2)(B)]

Table 9 details the source and air pollution control device operating variables that shall be monitored to detect a malfunction or failure, the normal operating range of these variables, and a description of the method of monitoring or surveillance procedures.

Table 8 – Pressure Gauge Operating Variables

Equipment	Normal Operating Range	Alarm to Sound	Monitoring Frequency	Averaging Periods
Differential pressure gauge on baghouses	< 10.0 inches of water column	> 10.0 inches of water column	Continuous (recorded value is logged once per shift)	N/A

4.0 CORRECTIVE ACTIONS PROGRAM REQUIREMENTS [R 336.1911(2)(C)]

Corrective actions are actions to correct a malfunction.

A malfunction is defined as a sudden or infrequent failure, or failure that is not reasonably preventable, or an event that causes the process to not operate in a normal or usual manner which is not caused in part by poor maintenance or careless operation.

When a malfunction occurs, a Malfunction Report located in Appendix B (or a similar electronic format) will be completed.

4.1 Corrective Action Procedures

When the CPMS or process equipment has a malfunction, the equipment or instrumentation must be repaired or replaced as soon as practicable. If able to do so in a safe manner, the processes equipment must also be shut down until the repairs have been made. The below corrective action procedures must be initiated when visible emissions are observed or a process malfunctions or an operating parameter deviates from the value or range listed in Table 8.

If Visible Emission are Detected - Corrective Action Procedure

1. During the daily visible emission checks, the Environmental and Safety Manager or their designee will conduct a non-certified visual emission reading to determine the baghouse(s) that is (are) malfunctioning, and if visible emissions are observed, they will notify the Maintenance Department and initiate a Malfunction Report.
2. Maintenance will notify the appropriate department to stop the associated process. If Maintenance believes that the malfunction cannot be stopped immediately, consult with the Facility Manager, Environmental and Safety Manager, and FES Environmental to consider immediate shutdown. If it is decided that shutdown is the best option, safety of facility personnel and the protection of assets will take precedence over any air release.
3. If the process is able to be shut down, Maintenance will close/lockout the baghouse(s) that appear to be malfunctioning.
4. Maintenance or their designee will conduct another non-certified visual emission reading to determine if the visible emissions have stopped.
    a. If visible emissions have stopped, Maintenance will initiate corrective actions to fix the malfunction.
    b. If the visible emissions have NOT stopped, Maintenance will conduct a Method 9 visual emission reading (must at least conduct the Method 9 visual emission reading a minimum of ½ hour).
5. Maintenance will conduct the necessary repairs/replacements.
6. Maintenance will notify the appropriate department that the affected process(es) can go back into operation.
7. Maintenance will check to make sure the corrective action was effective and will finish filling out the Malfunction Report for the malfunction.

CPMS Alarm due to a Process Malfunction - Corrective Action Procedure

1. If a CPMS alarms, Maintenance will initiate a Malfunction Report.
2. Maintenance will determine if the alarm is contributed to malfunctioning process equipment or due to malfunctioning CPMS.
3. If due to malfunctioning process equipment; then
    a. Maintenance will notify the appropriate department to stop the associated process. If Maintenance believes that the malfunction cannot be stopped immediately, consult with

the Facility Manager, Environmental and Safety Manager, and FES Environmental to consider immediate shutdown. If it is decided that shutdown is the best option, safety of facility personnel and the protection of assets will take precedence over any air release.

b. Once the process is able to be shut down, Maintenance will close/lockout the baghouse(s) that appear to be malfunctioning.

4. Maintenance will conduct the necessary repairs/replacements.
5. Maintenance will notify the appropriate department that the affected process(es) can go back into operation.
6. Maintenance will check to make sure the corrective action was effective and will finish filling out the Malfunction Report for the malfunction.

CPMS Alarm due to a CPMS Malfunction - Corrective Action Procedure

1. If a CPMS alarms, Maintenance will initiate a Malfunction Report.
2. Maintenance will determine if the alarm is contributed to malfunctioning process equipment or due to malfunctioning CPMS.
3. If due to malfunctioning CPMS; then Maintenance will conduct the necessary repairs/replacements.
4. Maintenance will check to make sure the corrective action was effective and will finish filling out the Malfunction Report for the malfunction.

Follow-up actions should be taken to return operating parameters to levels listed in the Table 8. Follow-up actions should also include measures to prevent the recurrence of deviations from operating parameter values or ranges and a system to record the actions taken to correct the malfunction. The cause of the malfunction, the actions taken during the malfunction, as well as the time the malfunction began and ended, will be recorded on the Malfunction Report provided in Appendix B or electronic submittal.

When the BLDS has a malfunction, in addition to the procedure above, the corrective action procedures must be consistent with the procedures listed in Section 5.6 of this MAP.

5.0 SITE SPECFIC MONITORING PLAN [§63.10896(A)(5)]

This section of the MAP will act as a site-specific monitoring plan for the bag leak detection system. EJF will always operate and maintain each bag leak detection system according to this plan . This site-specific monitoring plan must address all of the following items:

1. Installation of the bag leak detection system.
2. Initial and periodic adjustment of the bag leak detection system including how the alarm set-point will be established.
3. Operation of the bag leak detection system including quality assurance procedures.
4. Maintenance of the bag leak detection system including a routine maintenance schedule and spare parts inventory list.
5. How the bag leak detection system output will be recorded and stored.
6. Procedures for determining what corrective actions are necessary in the event of a bag leak detection alarm.

The baghouse (SVAB-BH) associated with the Electric Induction Furnaces (EIFs) is equipped with a bag leak detection system (BLDS).

5.1 Installation

Each BLDS has been installed according to the manufacturer's specifications included in the Appendix A. The BLDS was carefully selected to ensure that they were appropriate for the type and temperature of the emissions from the EIFs.

5.2 Initial and Periodic Adjustments

The alarm set-point for each BLDS was established following the procedures outlined in the Manufacturer's specifications. Each system is capable of detecting particulate matter emissions at concentrations of 10 milligrams per actual cubic meter (0.0044 grains / actual cubic foot) or less. The initial adjustment of the system included establishing the baseline output and establishing alarm set points. Following the initial adjustment, do not adjust the sensitivity or range, averaging period, alarm set point, or alarm delay time. Except, once per quarter, we may adjust the sensitivity of the bag leak detection system to account for seasonable effects including temperature and humidity

5.3 Operation and Quality Assurance Procedures

Each BLDS is maintained, operated, and inspected according to recommendations from the manufacturer and the manufacturer's specifications. Quality assurance procedures from the manufacturer's specifications are also followed.

5.4 Preventive Maintenance and Spare Parts Inventory

The BLDS is included in the CMMS. This program ensures that all equipment in the facility receives inspections and maintenance at proper intervals to ensure appropriate operation. Details of inspections and PMs performed on the baghouses and the BLDS are listed in Section 2.4 of this plan.

A list of spare parts for the BLDS is kept in the CMMS. The maintenance department is responsible for keeping sufficient spare parts for the facility to minimize production downtime due to equipment failures.

5.5 Recording and Storing Data

The BLDS is connected to a data logger. A data point is collected every 2.5 minutes. This data is summarized into 15-minute block averages.

Data is stored on the facility's main computer system, which is backed up daily.

Table 9 – BLDS Operating Variables

Equipment	Normal Operating Range	Alarm to Sound	Monitoring Frequency	Averaging Periods
Bag leak detection system	0-8	High PM alarm	2.5 minutes	15 minutes

5.6 Corrective Actions for BLDS Alarm

Once a BLDS alarm has been triggered, the facility must initiate corrective action to determine the cause of the alarm within one hour. A corrective action to resolve the problem must be started within at least 24 hours of the alarm and completed no later than 10 calendar days from the date of the alarm. The corrective actions are listed in Section 2.0, for in response to an inspection and in 4.0, for high alarm.

5.6.1 BLDS Alarm Set Point

The bag leak detector, Goyen EMP7 Triboelectric Emission Monitor, is installed according to the manufacturer's recommendations by setting the 4-20mA output to a scale range of 0-8. The alarm set point is then established at two times the maximum or peak output during normal operating conditions.

Observed BLDS readings taken during the compliance test will be included in Appendix C, once initial compliance testing is completed.

5.6.2 BLDS Corrective Actions

During each period the BLDS is out of range a visual and audible electronic alarm will be triggered as well as an electronic alert will be sent to key personnel. Activities that may be enacted to return the BLDS to range include:

1. Determine if instrumentation is in working order
2. Check the baghouse stacks for visible emissions
3. Inspect the baghouse for dislodged or torn bags
4. Perform bag leak check with UV powder and a black light

5.6.3 BLDS Recordkeeping

During each time the BLDS is out of range, the facility shall record the following information using the Malfunction Report in Appendix B:

1. The start date and time identifying when the BLDS was determined to be out of range
2. Determination if the exceedance is due to the BLDS being inoperative or other causes
3. Determination if the exceedance occurred during a startup, shutdown or malfunction
4. The date and time of commencement and completion of each necessary corrective action
5. The end date and time identifying when the BLDS returned to range
6. Nature of the repairs or adjustments to the BLDS.

6.0 PLAN UPDATES AND REVISIONS

6.1 Plan Updates

The MAP will be updated as required for the following reasons:

- Modification to the process or CPMS;
- As required by the permitting agency; or
- A previously unidentified malfunction is identified.

Any time a modification is planned for the EIFs or any of the control devices, instrumentation, or CPMS, an update to the MAP may be required. FES Environmental must be notified to review the proposed modification and to determine its effect on the plan.

Should the permitting agency request an update to the MAP, EJ will initiate the update procedure.

If a previously unidentified malfunction is identified, then the plan is required to be updated within 60 days. These malfunctions will be identified to the Environmental Services Manager on Malfunction Report (Appendix B) or submitted electronically. When such a report is received, FES Environmental will initiate the update procedure.

6.2 Update Procedures

An update to the MAP can be requested from the operating facility, the permitting agency, or the environmental department. The request to update the plan will be forwarded to the Environmental Services Manager. The specific modification requested will be reviewed, along with a justification. A decision will be made to either approve or deny the requested modification.

FES Environmental will then draft the plan modification. A copy of the draft will be distributed to the holders of controlled copies of the plan for comment. After final comments have been received on the draft modifications, FES Environmental will finalize the updates and distribute the Facility Manager and Environmental and Safety Manager to include in the Environmental Management System.

Prior to final distribution of the modified plan, the supervisors in the affected areas will be notified. Training materials will be prepared by the Environmental and Safety Department, which can be used to train operators and other affected personnel on the modifications. This training can be accomplished in several ways, including a handout, a discussion at a monthly department meeting, or a control room posting, depending on the complexity of the modification.

6.3 MAP Retention

The Environmental and Safety Manager will keep the original version of this document and copies will be made available to staff for the life of the foundry operations. If changes are required to this document for any reason, it is the Environmental and Safety Manager's responsibility to update the original document and redistribute accordingly. The original version and each revision will be made accessible for inspection.

When a version of the plan is updated, a copy of the previous version must be kept for a minimum of five years at the facility. This pertains to all past versions.

Appendix A – Manufacturers Specifications

Manufacturer specifications and/or operating manuals for BLDS, Differential Pressure gauges, Baghouses, and Emergency Generators.

GOYEN ONMENTAL SOLUTIONS



EMP7
Particulate Emission Monitor
Installation & Operation Manual

tyco / Flow Control / Environmental Systems

© Copyright by Tyco International Ltd. 2010

This manual is provided as an aid to owners of a Tyco Environmental Systems instrument and contains information proprietary to Tyco Environmental Systems.

This manual may not, in whole or part, be copied, or reproduced without the express written consent of Tyco Environmental Systems.

Goyen Controls Co Pty Ltd & Mecair s.r.l. reserve the right to change product designs and specifications without notice.

Rev1 – Aug 10

GOYEN INNOVATIVE ENVIRONMENTAL SOLUTIONS

EMP7 Installation and Operation Manual

Contents

Health and Safety Information	iii
Design and Manufacturing Standards	iv
Introduction	1
Installation	2
Active Head Installation	4
Specifications	7
Maintenance	8
Purging	10
Options	11
Reference	12
Troubleshooting	16

GOYEN INNOVATIVE ENVIRONMENTAL SOLUTIONS

Tyco Environmental Systems contact details

Australia

Head Office
Goyen Controls Co Pty Ltd
268 Milperra Road
Milperra, NSW 2214

Telephone: 1800 805 372
Facsimile: 1300 658 799

Queensland
Telephone: 1800 805 372
Facsimile: 1300 658 799

Victoria
Telephone: 1800 805 372
Facsimile: 1300 658 799

South Australia
Telephone: 1800 805 372
Facsimile: 1300 658 799

Western Australia
Telephone: 1800 805 372
Facsimile: 1300 658 799

Asia

Goyen Controls Co Pty Ltd
Shanghai Representative Office
1209 Greenland Business Centre
1258 Yu Yuan Road
Shanghai PC200050
CHINA

Telephone: 86 21 5239 8810
Facsimile: 86 21 5239 8812

Goyen Controls Co Pty Ltd
73-M Jalan Mega Mendung
Kompleks Bandar OUG
58200 Kuala Lumpur MALAYSIA

Telephone: 60 37 987 6839
Facsimile: 60 37 987 7839

Office: Singapore
Tel/Facsimile: 65 6457 4549

USA

Goyen Valve Corporation
1195 Airport Road
Lakewood
New Jersey 08701
USA

Telephone: 1 732 364 7800
Facsimile: 1 732 364 1356

Europe

Goyen Controls Co UK Ltd
Unit 3B Beechwood
Chineham Business Park
Basingstoke, Hampshire, RG24 8WA
UNITED KINGDOM

Telephone: 44 1256 817 800
Facsimile: 44 1256 843 164

Tyco Umwelttechnik GmbH
Im Petersfeld 6
D-65624 Altendiez
GERMANY

Telephone: 49 6432 1001/1002
Facsimile: 49 6432 63810

Mecair S.r.l.
Via per Cinisello 97
20054 Nova Milanese
Milano,
ITALY

Telephone: 39 362 375 118
Facsimile: 39 362 375 124

www.cleanairsystems.com

Warning

Use of controls or adjustments or procedures other than those specified in this manual may result in product failure, or poor product performance. You are cautioned that any changes or modifications to the product not expressly approved in this manual could void your product warranty.

Important Note

The EMP7 and all associated products and this manual are subject to continuous development. Contact Tyco Environmental Systems for the latest technical information.

Health and Safety Information

Read this before Operating or Installing the Equipment

Equipment Operation

Use of this instrument in a manner not specified by Goyen may be hazardous.

Electrical Power Supply

Before working on the electrical connections all of the electrical power lines to the equipment must be isolated. All the electrical cables and signal cables must be connected exactly as indicated in these operating instructions. If in doubt contact Tyco Environmental Systems.

Face and Eye Protection

Suitable face and eye protection must be worn when working on hot vessels and ducts!

Special safety measures must be taken when working on a high-pressure duct.

Protective Clothing

Protective clothing must always be worn when working in the vicinity of hot vessels or ducts.

Signs and Symbols Used on Equipment and Documentation



Caution, risk of electric shock.



Caution, attention to possibility of risk of damage to the product, process or surroundings. Refer to instruction manual.

Storage

The instrument should be stored in its packaging, in a dry sheltered area.

Unpacking

Check all packages for external signs of damage. Check the contents against the packing note.

Return of Damaged Goods

IMPORTANT

If any item has been damaged in transit, this should be reported to the carrier and to the supplier immediately. Damage caused in transit is the responsibility of the carrier not the supplier.

DO NOT RETURN a damaged instrument to the sender as the carrier will not then consider a claim. Save the packing with the damaged article for inspection by the carrier.

Return of Goods for Repair

If you need to return goods for repair please contact our Customer Service Department. They will be able to advise you on the correct returns procedure.

Any item returned to Tyco Environmental Systems should be adequately packaged to prevent damage during transit.

You must include a written report of the problem together with your own name and contact information, address, telephone number, email address etc.

Lifting Instructions

Where items are too heavy to be lifted manually, use suitably rated lifting equipment.

Refer to the Technical Specification for weights. All lifting should be done as stated in local regulations.

Design and Manufacturing Standards

Certifications



If applied, these symbols indicate compliance with the EMC directive and the Low Voltage directive (LVD), and with Australian/ New Zealand C-tick standards for EMC emissions and safety, including EN55011:1992, EN5082-2:1995, IEC801-4, IEC1000-4-3, IEC1000-4-2, IEC100-4-4.

Dimensions

All measurements are given in millimetres and inches, unless otherwise stated.

Introduction

This manual contains information relevant to the installation, commissioning and operation of the EMP7 Emission Monitors. EMP7 and all associated products and this manual are subject to continuous development, and it is acknowledged that the manual may contain errors and/or omissions. For the most up-to-date information, including applications information, the user should always refer to Tyco Environmental Systems.

General Description

All suspended dust particles in motion accumulate an electric charge by virtue of the triboelectric effect. The EMP7 is designed to detect the motion of such charges, and therefore to detect, indicate and alarm the relative flow rate of dust in the duct, in the very low concentrations now demanded by newer legislation.

By performing a calibration process, the output signal may be adjusted so that it indicates in any required units, eg mg/s or mg/m^3.

EMP7 is a single unit with wide range logarithmic 4-20mA output only.

The EMP7 head is typically mounted through the wall of a duct carrying the moving particles so that the probe is exposed to the particles. The gas stream often exhausts to atmosphere (such as in a stack), but these emission monitors are equally suited to detecting particles in motion in a gas stream under other conditions, for example pneumatically-conveyed or gravity-fed particles.

Installation

Planning your Installation

Temperature Considerations

Caution

If the insertion temperature is over 200°C (390°F), check with Tyco Environmental Systems to ensure that the equipment, accessories and mounting arrangements are suitable.

Although the probe model is available rated for insertion temperature 200°C (390°F) max, the ambient temperature rating in all cases is 60°C (140°F) max.

When a monitor is mounted in a duct wall, the body of the monitor will tend to rise towards the temperature of the duct wall, and may exceed the 60°C (140°F) ambient temperature rating.

If in doubt, contact Tyco Environmental Systems to ensure that your propose installation is suitable.

Mounting Positions

Choose a mounting position which satisfies these criteria:

In a straight section of metal duct, at least 5 diameters after or 2 diameters before any bend or screen, about 2 diameters before any isokinetic sampling point, at right angles, even further from dampers, fans, away from high vibration, ambient temperature or direct radiation, with probe axis perpendicular to the gas flow.

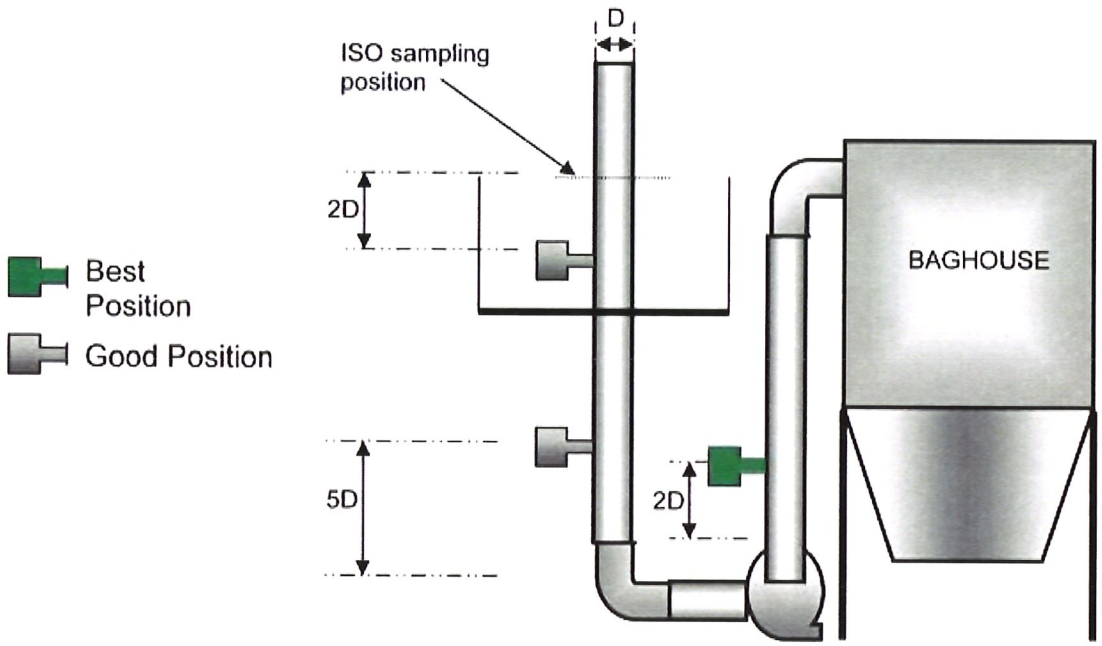

Grounding Of the Duct Material

If possible, replace any insulating material (particularly plastic) which comes into contact with the gas flow, with grounded metal.

Ensure that every part of the duct and all metal exposed to the gas flow (e.g. inspection covers, fan and damper blades, isokinetic probes) are grounded.

Should there be any ungrounded metal or insulating material in contact with the gas stream, ensure that it is electrically screened from the probe (e.g., by an intermediate grounded welded mesh screen).

If in doubt, consult Tyco Environmental Systems.

Particle Moisture

The Active Head should be mounted as far from the moisture source as possible, so that water droplets have evaporated, and the dust surface has dried.

If the humidity is above 80% or unstable, water droplets may appear momentarily, and be detected, increasing errors.

Active Head Installation

Installation Drawing

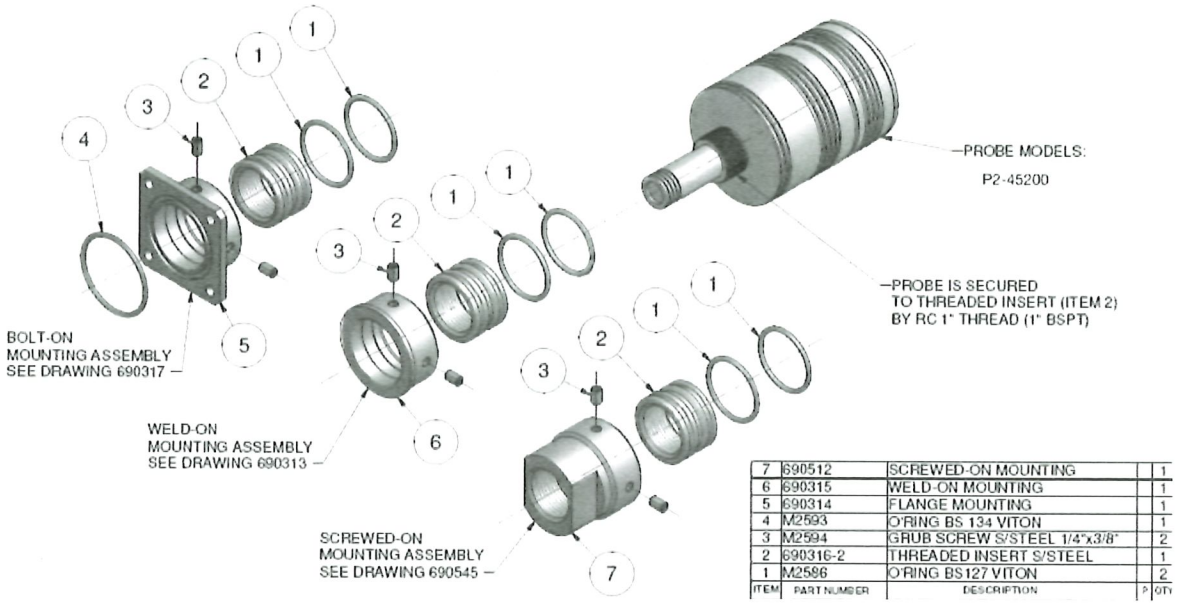

ITEM	PART NUMBER	DESCRIPTION	P	QTY
7	690512	SCREWED-ON MOUNTING		1
6	690315	WELD-ON MOUNTING		1
5	690314	FLANGE MOUNTING		1
4	M2593	O'RING BS 134 VITON		1
3	M2594	GRUB SCREW S/STEEL 1/4"x3/8"		2
2	690316-2	THREADED INSERT S/STEEL		1
1	M2596	O'RING BS127 VITON		2

Installation

Cut a 30mm hole in the duct, and either:

- Weld on a plain 1 inch BSPT female bush (firmly hand-tighten the monitor in the bush),
- Weld on the Weld-on Mount Kit P2-60202-SS; or
- Weld on a flange to suit Bolt-on Mount Kit P2-60203-SS.

Mount barrel on monitor

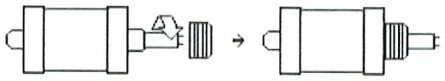

Mount assembly on duct

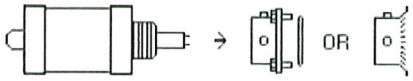

If a mount kit is to be used it will include a metal barrel with a 1 inch BSP thread inside to suit the monitor, and two Viton O-rings outside to seal into the adapter. Screw the monitor firmly into the barrel with the chamfer outwards (see above).

Either bolt the bolt-on adapter P2-60203-SS to the duct (using the supplied Viton O-ring to seal), or weld the weld-on adapter P2-60202-SS to the duct. Then press the Monitor/barrel assembly into the adapter, apply thread sealant to the grub screws and tighten them.

Note: Refer to the Reference section for detailed drawings.

Wiring

EMP7 is a 2 wire 4-20mA transmitter with internal isolation, and may be wired to an analogue input of virtually any process monitor, DCS, PLC, DAQ, SCADA, display or alarm system.

Connect the EMP7 as a 2-wire 4-20mA transmitter according to the documentation for the input system - normally like this:

EMP7 Connection Core to

\+ (positive terminal) Red +24V (analogue input system)
\- (negative terminal) Black 4-20mA Analogue Input (analogue input system)

(Internal earth/drain terminal) n/a do not connect (special applications only)

Internal Lid Earth Stud Screen/drain wire Earth terminal (analogue input system)
External Lid Earth Stud Separate wire Earthed Metalwork (Duct)

Individual screened twisted-pair cable is recommended, but even non-twisted multi-core screened data cable carrying a multitude of unrelated 4-20mA signals has been found to be quite satisfactory. With a 24VDC supply and any of these types of cable, the voltage drop in cable runs up to 6000m will be acceptable.



Caution

All electronic devices may be damaged by the application of excessive voltage. Emission monitors include protection against damage by electrostatic discharge (ESD) however in certain situations the over-voltage energy can exceed the capacity of the protective devices, so precautions are recommended:

The incorrect application of any AC or DC power source to an instrument's terminals, however briefly, will often lead to destruction of the instrument. Only make connections when it is certain they are correct.

In some industrial plants where the earthing is poor or large electrical currents or large magnetic fields are present, or near arc welding, different earth locations may exhibit different potentials, causing instrumentation cabling to carry large currents, burn out and cause a fire.

In addition, non-isolated instrumentation can suffer internal damage from earth potential differences greater than 3.5VRMS or 5V peak. Avoid any possibility of these circumstances, and ensure that arc welding is performed ONLY where the instrument is NOT connected to the to the work piece.

When a cable is not connected to anything, it can carry high induced voltages which, while not necessarily dangerous to humans, are nonetheless dangerous to electronic devices. When such a cable is plugged or wired into the first device, the accumulated energy is discharged into the device. To avoid damage, it is good practice to momentarily discharge any accumulated charge on the cable screen to ground, eg by shorting the two with a multimeter lead.

The human body can accumulate high electrostatic charge while walking or standing next to high voltage electrical equipment. Therefore avoid any electrical contact with the pins on the network header either directly or indirectly via a screwdriver blade. If there is a possibility that electrostatic discharge might occur to the terminals, all care should be taken to ensure no discharge occurs.

Set-up

The 4-20mA output signal is proportional to the logarithm of the emission level.

For applications that only require simple alarm or indicator applications like plant condition monitor, broken bag detector, no special processing is needed.

Where the system is required for applications where calibration is required, while connected to a plant (eg a third-party PLC or SCADA system), a log-to-linear conversion must be performed.

Use the formula

LIN = B X 10^ (LOG/L), where

LIN = desired linear emission signal,

B = base value (eg 0.01mg/m3, adjust to calibrate unit to plant),

LOG = Logarithmic input signal from EMP7, as read by ADC.

L = Log Law (= 0.13 of the maximum possible value of LOG (eg if the max value of LOG is 4095, then L = 0.13x4095 = 532; adjust to trim linearity if needed).

Specifications

Standard Conditions

Ambient Temperature:	-20°C to 60°C (-4°F to 140°F [for electronics])
Vibration:	1G (10m/s2) RMS max continuous, any direction or frequency (with short or separately supported wire rope probe)
Environment:	IP66/NEMA4, ATEX II 3D&G non-corrosive (Aluminium alloy body, stainless steel inserted parts).
Duct Gas Pressure:	100kPa (15 PSI) gauge max
Duct Gas Temperature:	-20°C to 200°C max (-4°F to 390°F) standard models, higher temp to order
Purge Air Pressure:	400kPa (60 PSI) max
Duct Gas Velocity:	5m/s to 30m/s (16 ft/s to 98 ft/s [virtually unlimited with appropriate probe installation])
Particle Size:	0.1µm to 1000µm (wider with some changed characteristics)
Duct Size:	50mm to 10m diameter (2in to 33ft [using the appropriate probe options])
Humidity:	0 to 80% non-condensing
Magnetic Field:	60A/m max at 50Hz (= 50Ampere-Turns in a 1m X 1m square coil)

Mechanical

Purge Air:	RC 1/8 inch or NPT 1/8 purge air connection point is provided. Periodically pulsed purge air may reduce particulate build-up
Probe:	Removable, M8 thread fitting. 300 x 12mm stainless steel rod is standard. Probe length and type in accordance with installation requirements
Probe Options:	Solid rod, tubular, extendable, PTFE coated, tubular ceramic, wear resistant alloys, multiple supports, any length
Dimensions:	88 dia x 125 long (+18 cable gland, +70 probe mount nose)
Mounting:	1 inch male BSPT requires 1 inch female pipe fitting on duct (optional quick disconnect)

Electrical

Power supply:	4-20mA 2-wire 10-32VDC +/-15% after cable and load voltage drops.

Emission Signal

Processing Method:	Impulse Signature Extraction (ISE)
Output Signal Type:	4-20mA Logarithmic.
Resolution Typically:	0.1% of output range (2% of emission level).
Noise Immunity:	All 50Hz or 60Hz and harmonics are effectively removed from the signal before detection. However proper grounding and shielding techniques must be used to avoid mains frequency interference overloading the first amplifier.
Accuracy:	(per year and over specified Temperature range) 4-20mA Output
	Signal (electronics): Zero 0.6% max. Range 0.6% max. Linearity 0.6% max.
	After conversion to linear (electronics): Zero not applicable Range 10% max. Linearity (over 10:1 range) 10% max.
	Overall (typical, including plant): Zero not applicable. Range 20% Linearity over 10:1 signal range 20% untrimmed, 5% trimmed.

All components are high stability, rated for -20°C to +60°C industrial temperature range (no trim pots).

Maintenance

It is desirable to periodically remove, inspect and clean the inserted parts of the Active Head. Maintenance frequency should be determined based on the material characteristics.

After initial installation the Active Head should be removed and inspected weekly then monthly to gain a working knowledge of the interval that would be required for maintenance,

Your local Tyco Environmental Systems office can aid in this process.

Internal Self Check

Built-in self check circuitry is enabled every time the unit is powered up, ensuring the units integrity.

It is recommended that this is done at least once a month for installations that only require plant condition monitoring, systems that are calibrated should conduct this at an interval not exceeding once a week.

The procedure for this test is to remove the sensing head from the stack, disconnect the probe shaft, power down for a period of 30sec to enable the built in self check,. While the device is conducting the internal self check the mA output will be at 5mA, this will last about 30sec.

If the result of the internal self check fails then the instrument will fail to 3.8mA and hold this value until rectified (please see fault-finding for possible remedies).

Inspection

This is a visual inspection to ensure that the system is good working order.

As these devices are typically mounted outdoors inspection of cabling, moisture ingress and general condition of the monitor is vital.

Things to look for are:

- Moisture ingress into the body of the monitor.
- Warn of frayed cabling.
- Any burn marks on termination.
- Tightening of all screws (terminals, lid, probe shaft etc.)
- Particulate build-up on the sensor front end and probe shaft.

Cleaning

Cleaning of the probe is a vital part of the maintenance process to ensure that no bridging occurs between the probe shaft and any grounded material.

Particles can build-up across the probe shaft to the "coat shield" and even to the duct wall, resulting in a LOW reading from the monitor.

To clean the monitor it needs to be removed from the stack and all inserted parts cleaned with compressed air. See image below for components to be cleaned.

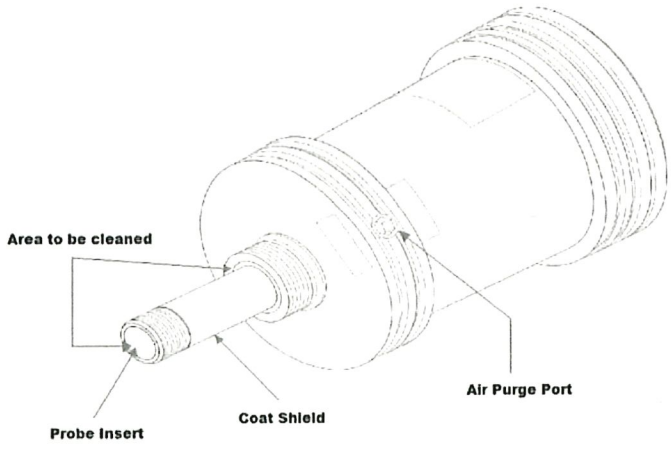

Air purging can help to minimise the frequency of cleaning.

Purging

Particulate Build-up

Particulate build-up on the probe itself can be minimised by the use of PTFE coated probes (consult Tyco Environmental Systems), however build-up on the probe will not cause errors in any case. Build-up across the insulation barrier from the probe to the earthed metalware will, however, progressively attenuate the emission signal, so it should be avoided where possible. A low level alarm can be configured to detect this condition.

Connecting the Purge Air

If build-up across the insulators is considered to be a potential problem, then the purge port must be connected to a source of periodically pulsed clean dry instrument air to dislodge recently deposited particles. The pulsed air will flow as indicated below. NEVER exceed the rated pressure of the purge port (400kPa/60 PSI), or over tighten the air fitting. If the purge facility is not used, the original sealing plug and O-ring must be fitted at all times.

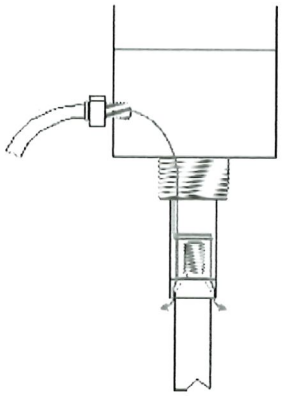

Corrosive Gases

If the gas is corrosive, it should not be allowed to enter the body of the Monitor; in these circumstances the purge air path can be sealed off completely by a plug inserted before the probe is screwed in (please see the supplier).

Options

Probe Options

The Emission Monitor Active Head is widely adjustable; however probe length also has a significant effect on sensitivity, so choose the probe length according to these recommendations:

- Below 1mg/m^3: 0.8 duct diameters
- Above 100mg/m^3: 0.1 duct diameters
- Otherwise: 0.5 duct diameters

Probes are traditionally formed from solid stainless steel rod. However stainless steel wire rope is also available for new models, and is available on request for all other models. Wire rope has a number of advantages over solid rod:

- The surface texture and small diameter minimise downstream gas flow disturbances to flow transmitters, isokinetic sampling probes, etc
- The high internal damping eliminates resonance effects which can damage probes and Emission Monitors
- The inherent sagging minimises the probability of a probe unscrewing itself in operation
- The wire strands slide slightly against each other with normal movement of the probe in the gas stream, which tends to dislodge accumulated matter.

Wire rope probes are commonly fitted in one of these forms:

- Cantilevered probe 0-800mm: use a simple wire rope probe alone.
- Probe 800-2000mm total: supported on opposite side by P2-60230 support head.
- Probe above 2000: string the probe across the duct with egg insulators in line at both ends, and strong supports. Add another short section of stainless steel wire to connect the Emission Monitor to the probe.

Alternatively, consult Tyco Environmental Systems to discuss other probe options including: rigid rod, PTFE coated rod, rod or rope in wear-resistant material.

Temperature Options

The monitor may be mounted via an extension tube such as the high temp kits P2-60205 (300mm) or P2-60210 (450mm). A reflective metal heat shield (eg 400mm dia ss) may be clamped along the extension tube using two nuts on the threaded exterior of the tube.

Provided the gas path is at negative pressure and non-toxic (the usual case for a stack) and the emission monitor body is protected from rain or other contaminants, the monitor may be cooled by drilling several holes around the outermost end of the extension tube, thus allowing ambient air to coat the emission monitor's nose and part of the probe. By these means it is possible to use monitors rated for 200°C (390°F) max insertion temperature at gas temperatures of up to 500°C (P2-60205) or 600°C (P2-60210).

Hazardous Area Options

Please contact you local Tyco Environmental Systems office for information.

Mounting Options

If a quick-release tapping point is required, the Bolt-on Mount Kit P2-60203-SS or the Weld-on Mount Kit P2- 60202-SS. (see page 8) can be used.

Reference

Mounting Assembly Drawings

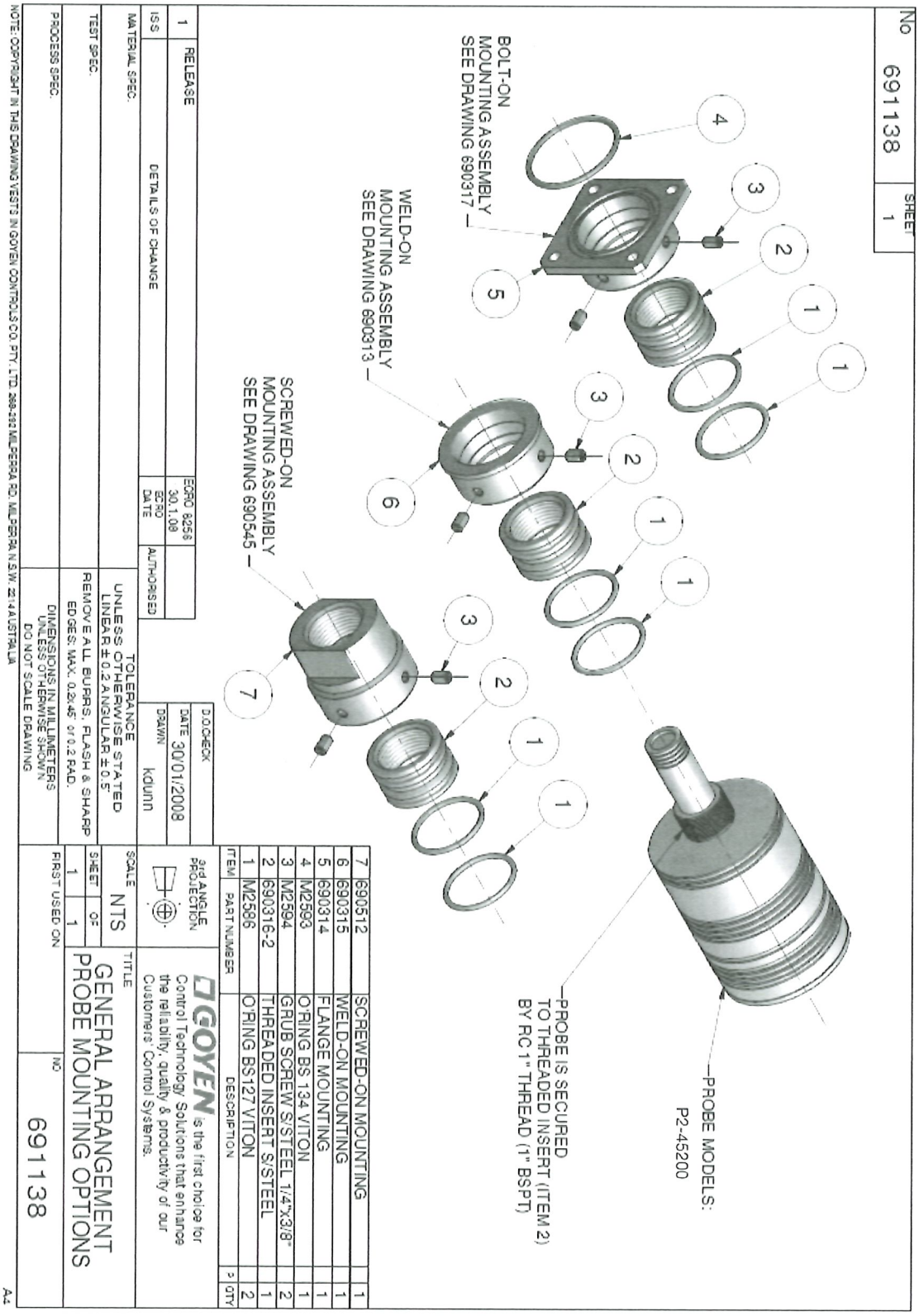

No	SHEET
690317	1

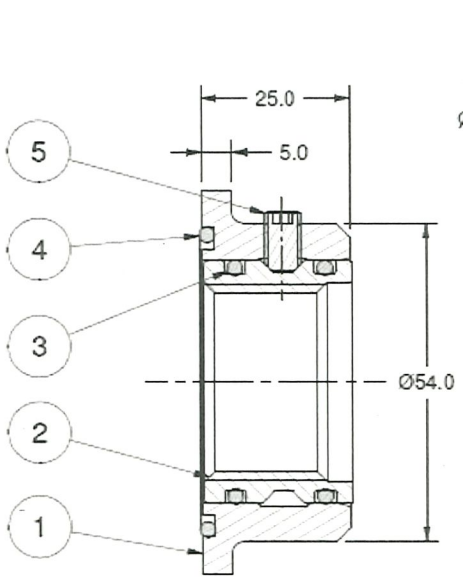

SECTION A-A
SCALE 1:1

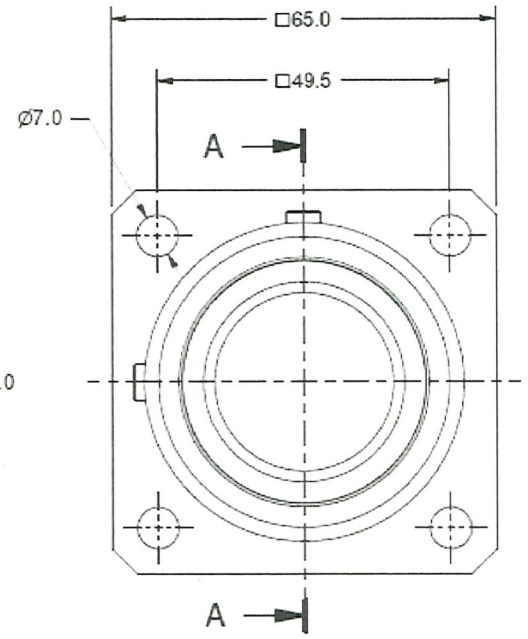

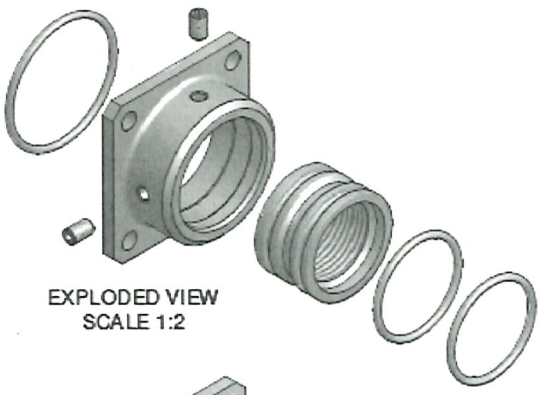

EXPLODED VIEW
SCALE 1:2



ASSEMBLED VIEW
SCALE 1:2

MODEL: P2-60203-SS

ITEM	PART NUMBER	DESCRIPTION	P	QTY
5	M2594	1/4"x3/8" GRUB SCREW S/STEEL		2
4	M2593	O'RING BS134 VITON		1
3	M2586	O'RING BS127 VITON		2
2	690316-2	THREADED INSERT		1
1	690314	FLANGE MOUNTING		1

ISS	DETAILS OF CHANGE	ECRO DATE	AUTHORISED
2	REDRAWN IN INVENTOR 690316-2 WAS 690316	ECRO 8256 16.1.08	
1	PRODUCTION RELEASE	ECRO 4289 15.6.94	RRB

D.O.CHECK
DATE 16/01/2008
DRAWN kdunn

3rd ANGLE PROJECTION

GOYEN is the first choice for Control Technology Solutions that enhance the reliability, quality & productivity of our Customers' Control Systems.

MATERIAL SPEC.

TEST SPEC.

PROCESS SPEC.

TOLERANCE
UNLESS OTHERWISE STATED
LINEAR ± 0.2 ANGULAR ± 0.5°

REMOVE ALL BURRS, FLASH & SHARP EDGES: MAX. 0.2x45° or 0.2 RAD.

DIMENSIONS IN MILLIMETERS
UNLESS OTHERWISE SHOWN
DO NOT SCALE DRAWING

SCALE 1:1

SHEET	OF
1	1

TITLE
BOLT-ON PROBE MOUNTING ASSEMBLY

FIRST USED ON

NO 690317

NOTE: COPYRIGHT IN THIS DRAWING VESTS IN GOYEN CONTROLS CO. PTY. LTD. 268-292 MILPERRA RD. MILPERRA N.S.W. 2214 AUSTRALIA

A4

No	SHEET
690313	1

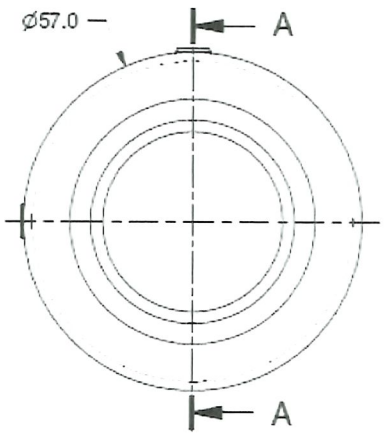

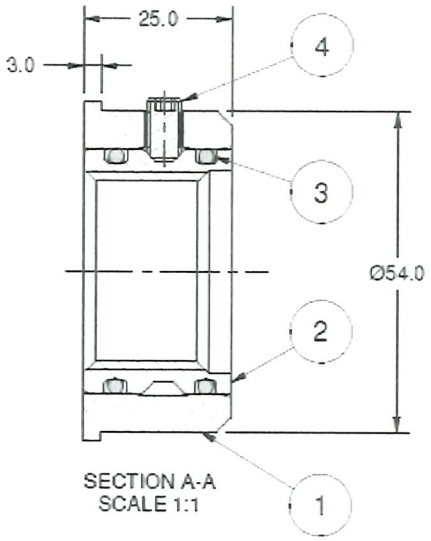

SECTION A-A
SCALE 1:1

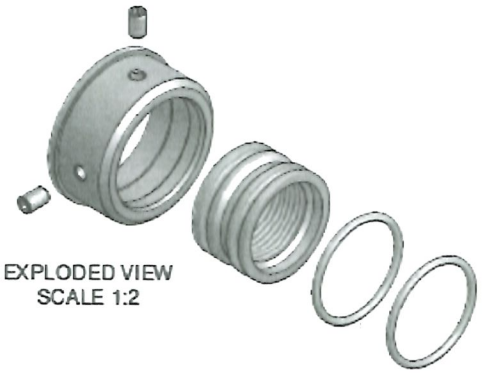

EXPLODED VIEW
SCALE 1:2



ASSEMBLED VIEW
SCALE 1:2

MODEL: P2-60202-SS

ITEM	PART NUMBER	DESCRIPTION	?	QTY
4	M2594	1/4"x3/8" GRUB SCREW S/STEEL		2
3	M2586	O'RING BS127 VITON		2
2	690316-2	THREADED INSERT		1
1	690315	WELD-ON PROBE MOUNTING		1

ISS	DETAILS OF CHANGE	ECRO DATE	AUTHORISED
2	REDRAWN IN INVENTOR 690316-2 WAS 690316	ECRO 8256 16.1.08	
1	PRODUCTION RELEASE	ECRO 4289 16.6.94	RRB

D.O.CHECK
DATE 17/01/2008
DRAWN kdunn

3rd ANGLE PROJECTION

GOYEN is the first choice for Control Technology Solutions that enhance the reliability, quality & productivity of our Customers' Control Systems.

MATERIAL SPEC.

TEST SPEC.

PROCESS SPEC.

TOLERANCE
UNLESS OTHERWISE STATED
LINEAR ± 0.2 ANGULAR ± 0.5°

REMOVE ALL BURRS, FLASH & SHARP EDGES: MAX. 0.2x45° or 0.2 RAD.

DIMENSIONS IN MILLIMETERS
UNLESS OTHERWISE SHOWN
DO NOT SCALE DRAWING

SCALE 1:1

SHEET 1 OF 1

TITLE
WELD-ON PROBE MOUNTING ASSEMBLY

FIRST USED ON

NO 690313

NOTE: COPYRIGHT IN THIS DRAWING VESTS IN GOYEN CONTROLS CO. PTY. LTD. 268-282 MILPERRA RD. MILPERRA N.S.W. 2214 AUSTRALIA

A4

No	SHEET
690545	1

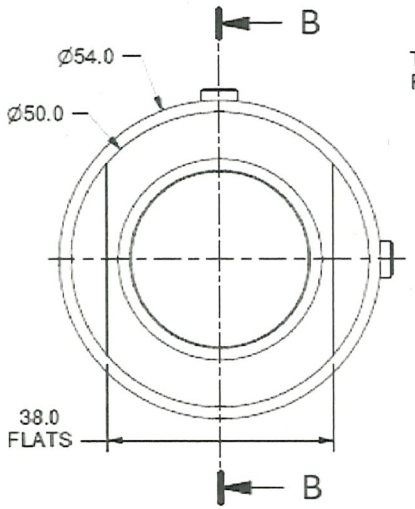

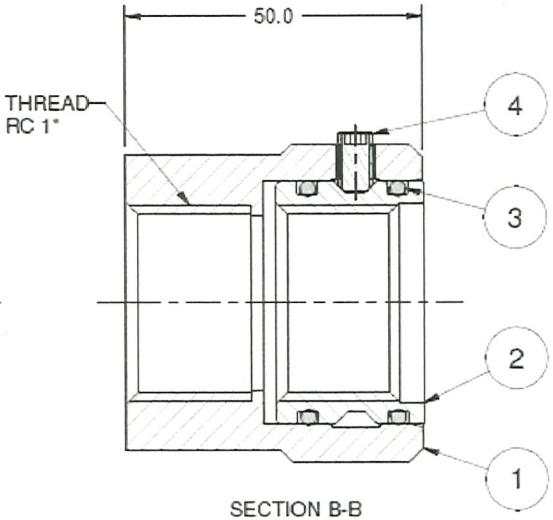

SECTION B-B
SCALE 1:1

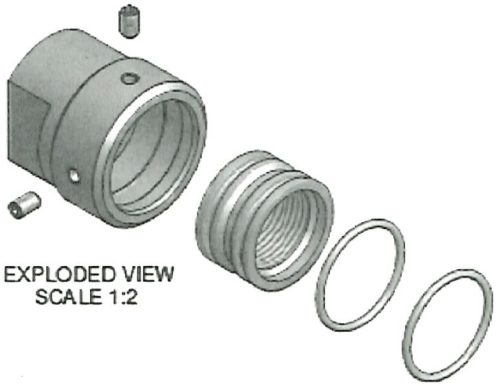

EXPLODED VIEW
SCALE 1:2



ASSEMBLED VIEW
SCALE 1:2

MODEL: P2-60204-SS

ITEM	PART NUMBER	DESCRIPTION	P	QTY
4	M2594	1/4"x3/8" GRUB SCREW S/STEEL		2
3	M2586	O'RING BS127 VITON		2
2	690316-2	THREADED INSERT		1
1	690512	SCREWED-ON COUPLING		1

ISS	DETAILS OF CHANGE	ECRO DATE	AUTHORISED
2	REDRAWN IN INVENTOR 690316-2 WAS 690316	ECRO 8256 16.1.08	
1	PRODUCTION RELEASE	ECRO 5259 19.10.96	RRB

D.O.CHECK
DATE 14/12/2007
DRAWN kdunn

3rd ANGLE PROJECTION

GOYEN is the first choice for Control Technology Solutions that enhance the reliability, quality & productivity of our Customers' Control Systems.

MATERIAL SPEC.

TEST SPEC.

PROCESS SPEC.

TOLERANCE
UNLESS OTHERWISE STATED
LINEAR ± 0.2 ANGULAR ± 0.5°

REMOVE ALL BURRS, FLASH & SHARP EDGES: MAX. 0.2x45° or 0.2 RAD.

DIMENSIONS IN MILLIMETERS
UNLESS OTHERWISE SHOWN
DO NOT SCALE DRAWING

SCALE 1:1

SHEET 1 OF 1

TITLE
SCREWED-ON PROBE MOUNTING ASSEMBLY

FIRST USED ON

NO 690545

NOTE: COPYRIGHT IN THIS DRAWING VESTS IN GOYEN CONTROLS CO. PTY. LTD. 268-292 MILPERRA RD. MILPERRA N.S.W. 2214 AUSTRALIA

A4

Troubleshooting

Problem	Possible Cause/s	Remedy
No Signal	No power to the device	Apply power
	Incorrect input being read in data input device	Ensure that input connections have been made to the correct location
	Probe shaft not connected	Connect probe shaft.
	Bridging of the probe shaft to ground	Probe needs to be cleaned (see maintenance).
Erratic Signal	No earth wire connected	Connect external earthing lug to ground
	Earth potential is above recommendation	Earthing point needs to be improved to eliminate high potential
	Loose connection to probe shaft	Ensure that the probe shaft is tight
	Ambient temperature has exceeded the rating for the monitor/control unit (60°C, 140°F)	Steps need to be taken to ensure the temperature does not exceed the rating, contact Tyco Environmental Systems for further assistance
Device is outputting 3.8mA	Device failed during internal self-check	Remove the probe shaft from the instrument and conduct test again
	Device has failed due to other reason	Probe needs to be cleaned (see maintenance) and conduct test again
		If the above fails to rectify the problem contact Tyco Environmental Systems.
Device showing lower than usual signal	Emissions from the stack have decreased	Actual emissions have decreased no action needs to be taken
	Bridging of the probe shaft to ground	Probe need to be cleaned (see maintenance)
	No probe shaft connected	Ensure probe shaft is connected and tight

If the problem cannot be rectified by following these steps, contact Tyco Environmental Systems.

Notes



tyco / Flow Control / Environmental Systems

Series MS Magnesense® Differential Pressure Transmitter

Specifications - Installation and Operating Instructions





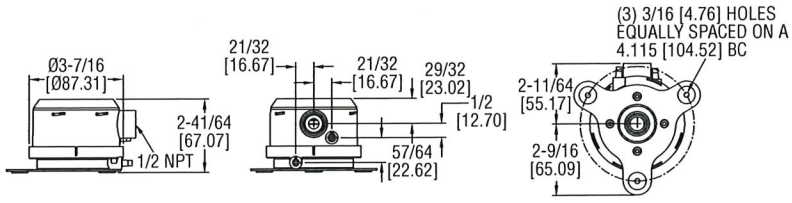

Wall Mount Bracket

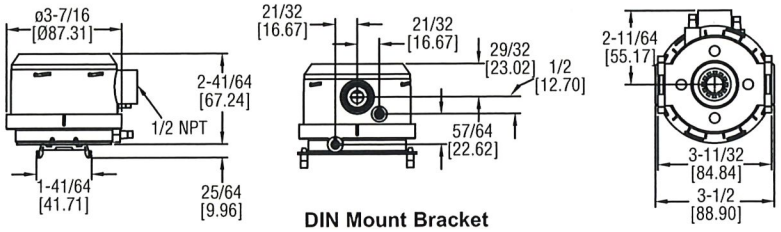

DIN Mount Bracket

The Series MS Magnesense® Differential Pressure Transmitter is an extremely versatile transmitter for monitoring pressure and air velocity. This compact package is loaded with features such as: field selectable English or metric ranges, field upgradeable LCD display and the ability to select a square root output for use with pitot tubes and other similar flow sensors. Also, a single digital push button simultaneously calibrates both zero and span reducing installation and setup time. These features along with exceptional long term performance enables the Magnesense® to be the solution for a myriad of pressure and air flow applications.

INSTALLATION

Mounting:

The transmitter should be mounted on a vertical surface with the connections directed down to prevent moisture from entering either the pressure ports or the electrical cable entry.

Mount the transmitter using #8 x 1/2″ pan head sheet metal screws in the mounting flanges. Do not over tighten.

Electrical Connection:

2-Wire Operation:

⚠ CAUTION DO NOT EXCEED SPECIFIED SUPPLY VOLTAGE RATINGS. PERMANENT DAMAGE NOT COVERED BY WARRANTY WILL RESULT. 2-WIRE UNITS ARE NOT DESIGNED FOR AC VOLTAGE OPERATION.

SPECIFICATIONS

Service: Air and non-combustible, compatible gases.
Wetted Materials: Consult factory.
Accuracy: ±1% @ standard conditions.
Stability: ±1% F.S./ year.
Temperature Limits: 0 to 150°F (-18 to 66°C).
Pressure Limits:
1 psi (6.89 kPa) maximum, operation;
10 psi (68.9 kPa), burst.
Power Requirements:
2-wire, 10 to 35 VDC;
3-wire, 17 to 36 VDC or isolated 21.6 to 33 VAC.
Output Signals:
2-wire, 4 to 20 mA;
3-wire, 0 to 10 V or 0 to 5 V.
Response Time: 300 msec.
Pressure Calibration: One digital push button set both zero & span simultaneously.
Loop Resistance:
Current output: 0 to 1250 ohm max.;
Voltage output: min. load resistance 1 k ohmΩ.
Current Consumption: 40 mA max.
Display (optional): 4 digit LCD.
Electrical Connections:
4 to 20 mA units: 2-wire: European style terminal block for 16 to 26 AWG;
0 to 10 V units: 3-wire: European style terminal block 16 to 22 AWG.
Electrical Entry: 1/2″ NPS thread.
Accessory: A-151 cable gland for 5 to 10 mm diameter cable.
Process Connections: 3/16″ (5 mm) ID tubing. Maximum OD 9 mm.
Enclosure Rating: NEMA 4X (IP65).
Mounting Orientation: Insensitive to mounting orientation.
Weight: 8.0 oz (230 g).
Agency Approval: CE.
The following standards were used for CE approval:
CENELEC EN 61000-4-2: 2001
CENELEC EN 61000-4-3: 2002
CENELEC EN 61000-4-4: 1995
CENELEC EN 61000-4-5: 2001
CENELEC EN 61000-4-6: 2003
CENELEC EN 61000-4-8: 2001
CENELEC EN 55011: 2003
CENELEC EN 61326: 2002
89/336/EED EMC Directive

DWYER INSTRUMENTS, INC.
P.O. Box 373 • Michigan City, IN 46361-0373, U.S.A.
Phone: 219/879-8000 www.dwyer-inst.com
Fax: 219/872-9057 e-mail: info@dwyer-inst.com

Electrical Connection:
2-Wire Operation, continued:

The connections to the transmitter are made through a two circuit European style terminal block CONN6 located at the bottom of the main PCB board. Polarity is indicated by + and – signs on the PCB board. Do not connect to the (V) terminal.

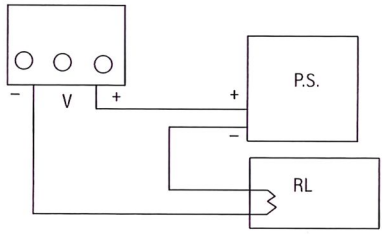

Figure 1

An external power supply delivering 10 to 35 VDC with a minimum current capability of 40 milliamps must be used to power the control loop in which the Magnesense® transmitter is connected. Refer to Fig. 1 for connection of the power supply, transmitter and receiver. The range of appropriate receiver load resistances (R_L) for the power supply voltage available is given by the formula and graph in Fig. 2. Shielded two wire cable is recommended for control loop wiring and the negative side of the loop may be grounded if desired. Note also that the receiver may be connected in either the negative or positive side of the loop, whichever is most convenient. Should polarity of the transmitter or receiver be inadvertently reversed, the loop will not function properly but no damage will be done to the transmitter.

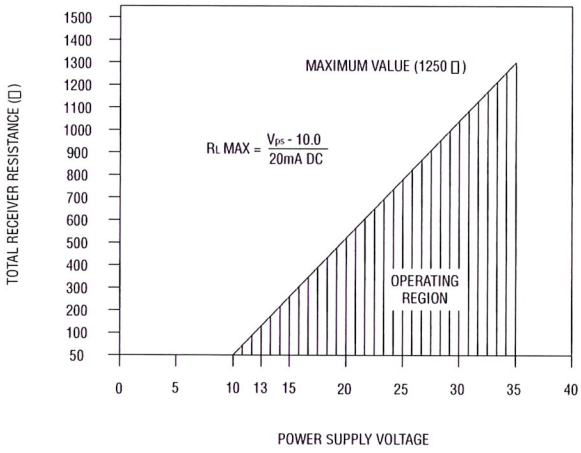

Figure 2

The maximum length of connecting wire between the transmitter and the receiver is a function of wire size and receiver resistance. That portion of the total current loop resistance represented by the resistance of the connecting wires themselves should not exceed 10% of the receiver resistance. For extremely long runs (over 1,000 feet), it is desirable to select receivers with higher resistances in order to keep the size and cost of the connecting leads as low as possible. In installations where the connecting run is no more than 100 feet, connecting lead wire as small as No. 22 Ga. can be used.

3-Wire Operation:

⚠ CAUTION DO NOT EXCEED SPECIFIED SUPPLY VOLTAGE RATINGS. PERMANENT DAMAGE NOT COVERED BY WARRANTY WILL RESULT.

The connections to the transmitter are made through a three circuit European style terminal block. Connect the power and signal leads to the corresponding terminals as shown in Fig. 3. When using a DC supply, the positive of the supply should be connected to (+) and the negative connected to (-). Connecting the leads in reverse will not damage the device but it will not operate. The DC supply should be capable of providing 20 mA or more of current per Magnesense® transmitter.

When using an isolated AC supply, either leads of the supply may be connected to (-) and (+). The input diode of the device half wave rectifies and filters the applied AC voltage. A small DC current of less than 20 mA is thus drawn through the transformer. The transformer used for the AC supply must be capable of handling this small DC current. Use a UL 1584 Class 2 rated transformer rated between 24 V and 30 VAC, 40 VA or larger, 50/60 Hz. UL 1584 Class 2 rated transformers are limited to 30 VAC maximum under any conditions at nominal line. The AC input voltage to the device is thus limited to a minimum of 21.6 at low line (24 V-10%) and 33 V at high line (30 V+10%).

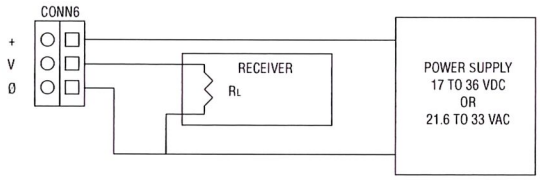

Figure 3

The output of (V) is 0 to 5 VDC or 10 VDC depending on model. As much as 10 mA may be drawn from (V) without affecting accuracy. This limits the minimum load RL connected to Vo to 1 KΩ or higher. Remember to keep the wiring resistance between the output and the receiver R_L low compared to value of R_L. While the voltage at the terminals remains unchanged with a 10 mA current flow, resistive losses in the wiring do cause errors in the voltage delivered to R_L. For a 1% accurate gauge, a good rule of thumb would be to keep the resist 0.1% of the value of R_L. This will keep the error caused by current flow below 0.1%.

To minimize noise in the signal use shielded cable. The common line may also be grounded.

Pressure Connections

Two integral tubing connectors are provided. They are designed to fit 3/16″ (5 mm) ID tubing. Connect the high pressure to the High side as shown in Fig. 4. Be sure the pressure ratings of the tubing exceed that of the operating ranges.

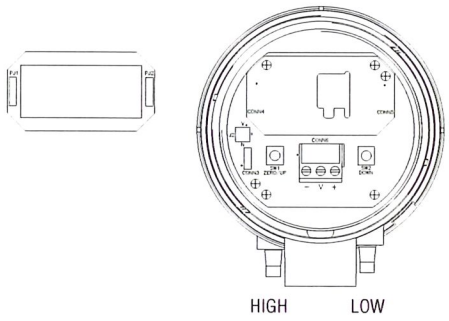

Figure 4

Select Operation Mode:
The operating modes and ranges are controlled by a shorting jumper on jumper block J2. This jumper block is shown in Fig. 5.

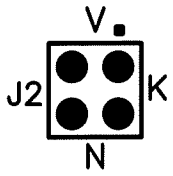

Figure 5: Mode Programming Jumpers

Jumper block J2 primary function is to control the operating mode. There are two operating modes, Normal and Velocity. The Normal operating mode provides for zero pressure to correspond to 0 V or 4 mA output. This mode is selected by placing the supplied shorting jumper for J2 on the pins next to the letter "N". The jumper for J2 is factory installed to the Normal mode. If no jumper is installed on J2, the device defaults to the "N" selection.

The Velocity mode provides the ability for the unit in conjunction with a pitot tube or similar flow sensor with known K factor to give a direct output in air velocity. This mode is selected by placing the supplied shorting jumper for J2 on the pins next to the letter "V". If the optional display is present, this mode prompts the display to read in air velocity. The current or voltage output is modified such that full scale output is 4004* K* $\sqrt{(\Delta P)}$ feet per minute or its metric equivalent in meters per second depending upon which units are selected. The factory programming for the K factor is 1.00 but may be adjusted (see Adjust K Factor). The velocity displayed for the various models can be found in Table 1a, 1b, and 1c.

Standard Velocity Displayed		
Model	**English**	**Metric**
MS-X3X	K* 12.66 x 1000 fpm	K* 57.7 m/s
MS-X4X	K* 15.51 x 1000 fpm	K* 70.7 m/s
MX-X5X	K* 20.02 x 1000 fpm	K* 91.2 m/s

Table 1a

SETUP
Set Measurement Units:
Standard Magnesense® transmitters can be easily set to operate in either English or metric units.

The programming jumper is CONN3. A representation of this jumper is shown in Fig. 6. English units are selected by placing the provided shorting jumper on the lower two pins of the block. Metric units are selected by placing the provided shorting jumper on the upper two pins of the block. If no jumper is present English units are selected by default.

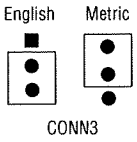

Figure 6a: Measurement Units Programming Jumper

In addition to the obvious change in the scale of the LCD display, the full scale range and corresponding analog outputs are also affected by the measurement units selection. The analog output goes to full scale output (5 volts, 10 volts or 20 mA depending on model) of the selected range and units. See Table 2.

FULL SCALE ANALOG OUTPUT

Model	English	Metric
MS-X31	10 in w.c.	2 kPa
MS-X41	15 in w.c.	3 kPa
MX-X51	25 in w.c.	5 kPa

Table 2

Install Optional Display:
The A-435 LCD conversion kit allows any non display model to have the LCD added at a later time. The kit contains an LCD display and replacement cover with LCD window. The optional display may be set to read pressure either in Inches Water Column or Kilopascal. The optional display can be also set to display air velocity in X1000 feet per minute or meters per second when used with a pitot tube or similar flow sensor with a known K factor.

The optional display for the Magnesense® is mounted on the main board by connectors CONN4 and CONN5. The display is properly mounted when CONN4 and CONN5 on the display are connected to the corresponding CONN4 and CONN5 on the main board. See Fig. 4. Installing the display upside down causes no harm the display or the main board. The display just simply reads upside down.

Label (Included with display):
The optional LCD display does not contain engineering unit indication. So that the display may be appropriately marked, four adhesive labels have been provided with the units. The unit labels are INWC, kPa, X1000 fpm, and M/S. Attach the appropriate provided units label above the display window on the cover of the device to indicate to which units the display has been set.

Adjust K Factor:
If the optional display is present, the K factor used in velocity measurements may be adjusted. This is done by activating the K factor adjustment function of the unit. To activate the K factor adjustment function, take the shorting jumper from programming block J2 and place it on the upper two terminals next to the letter "K". See Fig. 5. The display will now show the programmed pitot tube K factor. The K factor can be adjusted up and down by using the up and down buttons as up and down buttons. Once the desired K factor has been set, replace the shorting jumper on J2 to its velocity position ("V"). The shorting jumper must not be left in the "K" position for proper operation of the unit. The factory setting for the K factor is 1.0 and it is adjustable from 0.1 to 4.0.

One button pressure calibration – Leaving the hose barbs vented, press and hold the "Zero/Up" switch for about 4 to 5 seconds. The zero point should now be set and if the display is present, the display will read zero. Span is also simultaneously adjusted at the time the zero is set. No further calibration is required. It does not matter if in metric or English unit made when performing this "one button" calibration of both zero & span.

DJE/DJM MODELS
Magnesense® transmitters having the -DJE or -DJM option are configurable to show velocity in two different formats. CONN3 selects the number of decimal places displayed in velocity mode as shown in Figure 6b.

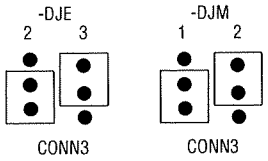

Figure 6b: Velocity Decimal Place Jumper

MAINTENANCE

Annual recalibration is suggested. No lubrication or other periodic servicing is required. Keep exterior and cover clean. Occasionally disconnect pressure lines to vent both sides of gauge to atmosphere and re-zero. Do not use solvent to clean transmitter. Use only plastic compatible cleaners or water.

The Series MS is not field serviceable and should be returned if repair is needed (field repair should not be attempted and may void warranty). Be sure to include a brief description of the problem plus any relevant application notes. Contact customer service to receive a return goods authorization number before shipping.

©Copyright 2011 Dwyer Instruments, Inc.

Printed in U.S.A. 2/11

FR-# 01-443337-20 Rev.4

DWYER INSTRUMENTS, INC.
P.O. Box 373 • Michigan City, IN 46361-0373, U.S.A.

Phone: 219/879-8000
Fax: 219/872-9057

www.dwyer-inst.com
e-mail: info@dwyer-inst.com

MIKROPUL

Nederman

Assembly and operating manual for partly completed machines/plants

PLANT NO.: P01411

PROJECT NO.: P01411-01

CUSTOMER: MikroPul LLC/Pneumafil LLC
PROJECT: East Jordan Foundry LLC

Translation of the original operating manual

Date of issue: 18.09.2017 Name: Jürgen Steinebrunner

Date of revision: Name:

© Copyright 2005 - 2017 Nederman MikroPul GmbH
All rights, including translation, reserved.
No part of the documentation, may be reproduced, processed on electronic eqiupment, photocopied or distributed in any form (printed, copied, microfilmed or with any other process) without the prior written consent ot Nederman MikroPul GmbH.

Assembly and operating manual

MIKROPUL
Nederman

Contents

1 Information and technical data
2 Safety
3 General
4 Transport and storage
5 Descriptions
6 not relevant
7 Assembly
8 not relevant
9 Troubleshooting
10 Maintenance
11 Spare parts stock and after-sales service
12 Supplier's documentation

1 Information and technical data

Content

1.1 Supplier
1.2 Manufacturer
1.3 Plant-No.
1.4 Project-No.
1.5 Designation/Type
1.6 Year of construction
1.7 Field of application

1.7.1 Intended use

1.8 Technical data
1.9 Warranty of emission

1.9.1 Dusty emissions

1.10 Declaration of Incorporation of Partly Completed Machinery

1.1 Supplier

Nederman MikroPul GmbH
Industriestraße 9 D-77948 Friesenheim
P.O. Box 27 D-77944 Friesenheim
✆ : +49 (0)7821 / 966-0
Fax : +49 (0)7821 / 966-245

1.2 Manufacturer

Nederman Filtration GmbH
Industriestraße 9 D-77948 Friesenheim
P.O. Box 27 D-77944 Friesenheim
✆ : +49 (0)7821 / 966-0
Fax : +49 (0)7821 / 966-245

1.3 Plant no.

P01411

1.4 Project no.

P01411-01

1.5 Designation/Type

Flat bag filter FS722/11.00/1540 (1540)

1.6 Year of construction

2017

1.7 Field of application

Induction Furnace

1.7.1 Intended use

The plant is intended exclusively for cleaning air laden with dust and/or noxious substances and non-explosive dusts.



Any other or additional use is deemed to be improper.

Conforming use also includes the following points:

- **Compliance with the maintenance instructions (see section 10).**
- **No modification of any part of the complete plant without the prior written consent of Nederman MikroPul GmbH.**

Liability for damage and losses resulting from non-conforming use of the plant rests exclusively with the owner/operator of the plant.

In addition, non-compliance with the plant's conforming use will result in the following consequences:

- **Warranty will cease to be valid**
- **The declarations of incorporation of partly completed machinery will likewise cease to be valid**

1.8 Technical data

Volume flow	142 800 m³/h i.A.
Operating temperature of the volume	46 °C
Filter medium	synthetic fibre
Overall installed filtering area	2 310 m²
Effective filtering area	2 184 m²
Connected load of all drives	approx. 6 kW

1.9 Warranty of emission

1.9.1 Dusty emissions

The residual dust content of the cleaned gas is max. 0.001 grains/dscf. Measured by EPA Method 5D Dry Portion.

Assuming correct operation of the entire plant.



Verification of the residual dust values:
The proof of keeping the required values of residual dust content of the delivered plant can only be carried out by an authorised measuring institute. Usually, this can't be done earlier than four weeks after commissioning (1-shift operation), as at this time a sufficient saturation level of the filter bags is reached.

This has to be arranged by you. Before this measurement you need to inform us in order to give us sufficient time and opportunity to check the plant, at least two weeks beforehand of the date of the measurement.

1.10 Declaration of Incorporation of Partly Completed Machinery

Nederman

Declaration of Incorporation of Partly Completed Machinery in accordance with Directive 2006/42/EC, Annex II B

The manufacturer

Nederman Filtration GmbH
Industriestr. 9
D - 77948 Friesenheim
✆ +49 (0)7821 / 966-0

herewith declares that the following partly completed machinery:

Product:	Cassette-type filter
Type:	FS 722/11,00/1540 (1540)
Plant No.:	P01411
Project No.:	P01411-01
Year of construction:	2017

complies with the fundamental safety and health requirements of the aforementioned Directives as stipulated in Annex I.

The partly completed machinery complies with the relevant provisions of the following other Directives – including their amendments in force at the time of issuing this Declaration:

- 2004/108/EC Electromagnetic Compatibility

The partly completed machinery must not be put into service until the final machinery / plant into which the aforementioned partly completed machinery has been incorporated has been declared in conformity with the Directive 2006/42/EC.

The following harmonized standards have been applied:

- DIN EN ISO 12100:2011-03, Safety of machinery
- DIN EN ISO 13849-1:2016-06, Safety-related parts of control systems
- DIN EN 60 204-1:2014-10, Electrical equipment in machines

The manufacturer undertakes to electronically transmit the specific documents relating to the partly completed machinery to the national authorities on demand.

The specific technical documents relating to the partly completed machinery as stipulated in Annex VII Part B have been compiled.

Authorized person responsible for documentation:

Nederman Filtration GmbH Department Documentation ✆: +49 (0)7821 / 966-207

Signatory

Place of issue: Friesenheim

Date of issue: 2017-09-18

Name and function of the signatory: Detlef Stark, Managing director

Signature:

Nederman

Declaration of Incorporation of Partly Completed Machinery in accordance with Directive 2006/42/EC, Annex II B

The manufacturer

Nederman Filtration GmbH
Industriestr. 9
D - 77948 Friesenheim
✆ +49 (0)7821 / 966-0

herewith declares that the following partly completed machinery:

Product:	Cleaning air damper - motor operated
Plant No.:	P01411
Project No.:	P01411-01
Year of construction:	2017

complies with the fundamental safety and health requirements of the aforementioned Directives as stipulated in Annex I.

The partly completed machinery complies with the relevant provisions of the following other Directives – including their amendments in force at the time of issuing this Declaration:

- 2004/108/EC Electromagnetic Compatibility

The partly completed machinery must not be put into service until the final machinery / plant into which the aforementioned partly completed machinery has been incorporated has been declared in conformity with the Directive 2006/42/EC.

The following harmonized standards have been applied:

- DIN EN ISO 12100:2011-03, Safety of machinery
- DIN EN ISO 13849-1:2016-06, Safety-related parts of control systems
- DIN EN 60 204-1:2014-10, Electrical equipment in machines

The manufacturer undertakes to electronically transmit the specific documents relating to the partly completed machinery to the national authorities on demand.

The specific technical documents relating to the partly completed machinery as stipulated in Annex VII Part B have been compiled.

Authorized person responsible for documentation:

Nederman Filtration GmbH Department Documentation ✆: +49 (0)7821 / 966-207

Signatory

Place of issue: Friesenheim

Date of issue: 2017-09-18

Name and function of the signatory: Detlef Stark, Managing director

Signature:

2 Safety

Contents

2.1 Introduction
2.2 Explanation of symbols and instructions

2.2.1 Working safety symbol
2.2.2 Warning sign
2.2.3 Instruction symbol

2.3 Target groups
2.4 Description of the target groups
2.5 Risks
2.6 Notes on safety

2.6.1 General notes on safety

2.6.1.1 Activation ban

2.6.2 Notes on safety before initial commissioning
2.6.3 Notes on safety during operation
2.6.4 Notes on safety during maintenance
2.6.5 Troubleshooting with the power supply switched on

2.7 Technical components of the safety system

2.7.1 Protective facilities
2.7.2 Signs

2.8 Operation and maintenance by several people
2.9 Inspection and maintenance of the safety system

2.9.1 Daily checks

2.10 Tasks of the works management

2.10.1 Organizational measures
2.10.2 Staff selection and qualifications
2.10.3 Electrical equipment

2.11 Fire protection

2.11.1 Preventive fire protection
2.11.2 Defensive fire protection – organizational measures
2.11.3 Fire classes according to DIN EN 2
2.11.4 Action in the event of fire

2.11.4.1 Plant
2.11.4.2 Residual material

2.1 Introduction

The machine/plant is manufactured to the state of the art according to the safety specifications of the EU, which are current at the time of delivery and built according to the BGV (Occupational Health and Safety Regulations of the trade associations). At locations outside Germany, the corresponding regulations in the respective country must be observed!

However, during operation risks to life and limb of the user or third parties or damage to the machine/plant and other valuable equipment may arise if the machine/plant is used improperly or not for its intended purpose or is operated by unskilled personnel. Therefore, one of the most important safety measures and obligations of the operator is to inform and train the staff working on machine/plant.

Warning!

The machine/plant may only be used in perfect working order, properly (see section 1), with an awareness of safety and risks and the assembly and/or operating manual must be observed! In particular faults which could reduce safety must be remedied immediately!

In order to preclude accidents and damage, danger areas were avoided as far as possible in the design of the machine/plant. The remaining danger zones are safeguarded in two ways:

- by mechanical protective facilities such as covers, cordons etc.
- by warning devices, such as signs etc.

In addition to general information on the safety system, the following points in this section provide special references to risks which only occur under special circumstances and cannot be readily recognized.

To ensure the safe handling of the machine/plant, it is therefore imperative for everyone involved in commissioning, operation or maintenance work on the machine/plant to have read this section as well as the maintenance instructions (see section 10) before starting work.

In addition, the generally applicable statutory and other regulations on accident prevention and environmental protection are to be observed and instruction on them given! Such obligations may also relate, for example, to the handling of hazardous substances or the provision/wearing of personal protective equipment or to road traffic regulations.

The staff charged with work on the machine/plant must have read the notes on safety and the operating and maintenance instructions before starting work. It is too late to do so during the actual work. This applies in particular to staff who only work on the machine/plant occasionally.

A copy of this assembly and/or operating manual should always be kept in the vicinity of the machine/plant so that it can be consulted immediately as and when required.

As no liability is assumed for any damage which occurs as a result of the non-observance of the safety notes and the maintenance regulations (see section 10), the operator must ensure that the operating and maintenance staff know this assembly and/or operating manual and also follow the notes, recommendations and regulations contained in it. In addition to the instructions in the following safety regulations, the national and local safety and accident prevention regulations are to be observed.

During the assembly and commissioning of the machine/plant Nederman MikroPul GmbH organizes training courses for the operating and maintenance staff which also deal with the safety system.

During operation of the machine/plant it is necessary to undertake a check patrol at least once per week involving a general inspection of the entire machine/plant. The machine/plant is to be checked for external damage and deficiencies. Any changes (including the operating behaviour) are to be reported to the office/person responsible without delay. If necessary, shut down the machine/plant and secure.



The power input of the drive motors of the radial fans is 6-8 times higher than the admissible rated current during the running-up phase. Should the power input remain higher than indicated on the motor nameplate after the running-up phase of the radial fans, throttling in the piping system must be carried out using the throttle or butterfly valves.

2.2 Explanations of symbols and instructions

2.2.1 Work safety symbol



You will find this symbol beside all notes on work safety in this assembly and/or operating manual where there is a risk to life and limb.

Observe these notes and take particular care in these cases.

Please advise other users of all the notes on work safety, too.

Apart from the instructions in this assembly and/or operating manual, the general safety and accident prevention regulations must be followed.

2.2.2 Warning sign

Warning!

This sign is to be found at those points in this assembly and/or operating manual which deserve your special attention to ensure that the guidelines, regulations, instructions and the correct work procedures are observed and that damage to machine/plant components is prevented.

2.2.3 Instruction symbol



You will find this symbol beside all instructions which provide you with important information.

2.3 Target groups

Target group	Task
Owner	➔ This operating manual must be accessible to personnel at all times. ➔ Instruct the personnel to read and comply with the operating manual, especially the safety instructions and warnings.
Operators, technical personnel, electricians, duly instructed persons	➔ Read, observe and comply with the operating manual, especially the safety instructions and warnings.

2.4 Description of the target groups

Target group	Task
Owner	➔ The owner (business person/company) is defined as being the party operating the machine/plant and using it in conformity with its intended purpose or ordering suitable and instructed persons to operate it on their behalf.
Operators	➔ Operators are defined as the persons instructed to operate the machine/plant by its owner.
Technical personnel	➔ Technical personnel comprise anyone to whom special tasks, such as servicing and troubleshooting, have been entrusted by the owner and who has been trained by us.
Electricians	➔ An electrician is defined as being anyone who, on the basis of their professional qualifications, has experience of electrical machine/plant, is familiar with the relevant standards in force and can not only assess and carry out the assigned tasks, but also recognize and avert potential hazards.
Duly instructed persons	➔ A duly instructed person is defined as being anyone who has been instructed with regard to their assigned tasks and the hazards potentially associated with inappropriate conduct, and who has been instructed with regard to the required safety facilities, safety measures, relevant regulations, accident prevention regulations and operating conditions, and who has proved their aptitude.

2.5 Risks

The machine/plant is in line with the state of the art and are operationally safe. They are designed so that risks only arise from strictly limited areas which are largely safeguarded by safety circuits and protective facilities and indicated by warning signs.



It is strictly forbidden to operate the machine/plant without protective facilities as this can result in serious accidents.

However, it must be assumed that moving parts of the machine/plant always represent a potential source of risk (e.g. shearing, pinching or impact points).

If protective facilities, cordons or covers have to be removed for maintenance, repair or setting work, the machine/plant must be moved into a position where the risks emanating from the moving parts of the machine/plant are minimized in order to protect the staff working on the machine/plant. This position, which is of major importance for preventing accidents, is termed the **DISCONNECTION OF THE PLANT**.

In this connection it should be pointed out that faults in the control of the machine/plant may result in unforeseeable movements which deviate from the normal process flow. Even if the work sequence is known precisely, work on or in the immediate vicinity of the machine/plant is only permitted when it has been disconnected and isolated from the power supply.

It must also be noted that some safety circuits which are enabled in the automatic mode are not active in the manual mode. In order to achieve as high a safety standard as possible in this mode, **only one single** person must use the manual control element(s) in manual mode. This person assumes responsibility during this period and he must check, after switching over to manual mode, that there is no one in a danger zone before he initiates plant movements (section 2.6.5 "Troubleshooting with the power supply switched on" is to be observed).

2.6 Notes on safety

2.6.1 General notes on safety



Irrespective of the following notes, the national and local safety and accident prevention regulations always apply to the operation of the machine/plant.



All protective action in accordance with the VDE standards must be observed!



During work with suspended loads no one must enter the relevant danger area. A clearly visible sign "**Do not walk under suspended load**" must be put up and the person responsible must monitor or cordon off the danger area. Appropriate instructions must also be clearly visible.



If necessary or stipulated in regulations, wear personal protective equipment.



Observe all notes on safety and risks relating to the machine/plant.



In the event of modifications to the machine/plant relevant to safety or changes in its operating behaviour, shut down the machine/plant immediately and report the fault to the office/person responsible.



Provide information on the location and operation of fire extinguishers.



Observe fire alarm and fire-fighting procedures.



Work on the electrical equipment of the machine/plant may only be performed by a qualified electrician or trained personnel under the charge and supervision of a qualified electrician in accordance with electrical engineering regulations.



Any action which could reduce safety is prohibited!



Noise abatement features on the machine/plant must be in their protective positions during operation.



Wear the prescribed personal ear protection equipment!



When handling oils, greases and other chemical substances, observe the safety regulations applicable to the product in question!



Take care when handling hot process materials (risk of burns or scalds), for example when changing the oil of gear motors!

2.6.1.1 ACTIVATION BAN!



The radial fans must not be switched on, not even as a test, unless the intake and discharge openings are closed with piping, suitable grids or steel sheet covers.

Warning!

The fans must run in the direction of the arrows.

Inadvertent and unthrottled start-up can cause motor damage or the motor protection switches will be triggered by the start-up current being supplied for too long before the nominal speed is reached.

Bearing damage may occur if the bearings are not filled with an adequate amount of grease (see section 10).

2.6.2 Notes on safety before initial commissioning

Warning!

Before initial commissioning of the electrical equipment, all screws inside the control cabinet must be checked and retightened, if necessary.



Before initial commissioning of the machine/plant and after repair and maintenance work, the following points are to be observed:

- Check all functions/controls/elements of the machine/plant.
- The sense of rotation of the running impeller is to be verified by a short actuation of the key button "Installation ON" and following visual control of the running direction of the V-belt of the radial fan. The direction of rotation of the impeller has to correspond to the given direction of the arrow.

2.6.3 Notes on safety during operation

The machine/plant is to be checked at least once per week for external damage and faults. Any changes which have occurred (including the operating behaviour) are to be reported to the office/person responsible without delay. If necessary, shut down the machine/plant immediately and secure!

To this end the operating personnel must tour the entire machine/plant in order to make sure that all the cordons and covers are in their proper positions and are operable.

In addition, all Emergency OFF buttons must be checked to ensure they function correctly.

If it is discovered during this inspection patrol that faults have occurred or parts are missing or damaged, the maintenance staff must be notified without delay. Only after all the missing parts have been replaced and all the faults remedied may the machine/plant be switched on.

Before the machine/plant is switched on, it must be ensured that no one can be put at risk by the machine/plant start-up and that all housing doors, cleaning openings and visual inspection openings are closed.

In the event of faults, stop the machine/plant immediately and secure! Have the faults remedied without delay!

After a break in production, the operating personnel must again make sure that no one is in the danger zones and thus at risk when the machine/plant is started up again.

At the end of a day's production the machine/plant is best switched off at the moment when the filter cleaning is finished and the cleaning car is in the parking position (indicator light at the control cabinet). The key to switch on the control voltage on the control cabinet is to be removed and kept in a safe place.

Warning!

The machine/plant may only be switched off using the emergency-off buttons in real emergencies.



Protective covers must not be removed while the machine/plant is in operation.



It is strictly prohibited to undo or remove protective facilities or open the visual inspection opening on the radial fans during operation of the machine/plant.



Do not reach into moving parts or their direction of movement.

Warning!

In the event of faults stop the machine/plant immediately and secure! Remedy faults without delay!

The housing doors, cleaning openings and visual inspection openings must be closed during operation of the machine/plant!

2.6.4 Notes on safety during maintenance

Warning!

During all work relating to operation, changes in production or the settings of the machine/plant and its safety facilities as well as inspection, maintenance and repairs, and the start-up and shut-down procedures according to the notes on maintenance work (see section 10) are to be observed!

The setting, maintenance and inspection work and times prescribed in this assembly and/or operating manual including the work involved in replacing parts/assemblies are to be observed! This work may only be performed by qualified staff.

The machine/plant must always be disconnected and isolated from the power supply before undertaking any maintenance, inspection or repair work on the machine/plant.

This work (see section 10) may only be performed by trained staff in order to guarantee that the setting, maintenance and repair work is carried out properly and without endangering other people. Work on the electrical equipment may only be performed by qualified electricians.

Furthermore, signs stating "**CAUTION - REPAIR/MAINTENANCE WORK**" are to be put up on the machine/plant in order to preclude any risks to people who are not informed.

Should extensive or major repairs be necessary some time, ask Nederman MikroPul GmbH for advice or request the assistance of the Nederman MikroPul GmbH service staff.

In the event of repairs only original spare parts from Nederman MikroPul GmbH in accordance with the specifications may be used as other spare parts might have an adverse effect on the safety of the machine/plant and in such a case Nederman MikroPul GmbH can no longer assume any liability for damage which occurs.



The "**MANUAL**" mode may only be used for maintenance and service work!



The machine/plant must **not** be started up during repair work. The main switch must be secured in the 0-position.



Cleaning and repair work may only be performed when the machine/plant is at a standstill. The machine/plant must be secured against inadvertent re-activation. To this end lock the main command facilities and remove the key and/or put up a warning sign on the main switch.



Repair work and a subsequent test run may only be carried out after prior consultation with the person responsible for this production sector and the applicable accident prevention regulations and the assembly and/or operating manual must be observed.



The housing doors and protective covers may only be opened or removed when the machine/plant is electrical disconnected and the main switch has been turned to the 0-position and secured.



During repair work on machine/plant where toxic gases (e.g. CO, HCL, HF SO_2 etc.) can occur, the contaminated gases present in the interior of the machine/plant must be replaced with fresh air.



Cordon off a large area around the maintenance section, as required!



Individual parts and larger assemblies are to be carefully attached to lifting tackle when being replaced and secured so that there are no risks involved. Only use suitable lifting tackle and load-lifting devices in perfect working order and with an adequate lifting capacity! Do not walk or work under suspended loads!



Only charge experienced staff to sling loads and give directions to crane drivers! The person giving directions must remain in the operator's view or in speaking distance of him.



Measures are to be taken to ensure that people can be easily reached and are prevented from falling during repair work outside the catwalks.



During assembly work above body height use the ladders and work platforms provided for this purpose and other safety facilities. Do not use parts of the machine to climb up! Wear anti-fall equipment for maintenance work at greater heights!



Keep all handles, steps, railings, platforms, catwalks and ladders free from dirt, snow and ice!



While persons are standing at the platform of the dust collector system the safety hook of the ladder must be closed!



Always tighten screw connections which have been undone during maintenance and repair work!



If it is necessary to dismantle safety facilities for maintenance and repair work, they must be remounted and checked immediately on completion of the maintenance and repair work.



Make sure that process materials as well as replaced parts are disposed of in a safe and environmentally benign manner.



Repairs or changes to the electrical equipment of the machine/plant may only be performed by qualified electricians or by trained people under the charge and supervision of a qualified electrician in accordance with electrical engineering regulations.



Only use original fuses according to the technical specifications! In the event of faults to the power supply, switch the machine/plant off immediately!



Machine and machine/plant components on which inspection, maintenance and repair work is being carried out must be de-energized. Check the de-energized parts to ensure they are not live, then earth and short-circuit them and insulate adjacent components which are live!



The electrical equipment of the machine/plant is to be inspected/checked at regular intervals. Any deficiencies, such as loose connections or scorched cables, must be remedied without delay!



After repair works at the radial fans have been effected their inner room has to be checked up through the visual inspection opening on foreign matter which have to be removed!



Make sure before starting up the machine/plant on completion of the cleaning and repair work that no one is in the danger zone. Give a warning of the renewed start-up, possibly with appropriate acoustic or optical signals.

Warning!

The housing doors and protective covers are to be closed or mounted again on completion of the cleaning and repair work.

2.6.5 Troubleshooting with the power supply switched on

In case of malfunction of the machine/plant demanding electrical measurements (e.g. current, tension) or verification of the function of motorised parts, a fault finding with connected electrical energy sources might be necessary.

Warning!

As this method of troubleshooting is extremely dangerous, it should only be adopted if the necessary inspection cannot be performed with the machine/plant switched off. In any case this work may only be carried out by trained specialists.

In order to minimize the risks involved with such a procedure, at least the following fundamental safety measures must be gradually taken:

- Call in additional staff whose task it is to activate one of the emergency-off buttons as soon as there is any danger.
- Put up signs with the warning "**NO ACCESS - REPAIR/MAINTENANCE WORK WHILE PLANT RUNNING**".
- Disconnect and isolate the machine/plant from the power supply.
- Remove as few safety facilities as necessary.
- Before you switch the machine/plant on again, make sure that no one is near the machine/plant.
- Switch the machine/plant on again and make the necessary observations at a safe distance from all moving and live components.
- Switch the machine/plant off again via the button **"Plant OFF"** on the control cabinet.
- Disconnect and isolate the machine/plant from the power supply.
- Carry out the necessary repairs and install all safety and protective facilities again.
- Check the machine/plant and the safety system for function ability. We would point out once again that the machine/plant may only be operated with all the safety system components in working order.

2.7 Technical components of the safety system

2.7.1 Protective facilities

Danger zones and locations which the operating or maintenance staff must check during inspection or maintenance work or to which they must have direct access are to be safeguarded with cordons, covers or electrically secured protective doors.

As operation of the machine/plant without these protective facilities may result in serious accidents, regular checks must be carried out as regards the completeness and operability of the protective facilities.

The safety system can, however, only function optimally if the operating and maintenance staff are familiar with the design and functioning of the system and make sure that its individual components are in good working condition.

Should any protective facilities be missing, please contact Nederman MikroPul GmbH.

2.7.2 Signs

The warning signs mounted on the machine/plant are to draw the staff's attention to the danger areas of the machine/plant; they therefore also represent a very important part of the safety system.

As there is a serious risk of injury or even death if the warning signs are ignored, the works management should make absolutely sure that the warnings and instructions on these signs are followed. It is again the case here that the safety system can only function optimally if the operating and maintenance staff of the machine/plant are aware of the risks involved and act with the appropriate sense of responsibility.

As with all other parts of the safety system, make sure that the warning signs are all there and operable. The signs must be visible and clean; any missing or damaged signs are to be replaced immediately.

Replacement signs can be requested from Nederman MikroPul GmbH.

2.8 Operation and maintenance by several people

Experience has shown that during the performance of work by several people communications and coordination problems arise repeatedly. As this may considerably reduce the safety of those involved, the following provides some brief recommendations for such cases:

- Responsibility for coordination and supervision of the work to be performed is to be given to one single person.
- Everyone involved in the work must know who bears overall responsibility.
- The work is to be planned down to the last detail before work commences and the tasks of all involved are to be clearly defined.
- If you have to deviate from the planned work schedule, everyone involved must be informed.
- The person responsible must always be informed of the whereabouts of the people involved and the work they are carrying out.
- No movement of the machine/plant may be initiated if people are in the direct vicinity of a danger zone or if not everyone is in view.
- Instructions and information are to be clear and straight-forward, i.e. given either verbally or in writing - hand signals may be misunderstood.
- The decision as to whether the work is completed and what power sources can be switched on again may only be taken by the person responsible.
- When the machine/plant is started up again, it must be in the basic position.
- It must also be ensured that when restarting the machine/plant no one can be endangered by machine/plant movements.

2.9 Inspection and maintenance of the safety system

The safety system of the machine/plant is only completely functionable when it is serviced and maintained properly.

The individual components must be in good working order, correctly installed and fully operable.

If it is discovered during an inspection that faults have occurred, parts are missing or electrical safety circuits are not fully operable, the maintenance staff must be informed without delay. The machine/plant may only be switched on again when all the deficiencies discovered have been remedied.

2.9.1 Daily checks

Checking the safety system must become daily routine for the operating personnel. The following points must be checked every day:

- Safety facilities (covers, cordons etc.)
- Completeness, legibility and proper mounting of the instruction and warning signs

2.10 Tasks of the operator

The operator bears the responsibility for the safety of the employees working on the machine/plant. It must therefore fulfil the following tasks:

- Train and instruct competent operating and maintenance personnel (at least specialised personnel).
- Always keep the know-how of the staff on the operation and maintenance of the machine/plant in line with the state of the art.
- Ensure that the safety system complies with national and local safety regulations.
- Ensure that the safety system is fully operable every time.
- Ensure that all the operating staff understand the recommendations and information relating to the safety system.
- Ensure that the assembly and/or operating manual is available and in good condition.
- Ensure that the work procedures recommended by Nederman MikroPul GmbH to protect the staff are observed by all those involved.
- Take action so that the machine/plant is only operated in a safe and functionable condition. The machine/plant may only be operated if all the protective facilities and safety-related devices are installed and operable.

2.10.1 Organizational measures

The following points are to be observed:

- Ensure that all the safety and hazard signs are easily legible and clearly visible
- No changes, additions and conversions may be made to the machine/plant without the written prior approval of Nederman MikroPul GmbH. This also applies to the installation and setting of safety facilities and to welding on bearing structures. Non-compliance will render the warranty invalid.
- The specified intervals for maintaining the machine/plant (see section 10) are to be observed.
- Inform the staff of the location and operation of fire extinguishers!
- Spare parts must comply with the technical requirements laid down by Nederman MikroPul GmbH. This is always guaranteed by original spare parts.
- Inform operating personnel before the start of special and maintenance work. Appoint supervisors.
- Extensively cordon off the maintenance area if necessary in order to restrict access to the machine/plant.
- Ensure safe and environmentally benign disposal of process materials and replaced parts.

2.10.2 Staff selection and qualifications

Work on the machine/plant may only be undertaken by qualified personnel.

The owner may only entrust independent operation or maintenance of the machine/plant to persons who

- have reached the age of 18
- are physically and mentally suitable
- can be expected to discharge their assigned tasks reliably
- have been instructed with regard to operation and maintenance of the machine/plant and have proved their aptitude to the owner.

In addition to providing theoretical know-how, instruction also includes the opportunity to acquire sufficient practical experience, as well as to acquire the ability to recognize defects jeopardizing safety at work.

The tasks assigned to operators and technical personnel must be clearly defined by the owner.

- Work on/with the machine/plant may only be carried out by reliable members of staff.
- Only deploy trained or instructed personnel. Clearly define the areas of responsibility of the operating, maintenance and repair staff.
- Make sure that only people work on the machine/plant who are charged to do so.
- Establish the field of responsibility of the machine operator - also with regard to road traffic regulations - and permit him to refuse to carry out instructions of third parties which contravene the safety regulations.
- Staff who are undergoing training and instruction or general vocational training may only be permitted to work on the machine/plant under the constant supervision of an experienced member of staff.
- Work on the electrical equipment of the machine/plant may only be carried out by a qualified electrician or by trained staff under the charge and supervision of a qualified electrician in accordance with electrical engineering regulations.

2.10.3 Electrical equipment

- The electrical equipment of the machine/plant is to be inspected/tested at regular intervals. Any deficiencies, such as loose connections or scorched cables, must be eliminated immediately.
- In case of interventions at parts under tension, a second person should be present for stopping the machine/plant or the electrical cabinet in emergency case (see section 2.4.5). Cordon off the working area with a red/white safety chain and a warning sign. Only use insulated tools!

2.11 Fire protection

2.11.1 Preventive fire protection



The operator must ensure that burning/glowing parts cannot enter the machine/plant with the personnel appointed to undertake maintenance/inspection work!

This note relates only to safety aspects (conduct of the personnel during maintenance/inspection work on the machine/plant) and not to the machine/plant production technical design.

The following points must be noted or carried out by the owner:

- **Workers must be regularly instructed** (at least once per year) with regard to the fire hazards associated with their activities and how to avoid these. This is essential if preventive fire protection is to be successful.
- **Correct conduct** is essential for preventing fires. Among other things, this includes compliance with the regulations governing the use of naked lights, welding and soldering, the handling of flammable media and compliance with the ban on smoking.
- **A clean and tidy workplace** also helps to prevent fire and reduces the risk of accidents.
- **Flammable substances may only be transported, stored and processed** in accordance with the applicable regulations.
- **Welding, soldering, abrasive cutting** and similar operations may only be undertaken outside the approved work areas if a **welding permit** has been obtained.



External contractors must be informed accordingly by the customer. They are obliged to obtain information on the possible hazards from the member of staff responsible for the area concerned.

- **Flammable wastes and residues** must be stored in the stipulated containers until they are disposed of.
- **Electrical equipment** must comply with the applicable regulations. It must be installed in such a way that it does not pose a fire hazard (e.g.: avoid any build-up of heat, ensure that ventilation openings are not covered, maintain a safe distance). Its correct condition must be documented through regular inspections (GUV 2.10). At the end of the shift, care must be taken to ensure that electrical equipment which is not designed for continuous duty is **safely disconnected from the mains supply** (e.g.: switch off main switch, unplug the connector).

2.11.2 Defensive fire protection – organizational measures

So that fire fighters can be alerted quickly and comprehensively in the event of fire or an emergency, and so that all required fire-fighting and rescue activities can be undertaken, the following plans must be drawn up by the owner for each individual area and regularly updated as required:

- **Alarm plan**

  The purpose of the alarm plan is to ensure that the right action is taken quickly in a hazard situation. It must be drawn up the person responsible in accordance with the prevailing circumstances. The type of alarm (alarm signalling equipment, alarm signs and emergency numbers) and the collecting point outside the building must be specified in particular.

- **Emergency escape and rescue plan**

  This plan is displayed in the building or working facilities if necessary on account of their location, size or type of use. If necessary, procedures should be trained for leaving the building via the specified emergency escapes and rescue routes.

- **Fire fighting plan**

  The fire fighting plan contains details on technical and safety systems, as well as layout drawings of the individual floors, with information on areas of particular danger (e.g. location of pressurized gas cylinders or areas in which hazardous materials are stored). Its primary purpose is to serve as a guide to the premises for fire fighters and allow them to assess the situation. It must be updated in line with changing conditions.

The following points must also be noted by the owner:

- **Emergency exits**, such as passages, corridors, stairwells and outdoor paths or roads, must always be fully accessible over their full width, must not be used to store flammable objects and must be duly marked.
- **Fire fighting equipment,** such as fire extinguishers, must be installed where they are clearly visible or marked. They must not be obstructed.
- **Access roads and parking areas for fire trucks** must remain clear at all times.
- **The position and operation of fire extinguishers** must be made known.
- **Procedures for reporting and fighting fires** must be observed.

2.11.3 Fire classes according to DIN EN 2

Fire class	Type of burning substance	Suitable extinguishing agents
	Fires involving **solid materials**, mainly of organic origin, which normally produce flames and glow when they burn (e.g. wood, straw, coal, paper, additives such as blast furnace coke, activated carbon, etc.)	Water ABC dry powder Foam extinguisher
	Fires involving **liquid or liquefying substances** (e.g. petrol, alcohol, oils, grease, paints, paraffin, tar)	Carbon dioxide Foam extinguisher ABC dry powder BC dry powder
	**Metal** fires (especially flammable light metals, such as magnesium and aluminium, as well as sodium and potassium)	Dry extinguishing powder for metals

2.11.4 Action in the event of fire

2.11.4.1 Plant



The doors of the cassette-type filter and the service openings of the plant must NOT be opened in the event of a fire!

If a fire is suspected or actually breaks out:

- Shutdown plant
- All manually actuated valves in the pipe system must be closed.
- The supply of fresh air must be interrupted.
- Switch off electrical consumers.
- Call the fire department.
- Cool the cassette-type filter from the outside.

2.11.4.2 Residual material

Warning!

Note the details specified with regard to fire classes when extinguishing burning residual material!

3 General Information

Contents

3.1 Initial commissioning

3.1.1 Function test for filter cleaning

3.2 Glossary
3.3 Installation layout
3.4 R&I Flow diagram

3.1 Initial commissioning



Before commissioning of the plant it is necessary to follow the comments in section 2 „SAFETY"!

The commissioning of the plant may only be executed by a trained expert.

Initial commissioning is carried out by a qualified employee of Nederman MikroPul GmbH.

In order to protect the flat bags, slaked lime ($CaOH_2$) or Filtrasil must be added to the filter system before commissioning the plant.

The filter cleaning function must not be in operation while adding the lime ($CaOH_2$) or Filtrasil. The filter cleaning and the dust discharge functions must be switch off.

Then switch on the plant. Ensure that a sufficiently large negative pressure is built up.

Slaked lime ($CaOH_2$) or Filtrasil is then added upstream of the flat bag filter until a layer of dust has formed on the surface of the flat bag (Lime: approx. 25 – 30 kg per filter chamber / Filtrasil: approx. 1 kg per filter chamber).

After adding the lime ($CaOH_2$) or Filtrasil the plant must remain in operation with deactivated filter cleaning function for approx. 1 to 2 hours so that the added lime ($CaOH_2$) or Filtrasil can settle in the pores of the flat bags. Then the filter cleaning and the dust discharge functions can be switched on again.

3.1.1 Function test for filter cleaning

Correct operation of the cleaning air valve and filter cleaning must be checked when starting for the first time.

Before starting the test, care must be taken to ensure that the cleaning air valve is closed, i.e. that the mark on the end shaft is horizontal (see diagram).

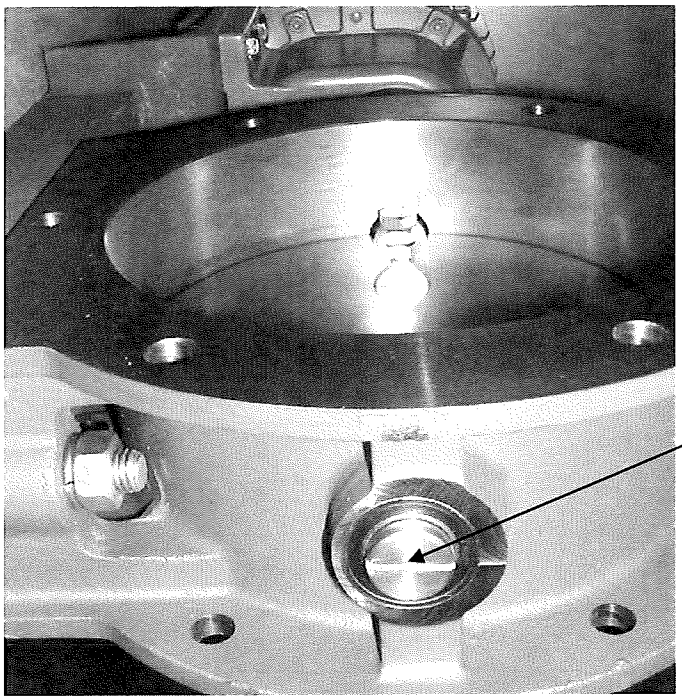

The cleaning cycle starts after switching on the system and enabling the filter cleaning function. During the cleaning cycle, the cleaning air valves open for approx. 1.2 seconds before each flag bag row.

3.2 Glossary

Separation process The collection of dust on the outside of the flat bags when the polluted process gases flow through these flat bags.

Compartment The compartments in the flat bag filter have the size 0.5, 0.75 or 1.0. According to the filter size (see type designation in section 1) the filter contains the following compartments:

Filter size	Number of compartments	Filter size	Number of compartments
0,75	1 x 0,75	6,00	6 x 1,0
1,00	1 x 1,0	6,25	4 x 1,0 + 3 x 0,75
1,25	1 x 0,75 + 1 x 0,5	6,50	5 x 1,0 + 2 x 0,75
1,50	2 x 0,75	6,75	6 x 1,0 + 1 x 0,75
1,75	1 x 1,0 + 1 x 0,75	7,00	7 x 1,0
2,00	2 x 1,0	7,25	5 x 1,0 + 3 x 0,75
2,25	3 x 0,75	7,50	6 x 1,0 + 2 x 0,75
2,50	1 x 1,0 + 2 x 0,75	7,75	7 x 1,0 + 1 x 0,75
2,75	2 x 1,0 + 1 x 0,75	8,00	8 x 1,0
3,00	3 x 1,0	8,25	6 x 1,0 + 3 x 0,75
3,25	1 x 1,0 + 3 x 0,75	8,50	7 x 1,0 + 2 x 0,75
3,50	2 x 1,0 + 2 x 0,75	8,75	8 x 1,0 + 1 x 0,75
3,75	3 x 1,0 + 1 x 0,75	9,00	9 x 1,0
4,00	4 x 1,0	9,25	7 x 1,0 + 3 x 0,75
4,25	2 x 1,0 + 3 x 0,75	9,50	8 x 1,0 + 2 x 0,75
4,50	3 x 1,0 + 2 x 0,75	9,75	9 x 1,0 + 1 x 0,75
4,75	4 x 1,0 + 1 x 0,75	10,00	10 x 1,0
5,00	5 x 1,0	10,25	8 x 1,0 + 3 x 0,75
5,25	3 x 1,0 + 3 x 0,75	10,50	9 x 1,0 + 2 x 0,75
5,50	4 x 1,0 + 2 x 0,75	10,75	10 x 1,0 + 1 x 0,75
5,75	5 x 1,0 + 1 x 0,75	11,00	11 x 1,0

Filter element Is the flat bag with inserted spacer mat.

Filter-differential pressure Is the pressure difference between the negative pressure on the cleaned process gas side and on the polluted process gas side.

Clamping frame Serves as a sealing element in order to press the sealing bead of the flat bag onto the slotted wall.

Parking time Is the period during which the filter cleaning system is not in operation, i.e. the cleaning car with cleaning nozzle stands on the right in the cleaned process gas chamber in the parking position. At the same time the cleaning air fan is also switched off and the cleaning air valves are closed. The parking time can be varied.

Leg spring Presses the clamping frame and thus the sealing bead of the flat bag against the slotted wall.

Slotted wall Forms the partition wall between the polluted process and cleaned polluted process gas chamber.

Cleaning nozzle Consist of the nozzle body and the nozzle lining. It is mounted in the cleaning car and its function is to optimally distribute the cleaning air to all the filter elements in one vertical row.

Cleaning air valve Automatically controls the cleaning air pulse necessary for the filter cleaning system by alternately opening and closing the flap.

4 Transport and storage

Warning!

Protect all parts against rain, snow, aggressive atmospheres and other detrimental influences of all kinds.

No guarantee is assumed for any damage and consequential damage caused through the non-observance of the safety and protection regulations.

The transport and storage may take place only in areas, where no explosive atmosphere is present.

5 Descriptions

Contents

5.1 Flat bag filter

5.1.1 Deflecting station
5.1.2 Cleaning air valve

5.1 Flat bag filter

Design

The flat bag filter of the series FS consists of (see fig.):

- the filter housing (welding unit)

  The individual filter sizes are assembled from several elements and welded together. This guarantees an absolute leak-tight design. The drive station is arranged on the left-hand side as a standard feature. A filter housing consists of a left-hand side section, a right-hand side section and, depending on requirements, one or several individual back and slotted walls of various sizes. The slotted wall in the filter housing separates the polluted process and cleaned process gas chambers.

  The cleaned process gas chamber forms a closed chamber with the bottom and top plates. A track is mounted on both the bottom and top plates to guide the cleaning cars. Depending on the number of cleaning cars, connecting branches are provided in the top plate for the cleaning air valves and telescopic pipes.

- the assembly components

  These are both individual parts as well as assemblies which are installed in and on the filter housing (e.g. cleaning cars, cleaning air facility, drive unit, flat bags, protection sections in the case of abrasive dusts).

1 Polluted process gas chamber
2 Cleaned process gas chamber
3 Drive station
4 Deflecting station
5 Cleaning car with cleaning nozzle
6 Telescopic pipe
7 Housing door
8 Cleaning air inlet

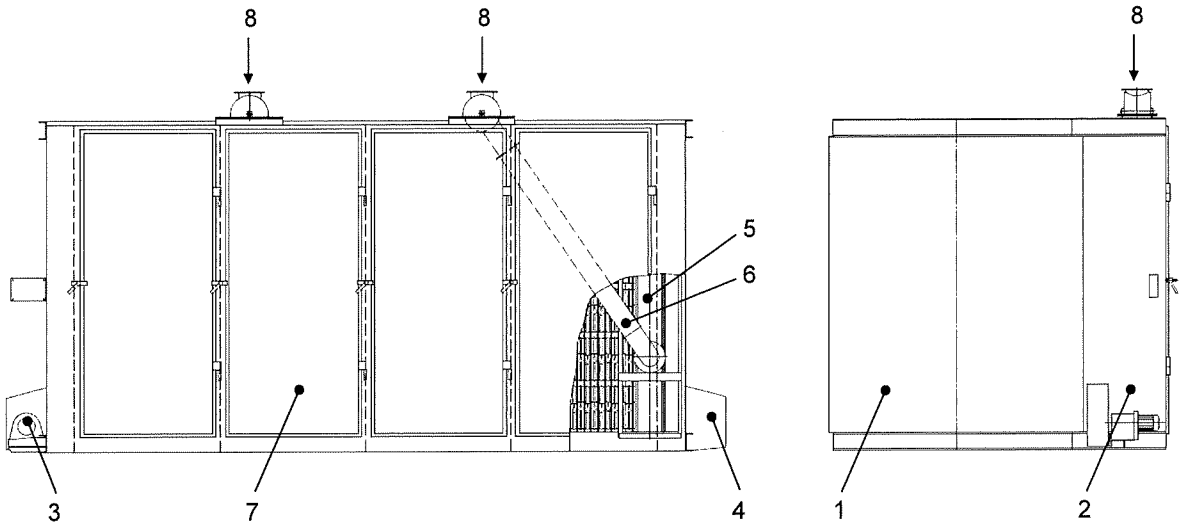

Access to the flat bags, the cleaning nozzle and the telescopic pipe is guaranteed through large housing doors on the cleaned process gas chamber side.

The flat bags are arranged horizontally in the polluted process gas chamber and pressed against the slotted wall and sealed with clamping frames and leg springs. The spacer mat inserted into each flat bag prevents contact with the flat bag inside surface when dust is being separated.

The vertically arranged cleaning nozzle covers three adjacent vertical flat bag rows. Free access for the cleaning air is only provided for the middle flat bag row. This prevents the intake of dust dislodged from the neighboring flat bags during the cleaning process.

The cleaning nozzle is driven by a chain/rope drive mechanism. The drive station is located outside on the filter housing.

The cleaning air facility with cleaning air fan and cleaning air valve is mounted on the cleaned process gas chamber and connected to the cleaning nozzle by a telescopic pipe.

Functioning

The polluted process gases are cleaned in the flat bag filter and the separated dust is discharged.

The polluted process gases pass through the polluted process gas hood from above into the polluted process gas chamber and flows through the flat bags to the cleaned process gas chamber. The dust is retained on the outside surface of the flat bags.

The dust adhering to the flat bags is removed fully automatically (ON-Line) during the dust collection process by a counter current air stream. The cleaning air radial fan generates the required amount of air and the cleaning air valve provides the pulse required for cleaning. The cleaning air pulse blows the flat bags up and the adhering dust is thus dislodged.

The cleaning car with the cleaning nozzle moves in cycles from flat bag row during the cleaning process. The exact position of the cleaning nozzle in front of each flat bag row is governed by an indexing mechanism (see section 5.).

The filter cleaning system is triggered on expiry of a pre-set time (parking time). The cleaning cycles depend on the type of dust and the polluted process gas content.



In order to guarantee trouble-free operation, the maintenance instructions (see section 10) are to be observed.

5.1.1 Deflecting station with indexing disc

Design

The mechanical section for the indexing mechanism is integrated in the deflecting station. The deflecting station is located on the right outside of the filter housing (standard design). The deflecting station is protected by a cover. (see fig.)

The assembly components of the indexing mechanism are:

1 Console
2 Indexing disk
3 Pulley
4 Inductive switch

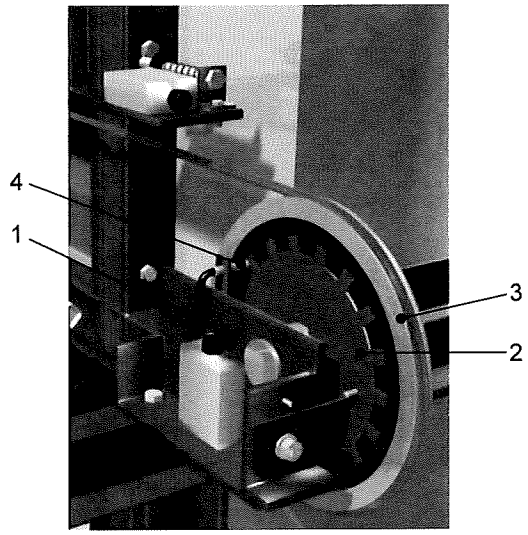

Functioning

The deflecting station with indexing disc is used to control the cleaning car in the flat bag filter.

When the cleaning car advances, the indexing disc is entrained by the pulley through frictional contact. When a tooth comes to the inductive switch, the cleaning car with the cleaning nozzle stops exactly in front of the flat bag row in question.

When the cleaning car reverses (continuously without indexing), the indexing disc is blocked after one revolution, which means that tooth No. 1 stops in front of the inductive switch. This ensures that the indexing disc is always brought back to its correct starting position again after each cleaning cycle. As soon as the cleaning car has activated the limit switch on the deflecting side, the cleaning nozzle is always positioned in front of the first flat bag row.

The indexing mechanism does not required any setting work even after the replacement of the chain and rope, which will be necessary at some time during the life of the plant.

In order to guarantee trouble-free operation, the maintenance instructions (see section 10) are to be observed.

5.1.2 Cleaning air damper

Design

The cleaning air damper is consists of:

1 Flap housing
2 Flap
3 Coupling
4 Gear unit rotary field magnet

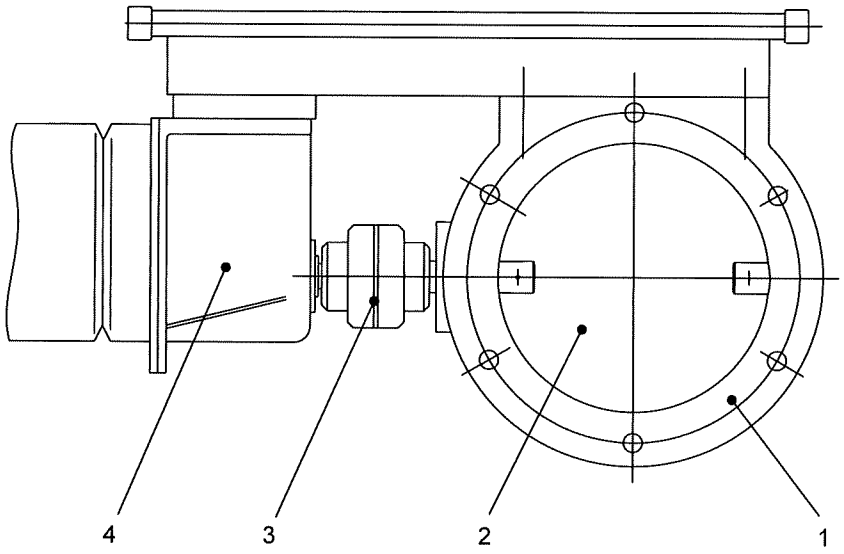

Functioning

The cleaning air damper is mounted on the cleaned process gas chamber and is used for cleaning the flat bags.

The cleaning air damper provides the pulse required for cleaning the flat bags by opening and closing rapidly. The cleaning air pulse blows the flat bags up and the adhering dust is thus dislodged.

In order to guarantee trouble-free operation, the maintenance instructions (see section 10) are to be observed.

Not relevant

7 Assembly

Contents

7.1 Notes

7.1.1 Tightening the screws
7.1.2 Tightening procedure
7.1.3 Tools

7.1.3.1 Torque wrench
7.1.3.2 Pneumatic impact wrench

7.1.4 Tightening torques

7.1.4.1 High-strength 10.9 screws in accordance with DIN EN 14399-4
7.1.4.2 Screws in accordance with DIN EN ISO 4014 and DIN EN ISO 4017
7.1.4.3 Stainless steel screws

7.1.5 Releasing screw connections

7.2 Configuration diagram - dust collection hopper
7.3 Flat bag filter

7.3.1 Telescopic pipe – top piece
7.3.2 Cleaning air damper
7.3.3 Cleaning air duct work
7.3.4 Cleaning air fan with silencer
7.3.5 Screw connection dirty gas hood

7.4 Ductwork

7.4.1 Configuration diagram for flanges

7.4.1.1 Flat sealing
7.4.1.2 Sealing compound

7.5 Earthing of the plant

7.1 Notes

The plant is supplied in assemblies and/or individual parts.

We recommend you to have the plant assembled by Nederman personnel or under the supervision of an assembly manager from Nederman.



The relevant accident prevention regulations (DGUV Regulation 1 "Principles of Prevention" and DGUV Regulation 38 "Construction work") must be observed during the assembly work!

At locations outside Germany, the corresponding regulations in the respective country must be observed!

The individual parts may only be slung at the lugs provided for this purpose!



After have been erected the plant must be completely doweled or screwed or welded at the bearing plate of the dust collection hopper.

The following instructions for tightening bolts must be observed at all times.

7.1.1 Tightening the screws

Utmost care must be exercised when tightening screws, as this involves the greatest uncertainties. When tightening screws, a defined pre-tension must be achieved without causing any permanent deformation of the screw. The following factors have a decisive effect on the tightening or pre-tensioning force:

- Method and tool used for tightening
- Friction in the screw thread
- Friction between head or nut and the mating face

Numerous tables would have to be compiled for the last two items, but this would only limit the uncertainty to a certain extent and would be impracticable in practice.

7.1.2 Tightening procedure

Preference must be given to using the **torque method** of pre-tensioning by turning, normally by turning the nut. Depending on the condition of the surface, the specified torque values must be applied in order to apply the standard pre-tensioning force pursuant to section 7.1.4. This method allows connections with numerous screws to be pre-tensioned step-by-step and also makes it possible to retighten screws for checking or to compensate loss of tension.

Other possible methods include the momentum method, angle of rotation method or combined pre-tensioning method. These methods are not included in the tables from section 7.1.4 onwards and should not be used.

7.1.3 Tools

7.1.3.1 Torque wrench

The torque must be set precisely on the torque wrench. After tightening the screw, the torque wrench must be relieved completely. If it is found that the wrench was not relieved completely when setting the torque, it must be checked as the reading on the scale will in all probability differ from the real value. When tightening the screw, the wrench must be turned smoothly (not abruptly) until the torque limitation is tripped. When the wrench has been tripped, it must be relieved otherwise the torque wrench will be damaged if the screw is tightened further. Torque wrenches are tools with measuring function and subject to inspection within the framework of monitoring test and inspection tools.

7.1.3.2 Pneumatic impact wrench

Pneumatic impact wrenches are not suitable for controlled tightening of screw connections. Since the torque may be very high, depending on the size of wrench used, the screw connection may be damaged when using an impact wrench. The maximum torque that can be applied by the impact wrench must therefore be checked before starting assembly.

7.1.4 Tightening torques

The following basic conditions must be taken into account when tightening screws:

- Screws must be new, with a smooth thread surface
- Material combinations: high strength/high strength, steel/steel, stainless steel/stainless steel
- Screws must be tightened crosswise in two passes
- Screws must not be additionally greased or oiled after delivery, otherwise the torque values specified in sections 7.1.4.1 to 7.1.4.3 cannot be maintained.

7.1.4.1 High-strength 10.9 screws in accordance with DIN EN 14399-4



Tightening torques in accordance with DIN EN 1090-2; combined with DIN EN 1993-1-8.

Size	Pre-tensioning force kN	Torque with torque wrench Nm
M12	50	100
M16	100	250
M20	160	450
M22	190	650
M24	220	800
M27	290	1250
M30	350	1650

7.1.4.2 Screws in accordance with DIN EN ISO 4014 and DIN EN ISO 4017

Size	Strength class	Pre-tensioning force kN	Torque with torque wrench Nm
M8	8.8	18	27.3
M10	8.8	29	54
M12	8.8	42	93
M14	8.8	57.5	148
M16	8.8	79	230
M20	8.8	127	464

7.1.4.3 Stainless steel screws

Size	Pre-tensioning force kN	Torque with torque wrench Nm
M5	3	3.8
M6	6.2	6.7
M8	12.2	16.3
M10	16.3	33
M12	20	56
M14	24.2	83
M16	45	136

7.1.5 Releasing screw connections

Note that a higher torque or tensioning force is needed to release screw connections than for tightening them. If the screw connection is to be reused, this increase must not exceed 5%.

7.2 Configuration diagram - dust collection hopper

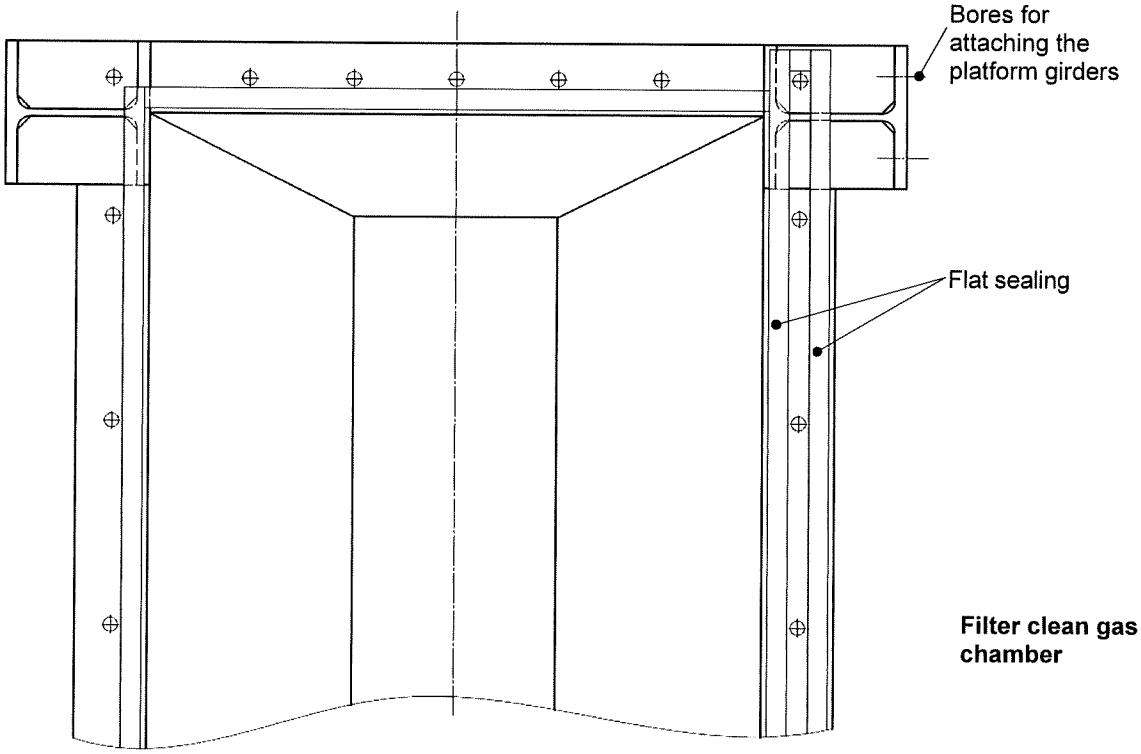

7.3 Flat bag filter

Assembly

Assembly is performed in accordance with the installation drawing.

The relevant accident prevention regulations (DGUV Regulation 1 "Principles of Prevention" and DGUV Regulation 38 "Construction work") must be observed during the assembly work!

At locations outside Germany, the corresponding regulations in the respective country must be observed!

The individual parts may only be slung at the lugs provided for this purpose!

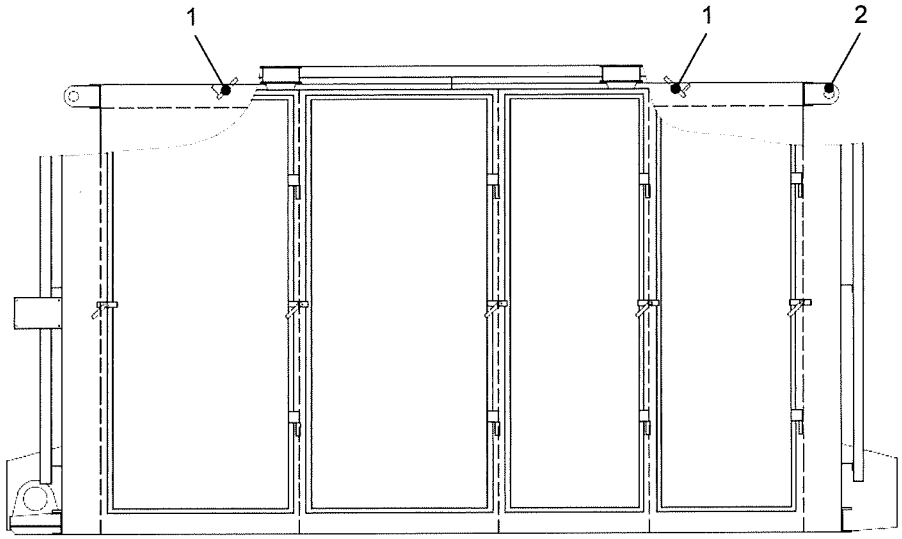

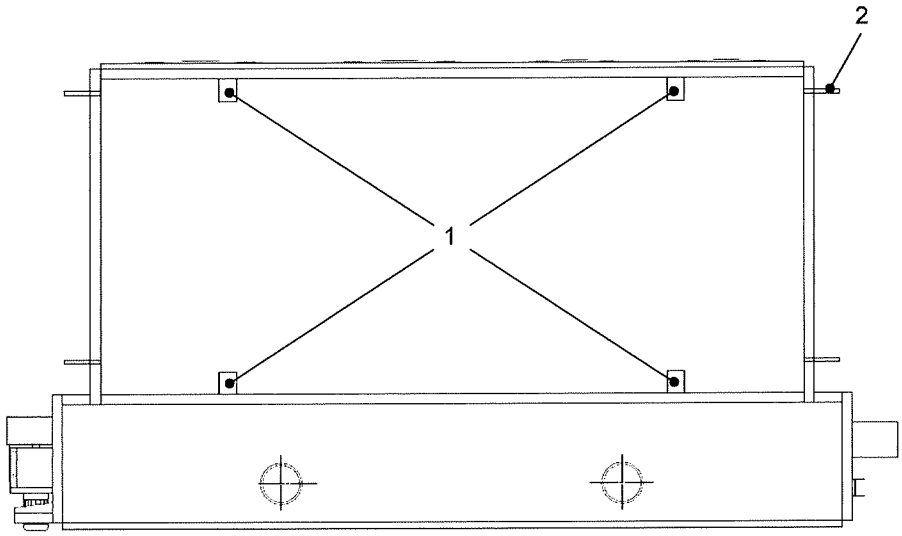

The eyes (2) may only be used for securing the filter during transportation and must not be used for lifting the filter.

Assembly sequence:

It must be ensured before the filter is mounted that the top sealing flange of the dust collector hopper is provided with the flat sealing (see section 7.4.1.1).

- Raise the filter using the suspension lugs provided for this purpose with a crane.
- Slowly lower the filter, deposit it above the top sealing flange of the dust collection hopper, fix it with assembly mandrels and insert some bolts (M 12 x 45 mm) on the rear of the filter to secure it.

Make sure that the housing doors are aligned in the direction of the platform.

- Lower the entire filter onto the dust collection hopper.
- Provide all screw connection points **V, W, X, Y** and **Z** as shown in the drawings with bolts, nuts and the corresponding washers.

The screw connection point marked **Z** is intended for earthing the plant.

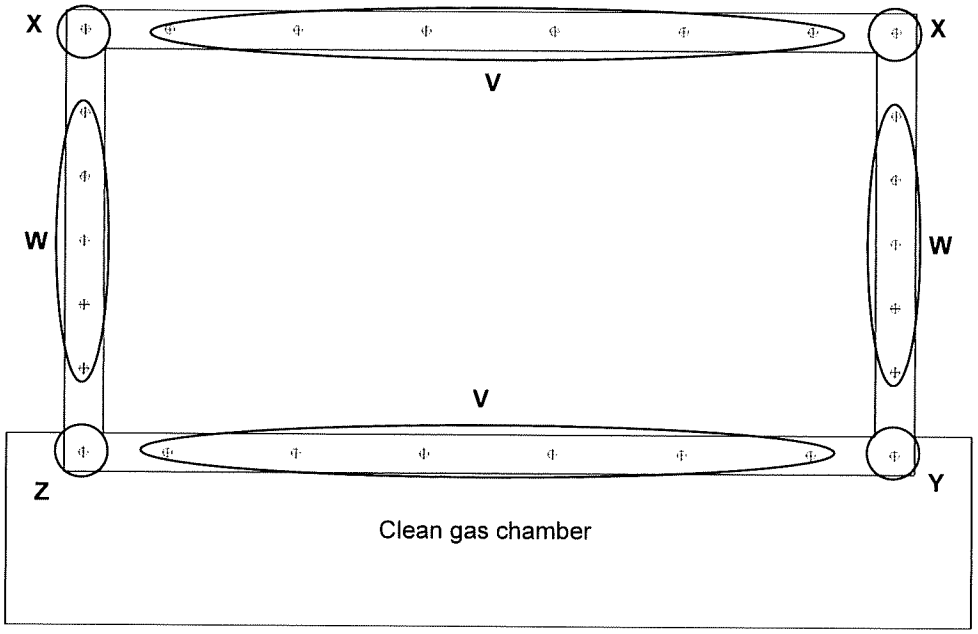

Sketch screw connection V

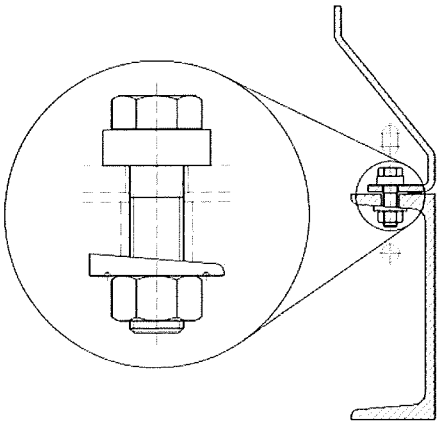

1 pc. Hexagonal screw
M12 x 45 mm
DIN 931/DIN ISO 4014
Strength class: 8.8
1 pc. Washer 13,5
thick
DIN 7989
1 pc. Washer for U-section 13,5
slant
DIN 434
1 pc. Hexagonal nut
M12
DIN ISO 4032
Strength class: 8.8

Sketch screw connection W

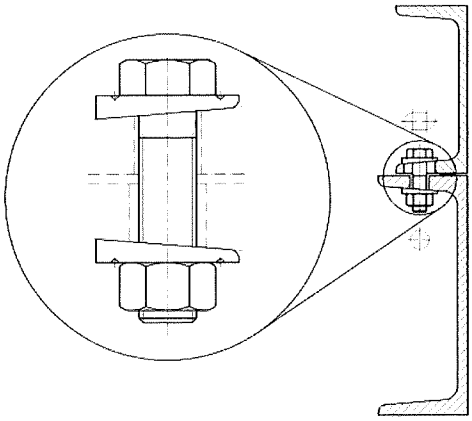

1 pc. Hexagonal screw
M12 x 45 mm
DIN 931/DIN ISO 4014
Strength class: 8.8
2 pc. Washer for U-section 13,5
slant
DIN 434
1 pc. Hexagonal nut
M12
DIN ISO 4032
Strength class: 8.8

Sketch screw connection X

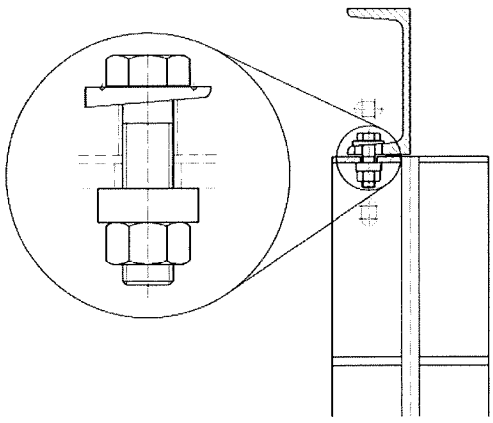

1 pc. Hexagonal screw
M12 x 45 mm
DIN 931/DIN ISO 4014
Strength class: 8.8
1 pc. Washer 13,5
thick
DIN 7989
1 pc. Washer for U-section 13,5
slant
DIN 434
1 pc. Hexagonal nut
M12
DIN ISO 4032
Strength class: 8.8

Sketch screw connection Y

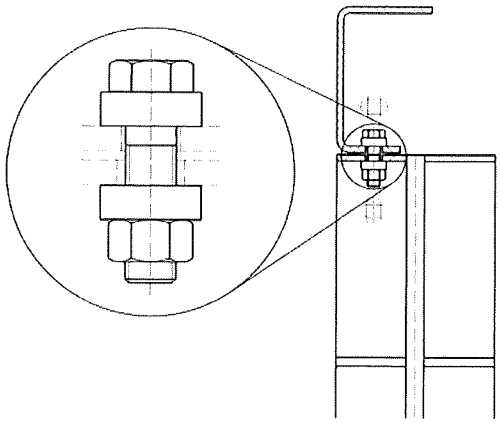

1 pc. Hexagonal screw
M12 x 45 mm
DIN 931/DIN ISO 4014
Strength class: 8.8
2 pc. Washer 13,5
thick
DIN 7989
1 pc. Hexagonal nut
M12
DIN ISO 4032
Strength class: 8.8

Sketch screw connection Z – Earthing the plant

In order to ensure correct earthing of the plant, use a stainless steel screw connection between the dust collection hopper and the flat bag filter.

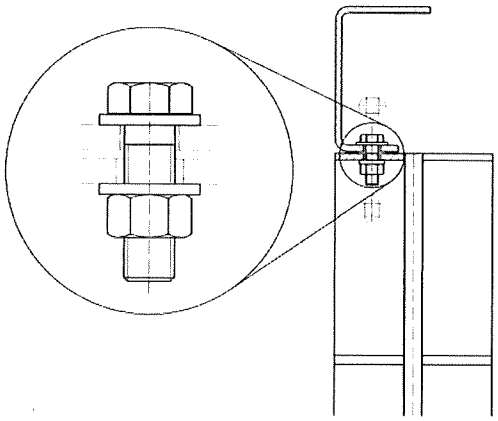

1 pc. Hexagonal screw
M12 x 45 mm
DIN 933/DIN ISO 4017
Material: stainless steel
2 pc. Lock washer 13,5
According to DIN 6797
Material: stainless steel
1 pc. Hexagonal nut
M12
DIN ISO 4032
Material: stainless steel

- Tighten all bolts.

- Apply the flat sealing on the top sealing flange.

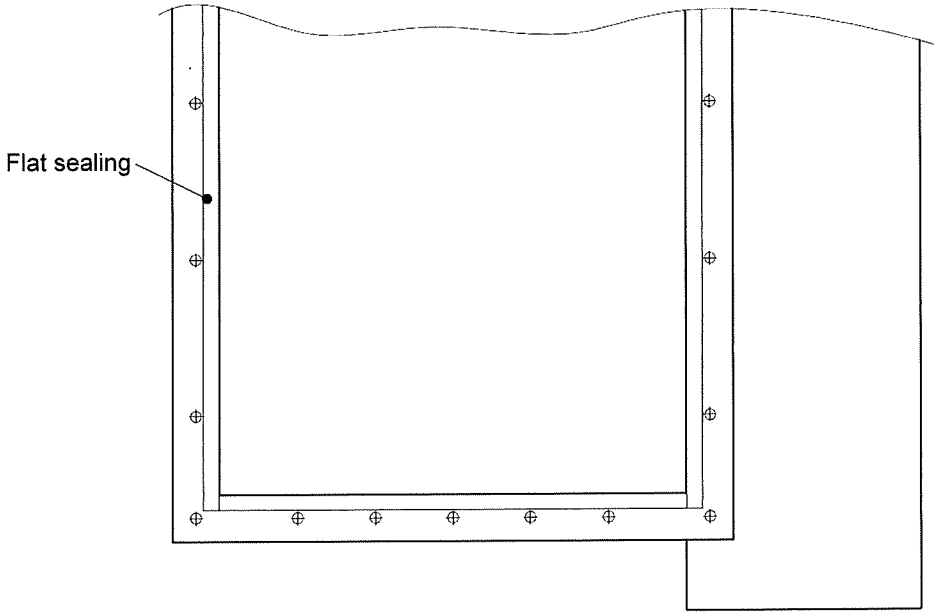

All plant assemblies are to be checked for damage to the paint work on completion of all the assembly work.

Any damage to the paint and/or welds is to be touched up professionally.

7.3.1 Telescopic pipe – top piece

Assembly

The relevant accident prevention regulations (DGUV Regulation 1 "Principles of Prevention" and DGUV Regulation 38 "Construction work") must be observed during the assembly work!

At locations outside Germany, the corresponding regulations in the respective country must be observed!

The individual parts may only be slung at the lugs, hooks, eyes or openings provided for this purpose!

Assembly sequence:

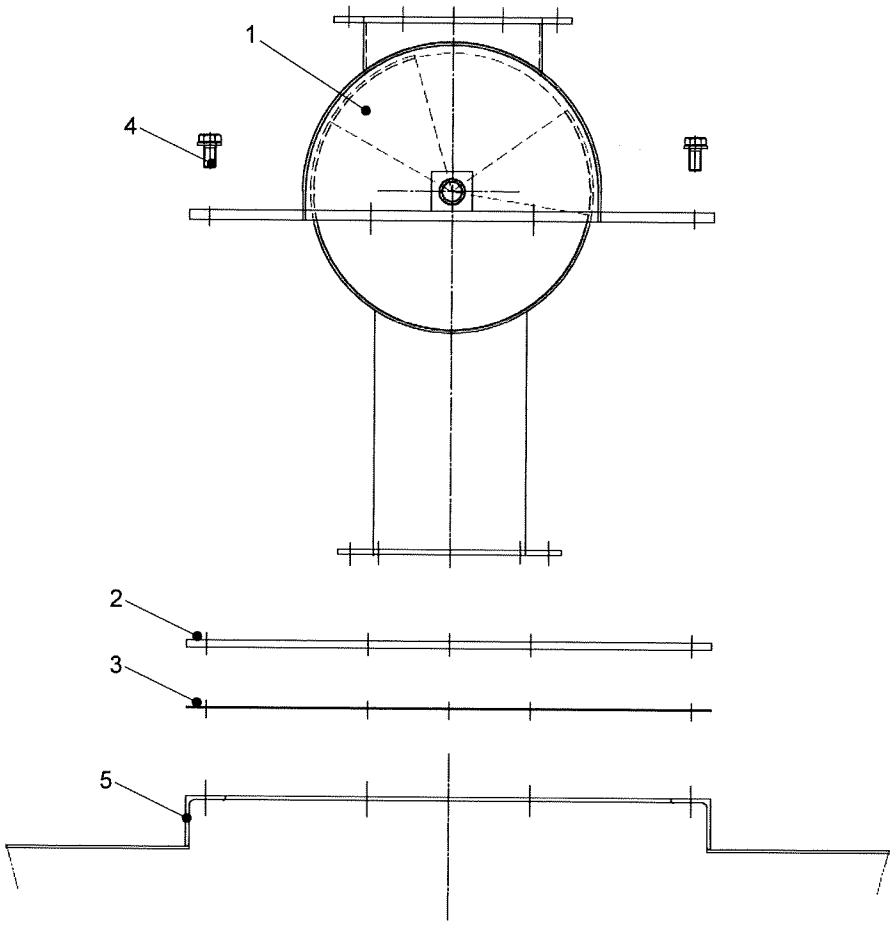

- Place stainless sealing plate (3) on flange (5) in cover sheet.
- Place felt sealing (2) on sealing plate.
- Place top part of telescopic pipe (1) on felt sealing and fasten in place with bolts (4 – M 12 x 30 mm) and washers.
- Tighten all bolts.

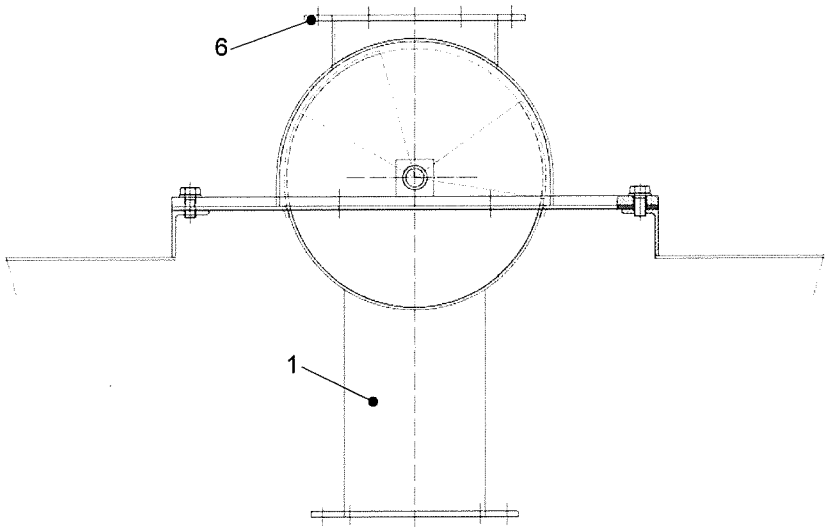

- Apply sealing compound (see configuration diagram – section 5) to the flange of the telescopic pipe (pre-mounted in the clean gas chamber of the flat bag filter).
- Connect lower section of the telescopic pipe (pre-mounted in the clean gas chamber of the flat bag filter) to connecting points of the upper section of the telescopic pipe (1) using bolts (M 10 x 30 mm), nuts and washers.
- Tighten all bolts.
- Apply sealing compound on the top flange of the telescopic pipe (6) according to the configuration diagram (see section 7.4.1.2).

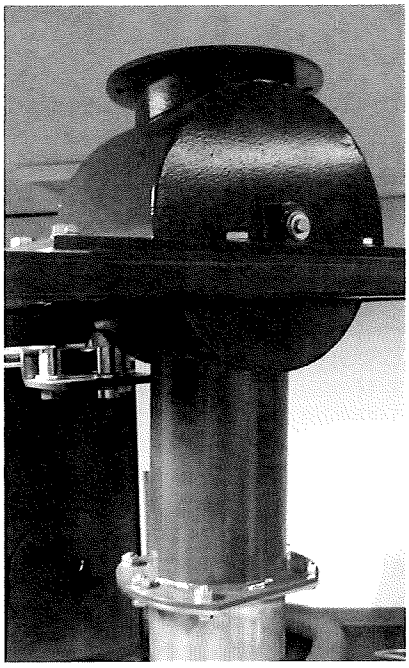

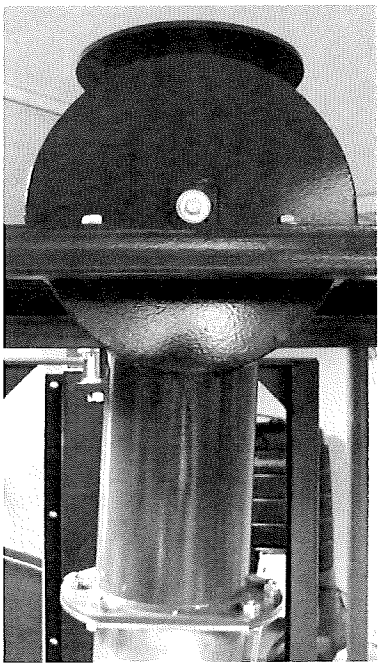

All plant assemblies are to be checked for damage to the paint work on completion of all the assembly work.

Any damage to the paint and/or welds is to be touched up professionally.

7.3.2 Cleaning air damper

Assembly

The relevant accident prevention regulations (DGUV Regulation 1 "Principles of Prevention" and DGUV Regulation 38 "Construction work") must be observed during the assembly work!

At locations outside Germany, the corresponding regulations in the respective country must be observed!

The individual parts may only be slung at the lugs, hooks, eyes or openings provided for this purpose!

Assembly sequence:

- Before the cleaning air damper is mounted, the flange of the relevant connection piece on the top plate of the filter must be coated with sealing compound according to the configuration diagram (see section 7.4.1.2).
- The cleaning air valve is now placed on the connection piece (see figure).

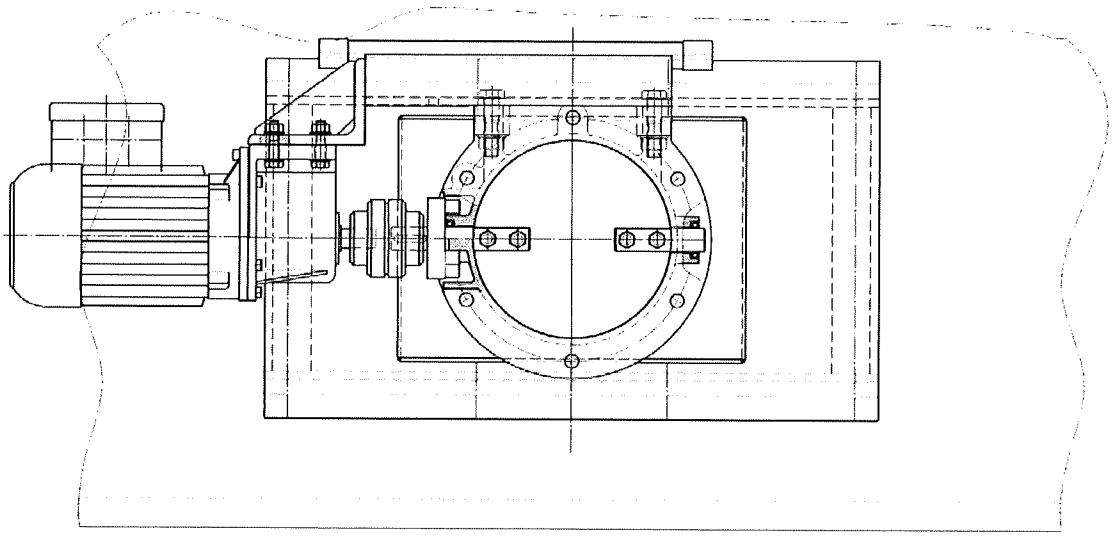

- Secure cleaning air damper in place using clamping wrench.
- Apply sealing compound on the top flange of the cleaning air damper according to the configuration diagram (see section 7.4.1.2).

All plant assemblies are to be checked for damage to the paint work on completion of all the assembly work.

Any damage to the paint and/or welds is to be touched up professionally.

7.3.3 Cleaning air duct work

Assembly

The relevant accident prevention regulations (DGUV Regulation 1 "Principles of Prevention" and DGUV Regulation 38 "Construction work") must be observed during the assembly work!

At locations outside Germany, the corresponding regulations in the respective country must be observed!

The individual parts may only be slung at the lugs, hooks, eyes or openings provided for this purpose!

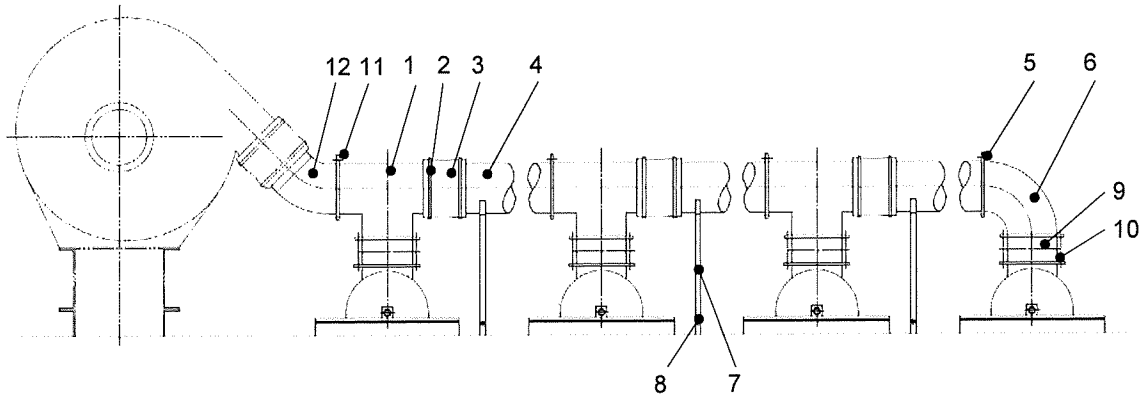

Assembly sequence:

- Place the pipe bend (6) and the T-pieces (1) on the cleaning air dampers (9) and align parallel to the front edge of the flat bag filter.
- Fasten the pipe bend (6), the T-pieces (1) and the cleaning air dampers (9) to the connecting supports using the bolts M 10 x 120 mm (10).
- Add all bolts with nuts and washers.
- Tighten all bolts.
- Remove the clamping wrench from the cleaning air valves.
- Apply sealing compound (see flange assignment plant – chapter 7.4.1.2) to the flange of the pipe bend and the T-pieces.
- Screw pipe supports (7) onto the existing consoles on the cover plate using the bolts M 10 x 25 mm (8).
- Add all bolts with nuts and washers.
- Tighten all bolts.
- Place the connecting pieces (4) of the cleaning air pipe on the pipe supports (7).
- Screw connecting pieces (4) onto the provided flange of the pipe bend (6) and the T-pieces using the bolts M 10 x 25 (5).
- Add all bolts with nuts and washers.

- Tighten all bolts.
- Push hose clips (3) onto the cleaning air pipe.
- Place connecting hoses (2) on T-pieces (1).
- Pull connecting hoses (2) tight in order to avoid cross-section constrictions.
- Fasten the connecting hoses (2) with the hose clips (3) on both sides.
- Screw the pipe bend (12) onto the T-piece using the bolts M 10 x 25 (11).
- Add all bolts with nuts and washers.
- Tighten all bolts.



All plant assemblies are to be checked for damage to the paint work on completion of all the assembly work.

Any damage to the paint and/or welds is to be touched up professionally.

7.3.4 Cleaning air fan with sound absorber

Assembly

The relevant accident prevention regulations (DGUV Regulation 1 "Principles of Prevention" and DGUV Regulation 38 "Construction work") must be observed during the assembly work!

At locations outside Germany, the corresponding regulations in the respective country must be observed!

The individual parts may only be slung at the lugs, hooks, eyes or openings provided for this purpose!

Assembly sequence:

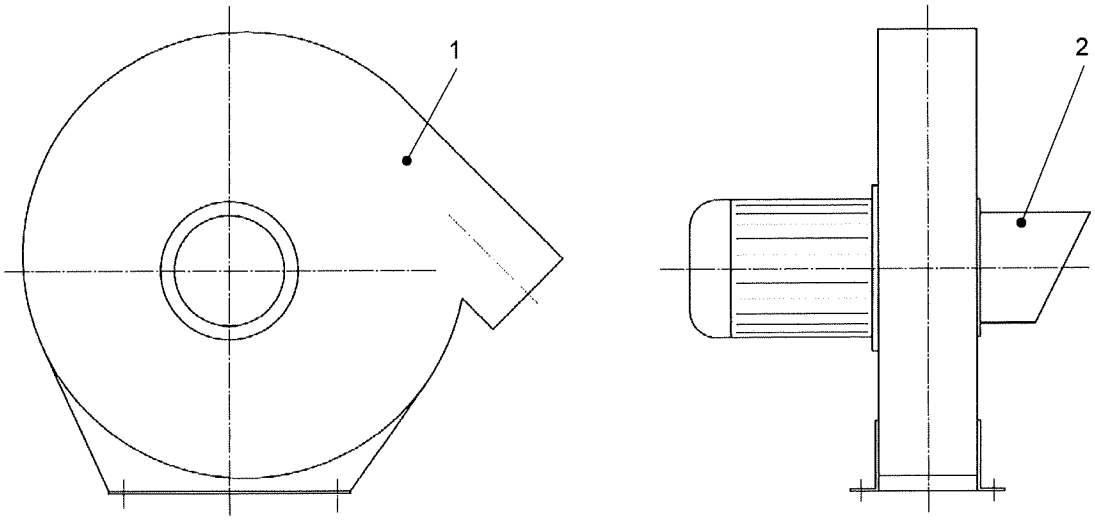

- Remove the intake guard (2) on the cleaning air radial fan (1).

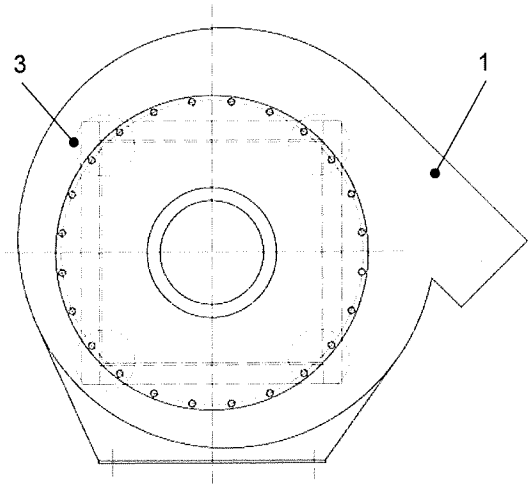

- Undo the indicated screws (3) on the cleaning air radial fan (1).

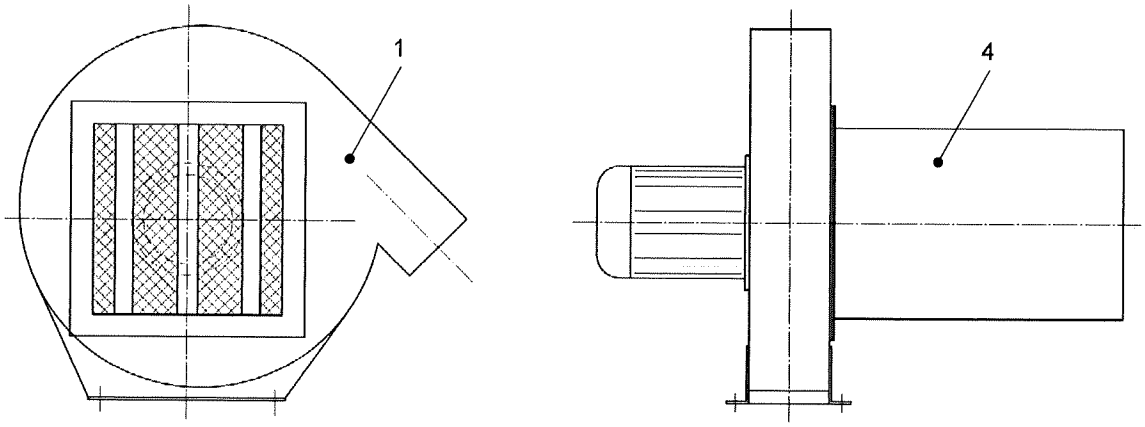

- Apply the flat sealing on the flange of the silencer (4) according to the configuration diagram (see section 7.4.1.1).
- Screw the silencer (4) onto the cleaning air radial fan (1) with the screws previously removed.

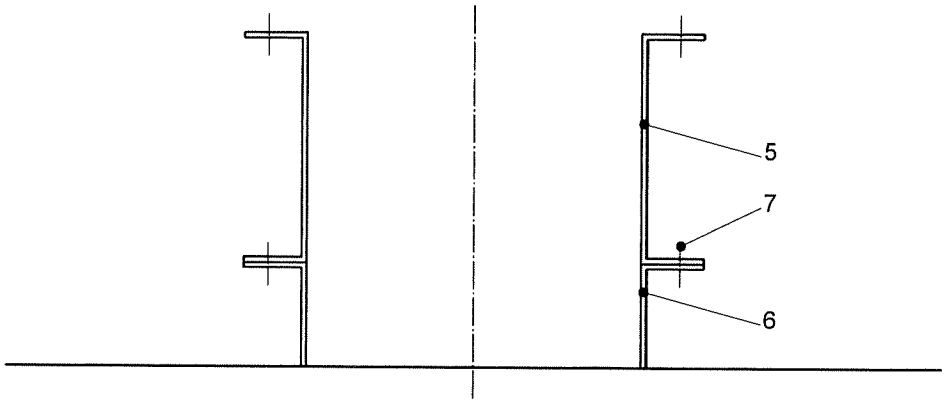

- Screw the mount (5) for the cleaning air radial fan to the existing consoles (6) with the screws M 12 x 30 mm (7).

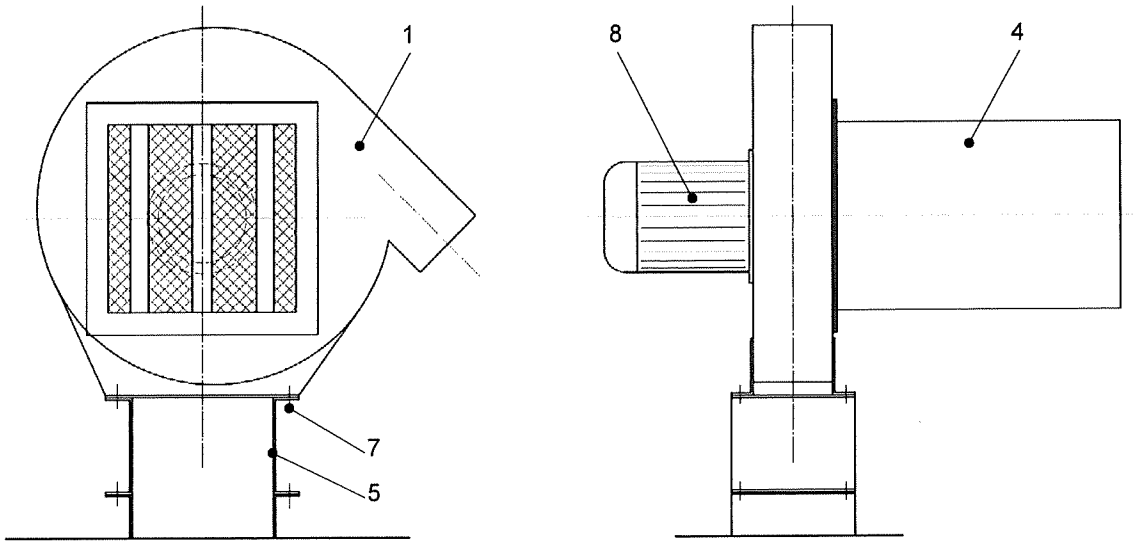

- Raise the cleaning air fan (1) with the silencer (4) using the suspension lug provided for this purpose.
- Pointing the 3-phase AC-motor (8) towards the dirty gas hood.
- Mount the cleaning air fan (1) onto the brackets (5).
- Screw the cleaning air fan (1) with screws M 12 x 30 mm (7).
- Add all bolts with nuts and washers.
- Tighten all bolts.

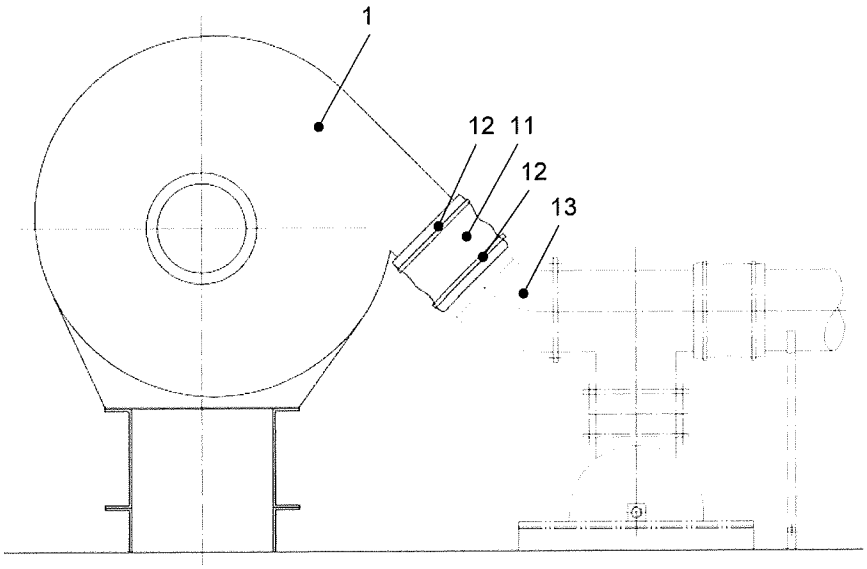

- Push hose clips (12) over pressure nozzles of the cleaning air radial fan (1) and pipe bends (13).
- Attach connecting hose (11) to pressure nozzle of the cleaning air radial fan (1) and pipe bends (13).
- Pull connecting hose (11) tight in order to avoid cross-section constrictions.
- Fasten the connecting hose (11) with the hose clips (12) on both sides.



All plant assemblies are to be checked for damage to the paint work on completion of all the assembly work.

Any damage to the paint and/or welds is to be touched up professionally.

7.3.5 Screw connection dirty gas hood

Assembly

Assembly is performed in accordance with the installation drawing.

The relevant accident prevention regulations (DGUV Regulation 1 "Principles of Prevention" and DGUV Regulation 38 "Construction work") must be observed during the assembly work!

At locations outside Germany, the corresponding regulations in the respective country must be observed!

The individual parts may only be slung at the lugs provided for this purpose!

Assembly sequence:

It must be ensured before the dirty gas hood is mounted that the top sealing flange of the filter is provided with the flat sealing (see section 7.4.1.1).

- Provide all screw connection points **X, Y** and **Z** as shown in the drawings with bolts, nuts and the corresponding washers.

The screw connection point marked **Z** is intended for earthing the plant.

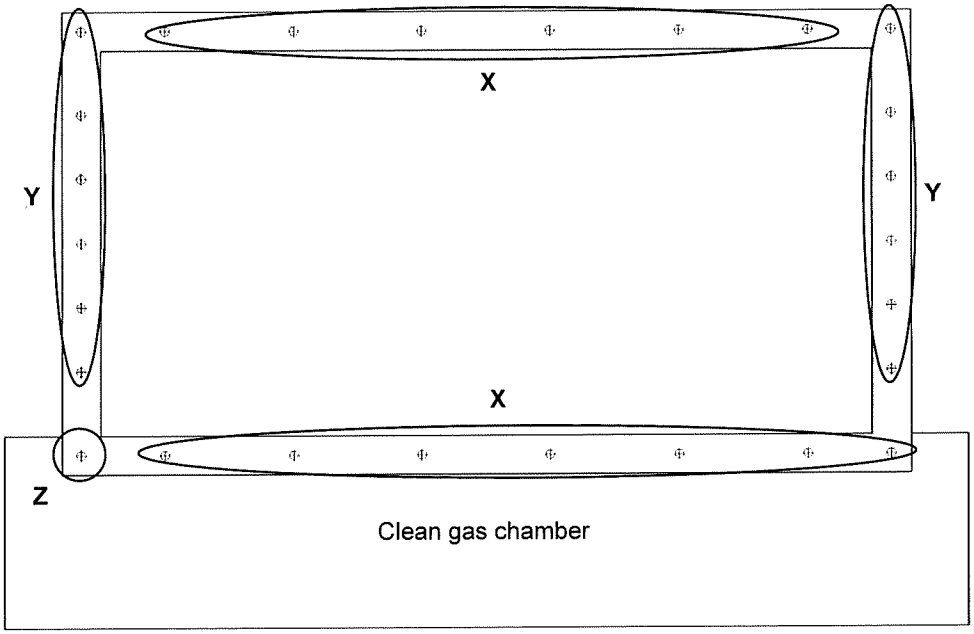

Sketch screw connection X

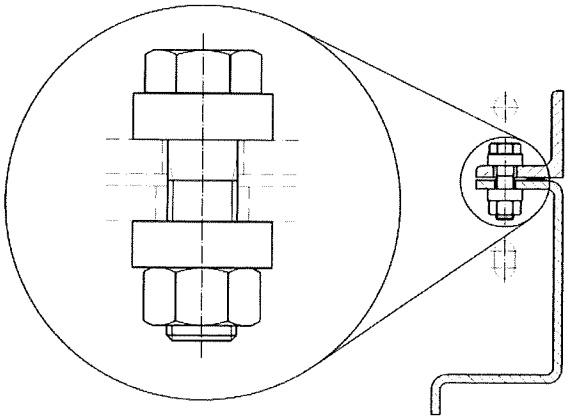

1 pc. Hexagonal screw
M12 x 45 mm
DIN 931/DIN ISO 4014
Strength class: 8.8
2 pc. Washer 13,5
thick
DIN 7989
1 pc. Hexagonal nut
M12
DIN ISO 4032
Strength class: 8.8

Sketch screw connection Y

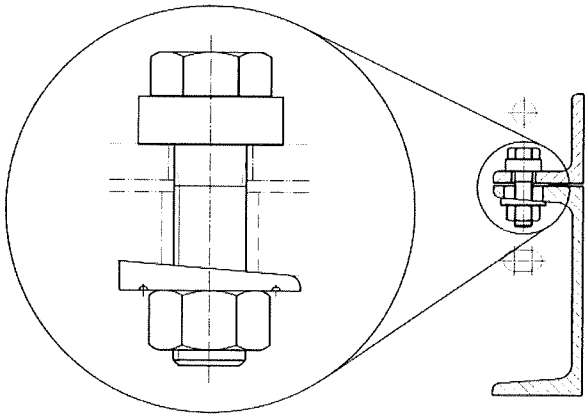

1 pc. Hexagonal screw
M12 x 45 mm
DIN 931/DIN ISO 4014
Strength class: 8.8
1 pc. Washer 13,5
thick
DIN 7989
1 pc. Washer for U-section 13,5
slant
DIN 434
1 pc. Hexagonal nut
M12
DIN ISO 4032
Strength class: 8.8

Sketch screw connection Z – Earthing the plant

In order to ensure correct earthing of the plant, use a stainless steel screw connection between the dirty gas hood and the flat bag filter.

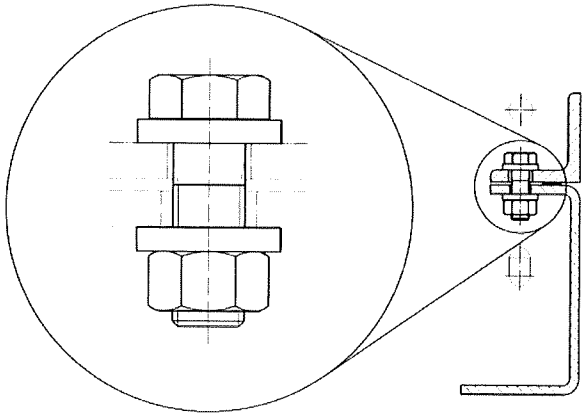

1 pc. Hexagonal screw
M12 x 45 mm
DIN 933/DIN ISO 4017
Material: stainless steel
2 pc. Lock washer 13,5
According to DIN 6797
Material: stainless steel
1 pc. Hexagonal nut
M12
DIN ISO 4032
Material: stainless steel

- Tighten all bolts.

All plant assemblies are to be checked for damage to the paint work on completion of all the assembly work.

Any damage to the paint and/or welds is to be touched up professionally.

7.4 Ductwork

7.4.1 Configuration diagram for flanges

7.4.1.1 Flat sealing

Assembly sequence:

Before applying the flat sealing, the flanges must be dry.

- Apply the flat sealing as shown (see figure) and firmly press it.

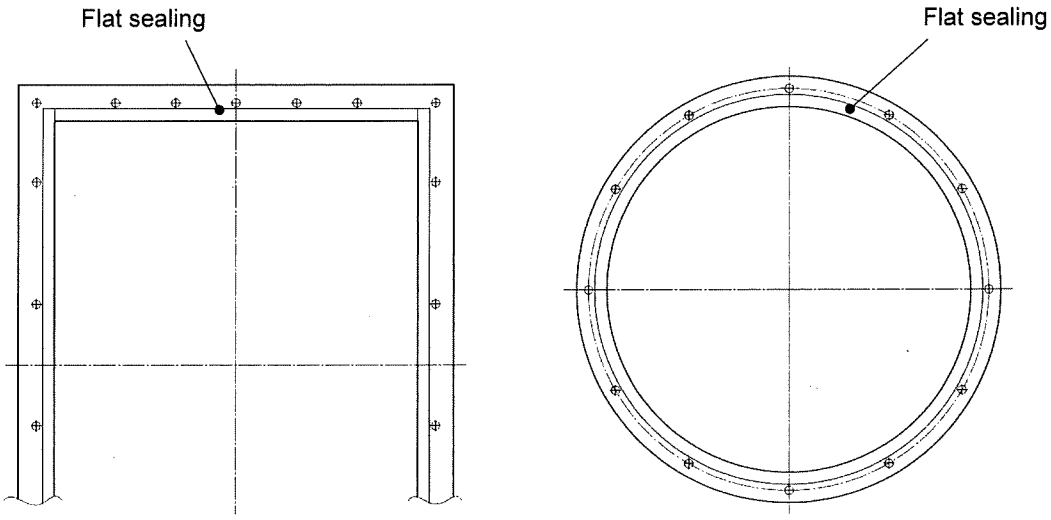

7.4.1.2 Sealing compound

Sealing of the flanges
< NW 250 only once sealing compound

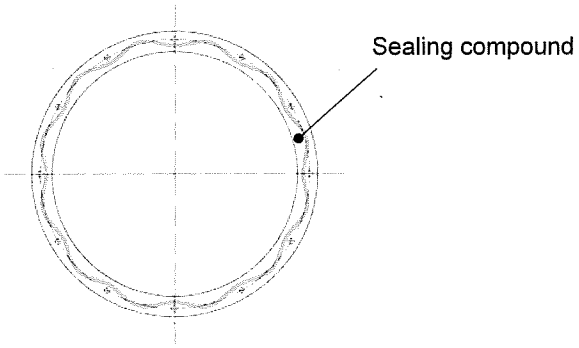

7.5 Earthing the plant

All plant parts must be conductively connected to one another and to earth potential.

Upon completion of assembly work, the complete plant must be earthed to the foundation or the steel construction.

The location of the terminal lug is defined in the foundation plan.

The type of earthing must comply with the latest valid national guidelines for the discharge of static electricity.



Earthing the plant must be carried out by a specialist firm.

Not relevant

9 Troubleshooting

Contents

9.1 Behaviour in event faults
9.2 Safety cut-out
9.3 Troubleshooting with the power supply switched on
9.4 Checklists in event of faults

9.4.1 Flat bag filter
9.4.2 Electric drives

9.1 Behaviour in event of faults



Maintenance work may only be undertaken when the machine/plant is at a standstill. The machine/plant must be disconnected and isolated from the power supply and secured to prevent inadvertent re-activation. For this purpose, switch off and lock the main switch, remove the key and affix a warning sign to the main switch.

Irrespective of the following notes, the local safety provisions always apply to the operation of the machine/plant!

Warning!

The notes on safety (see section 2), the appropriate maintenance instructions (see section10) and the suppliers' documentation (see section 12) are to be observed for repair and maintenance work!

9.2 Safety cut-out



We strongly recommend the main switch is switched off and secured to prevent inadvertent re-activation of the machine/plant during maintenance and repair work.

All work must be carried out in accordance with the relevant accident prevention regulations of the professional associations in question.

9.3 Troubleshooting with the power supply switched on

In case of malfunction of the machine/plant demanding electrical measurements (e.g. current, tension) or verification of the function of motorized parts, a fault finding with connected electrical energy sources might be necessary.

Warning!

As this method of troubleshooting is extremely dangerous, it should only be adopted if the necessary inspection cannot be performed with the plant switched off. In any case this work may only be carried out by trained specialists.

In order to minimize the risks involved with such a procedure, at least the following fundamental safety measures must be gradually taken:

- Call in additional staff whose task it is to activate one of the emergency-off buttons as soon as there is any danger.
- Put up signs with the warning "**NO ACCESS - REPAIR/MAINTENANCE WORK WHILE PLANT RUNNING**".
- Disconnect and isolate the plant from the power supply.
- Remove as few safety facilities as necessary.
- Before you switch the plant on again, make sure that no one is near the plant.
- Switch the plant on again and make the necessary observations at a safe distance from all moving and live components.
- Switch the plant off again.
- Disconnect and isolate the plant from the power supply.
- Carry out the necessary repairs and install all safety and protective facilities again.
- Check the plant and the safety system for function ability. We would point out once again that the plant may only be operated with all the safety system components in working order.

9.4 Checklists in event of faults



Any faults which occur during operation can be localized and remedied using the following table.

The manufacturers' documentation enclosed in chapter 12 must also be observed without fail here!

In the case of all the items marked with * there is an obligation to us during the guarantee period before the repairs are carried out!

9.4.1 Flat bag filter

Fault	Possible causes	Action
1. Dedusting monitoring	• Cleaning car drive failed	• Check drive motor of cleaning car (see section 9.4.2 and manufacturer's documentation in section 12) • Check chain/robe connection, if necessary replace (see section 10.2.1.5)
	• Control sequence faulty	• Check inductive sensor on filter housing • Check inductive sensor on indexing disc (deflecting station) • Check journal (1) and limit stop (2) for indexing disc (deflecting station) – the limit stop (2) must be able to move* 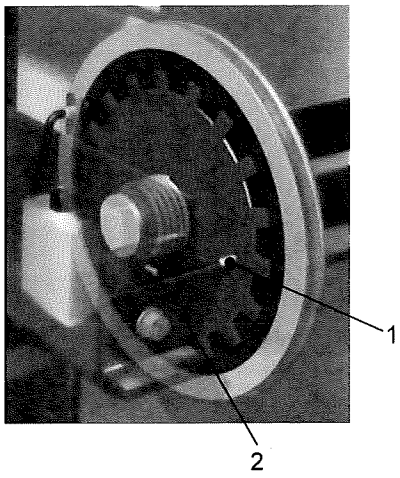 • Check pressure spring (1) on indexing disc for damage and, if necessary replace 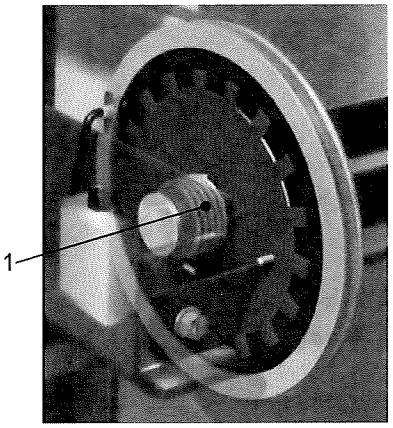

Fault	Possible causes	Action
2. Filter resistance too high	• Control sequence faulty	• see points 1
	• Cleaning air inadequate	• Check cleaning air fan for proper functioning (see manufacturer's documentation in section 12)
		• Check cleaning air valve for proper functioning*
	• Position of the cleaning car not correct	• Check indexing motion – proximity switch (1) must be positioned over one of the teeth of the indexing disc (2) Requirement: Cleaning car in parking position, i.e. journal (3) in indexing disc (2) resting on the limit stop (4) of the deflecting station 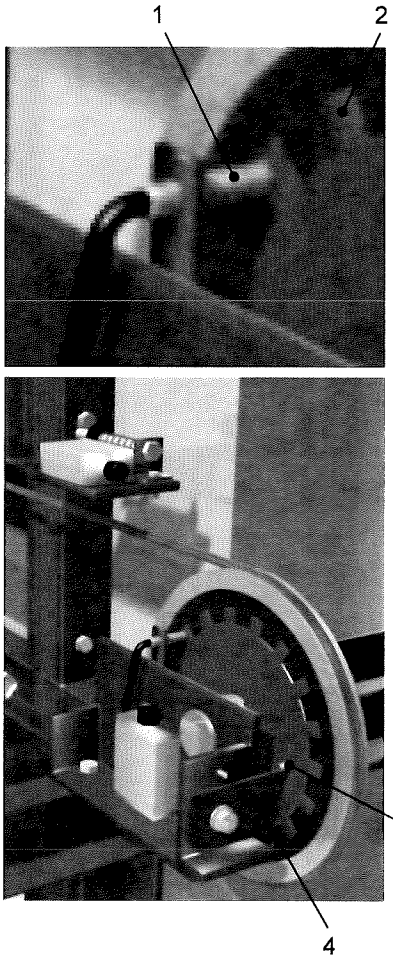
		• Check position of cleaning car (see section 10.2.1.4)
		• Check rollers of cleaning car for ease of motion and, if necessary replace
		• Check link chain and tension rope for tension and, if necessary, retighten, remove chain links or replace chain (see section 10.2.1.5)

Fault	Possible causes	Action
3. Extraction point not dust-free	• Filter resistance too high	• see points 1 and 2
	• Cleaning air fan runs erratically	• Check bearings of drive motor and, if necessary, replace
	• Cleaning air damper defective	• Check coupling insert and, if necessary, replace
		• Check damper bearing and, if necessary, replace ball bearings
	• Cleaning nozzle connection defective	• Check seal and, if necessary, replace
		• Check for ease of motion and, if necessary, replace ball bearings *
	• Cleaning car sluggish	• Check rollers for ease of motion and, if necessary, replace
	• Chain wheel defective	• Check chain wheel (drive side) for abrasion and, if necessary, replace
	• Link chain too loose	• Check link chain, if necessary, retighten, remove chain links or replace chain (see section 10.2.1.5)
	• Regulating elements in the cleaned process gas and/or polluted process gas pipelines displaced	• Re-adjust regulating elements and check for proper functioning *
	• Inspection openings or the like not closed	• Close openings
	• Main radial fan faulty	• Check drive motor (by customer)
		• Check direction of rotation
		• Check fan (by customer)

Fault	Possible causes	Action
4. Residual dust content in the cleaned process gas area too high	• Flat bag defective or the seal at flange leaking	• Using test powder and test lamp, find defective or leaking flat bags and replace (see section 10.2.1.2 and 10.2.1.3) • Check flat bag support (1) and, if necessary, replaced – Remove a flat bag and check the flat bag support through the slotted wall*

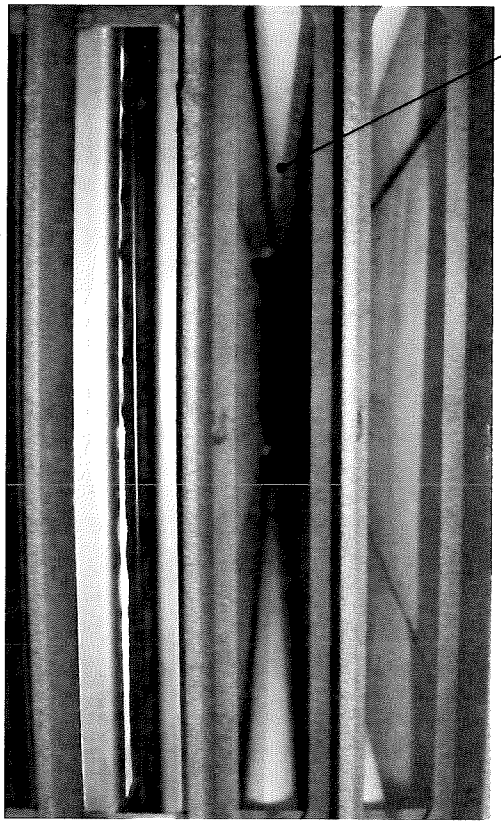

Flat bag removed

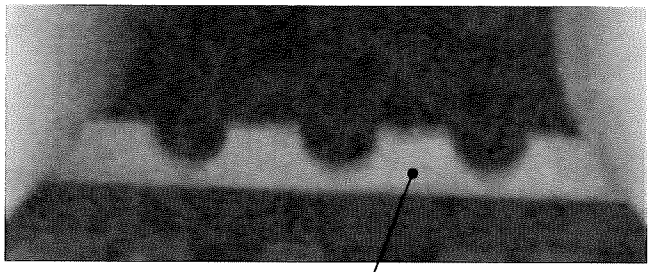

1

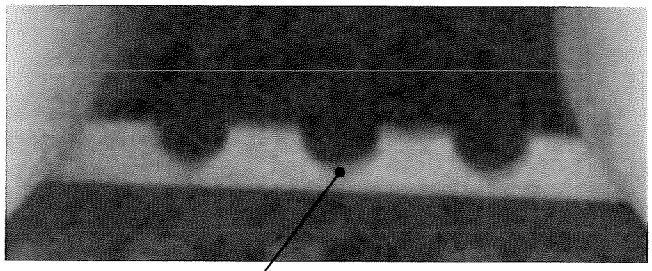

Cut-out felt section must not be compressed right down to the support

9.4.2 Electric drives

The maintenance of an electric drive must only be performed by electrical experts knowing the relevant regulations! The relevant accident prevention regulations must be observed!

Fault	Possible causes	Action
1. Motor does not run	• Interruption in supply line	• Check terminals
		• Check or measure line
	• Fault in switching unit	• Replace switching unit
	• Terminal voltage too low	• Measure terminal voltage
	• Winding has body contact	• Check with hand-driven generator or sufficiently high voltage
	• Bearing defective	• Replace bearing
	• PTC thermistor has been triggered	• Wait until motor has cooled down
	• Fault in converter	• Observe fault messages and look up in relevant handbook*
2. Motor starts sluggishly and speed too low under load	• Machine or main voltage too low	• Measure voltage
	Short circuit in coil	• Eliminate shot circuit or install new winding
	• Winding has body contact	• Check with hand-driven generator or adequately high voltage
3. 3-phase AC motor hums at standstill, not when running	• Body contact in the rotor winding	• Establish defective winding section and repair
	• Wrong connection of phases	• Check phases
	• Rotor grazes	• Have motor repaired by qualified staff
4. 3-phase AC motor becomes too warm in continuous operation	• Winding short circuit in the stator	• Have checked and rewound by qualified staff
5. Winding damage		• Have motor repaired by qualified staff
6. Safety fuses burn out or motor protection plate triggers at once	Short circuit in wire or motor	• Eliminate short circuit
	• Motor has body or motor contact	• Have motor repaired by qualified staff
	• Motor is wrongly wired	• Correct wiring

Fault	Possible causes	Action
7. 3-phase AC motor becomes too warm in continuous operation	• Load too high	• Measure power input*
	• Voltage too high or too low	• Check main voltage and voltage drop up to electric drive*
	• Single-phase instead of 3-phase operation	• Check power input of all three lines*
	• Short circuit in coil	• Check supply line for interruption and, if necessary, eliminate or have rewound
	• Ventilation impaired	• Remove dust, chips or the like from air paths
		• Re-adjust air deflectors
		• Prevent intake of warm exhaust air
	• Rotor grinds in stator	• Adjust or replace bearings
	• Foreign matter in air gap	• Dismantle rotor and clean motor
8. Jerky start	• Short circuit in the rotor winding	• Eliminate short circuit or have rewound
	• Connection to PEN conductor instead of to outer conductor	• Check connections and, if necessary, correct
9. Power input fluctuating with double slip frequency	• Interruption in winding or asymmetry of resistances in rotor or defective short-circuiter	• Measure resistances • Have motor repaired by qualified staff
10. 3-phase AC motor runs too slowly or not at all in stardelta connection high	• Load too high	• Relieve load of fan*
	• Terminal voltage too high	• Check main voltage on activation
11. Wrong direction of rotation	• Motor disconnected	• Two phases interchanged
12. 3-phase AC motor shows excessive no load current	• Terminal voltage too high	• Measure main voltage*
	• Air gap possibly increased during repairs	• Measure air gap at three points and, if necessary, set correctly

10 Maintenance

Contents

10.1 Notes on maintenance and inspection

10.1.1 Introduction
10.1.2 Notes on safety

10.2 Checklists for maintenance

10.2.1 Flat bag filter

10.2.1.1 Restarting the plant after replacing filter bags
10.2.1.2 Changing filter element
10.2.1.3 Identify defective filter bags
10.2.1.4 Position of cleaning nozzle
10.2.1.5 Check chain tension

10.3 Notes of lubrication

10.3.1 Storage of lubricants

10.4 List of lubrication points

10.4.1 Flat bag filter

10.1 Notes on maintenance and inspection

10.1.1 Introduction



The manufacturers' documentation enclosed in section 12 and the corresponding details on rating and maintenance plates must be observed and followed without fail before starting any maintenance work on vendor parts!

The contractually agreed warranty does not relieve the owner of the machine/plant of the need and obligation to carry out regular preventive maintenance from the date of commissioning onwards.

Malfunctions due to insufficient or incorrect maintenance give rise to high costs and long downtimes during which the machine/plant is not operational.

This chapter only describes the work to be undertaken within the framework of normal maintenance or when replacing wear parts.

The maintenance work is described in sufficient detail to be carried out by trained personnel familiar with such maintenance work.

The following checklists for maintenance have been drawn up for normal operation of the machine/plant. The recommended intervals are merely guideline values; they refer to the time after commissioning and are stated in operating hours. Depending on actual operating conditions, the intervals required for maintenance may differ from those recommended. You should therefore define your own maintenance requirements.

In order to avoid extended downtimes, we recommend that the most important wear and spare parts be kept in stock at all times.



Only original spare parts may be used.

When removing screws and bolts which are no longer fit for use, they must always be replaced by screws and bolts of the same quality (strength, material) and execution.

This chapter is not a reference manual for comprehensive repairs.

Our after-sales service will be only too pleased to provide you with further advice.



Dirt must regularly be removed (depending on the degree of fouling) from the surface of plant parts and from the plant area. Dust and moisture promote corrosion.

10.1.2 Notes on safety



Maintenance work may only be undertaken when the machine/plant is at a standstill. The machine/plant must be disconnected and isolated from the power supply and secured to prevent inadvertent re-activation. For this purpose, switch off and lock the main switch, remove the key and affix a warning sign to the main switch.

Visual inspections, e.g. to identify leaks or external damage, and relubrication can be undertaken during the machine/plant is in operation.

Relubrication can be carried out during operation of the machine/plant. Oil changes may only be performed when the machine/plant is at a standstill.

The applicable safety regulations for the product must be observed when handling oil, grease and other chemical substances!

Care must be exercised when handling hot fuels and auxiliaries (risk of injury due to burns or scalding), e.g. when changing the oil in geared motors!

Use personal protective equipment.

Ensure that all moving parts have been secured to prevent inadvertent movement.

Guards, such as covers and barriers, must be refitted completely and fully operational when the work is complete.

Caution must be exercised when welding – always have a fire extinguisher nearby!

The machine/plant must always be switched off before starting any cutting, grinding or welding work.

The following points must be noted when working on the electrical equipment:
Even when the main switch on the control cabinet has been secured in the OFF position, the connecting terminals of the main switch and interior lighting of the control cabinet are still live. These terminals are marked accordingly in the control cabinet.

Work on the electrical equipment may only be undertaken by duly qualified electricians.



The safety instructions (see section 2), the safety instructions contained in this section, the instructions in the manufacturers' documentation (see section 12) and the corresponding (BGV) regulations issued by employers' liability insurance associations must be observed when carrying out maintenance work!

Ensure that these documents has been read and understood by everyone entrusted with maintenance work.

At locations outside Germany, the corresponding regulations in the respective country must be observed!

Personal safety is the most important factor in all maintenance work.

Before starting any maintenance work, the full scope of the work must be known so that its sequence can be planned in detail. Ensure that responsibility for the work only rests with one person.

If any parts of the machine/plant are removed, all open holes, bearings, connections, etc. must immediately be covered with appropriate materials to prevent dirt entering. During extended breaks in operation, all dismantled parts must be protected from dirt, corrosion and damage.

10.2 Checklists for maintenance

10.2.1 Flat bag filter FS

Maintenance work may only be undertaken when the machine/plant is at a standstill. The machine/plant must be disconnected and isolated from the power supply and secured to prevent inadvertent re-activation. For this purpose, switch off and lock the main switch, remove the key and affix a warning sign to the main switch.

Interval	Control point/Maintenance notes
Only in the first month after initial commissioning Every 170 duty hours or weekly	• Link chain chain • Check chain tension and, if necessary, retighten (see section 10.2.1.5)

Every 2160 duty hours
or
every 3 month
	• Filter bag
	  • Visual inspection of the cleaned process gas chamber for dust discharge on the slotted wall
	  • Replace defective filter bags (see section 10.2.1.3)
	• Cleaning nozzle connection
	  • Check for ease of motion and, if necessary, replace ball bearings
	When cleaning air radial fan in operation:
	  • Check for leaks at the cleaning nozzle connection and, if necessary, replace seals
	• Cleaning nozzle sliding lining
	  • Check for abrasion and damage, if possible in the end position of the cleaning car, and, if necessary, replace
	  • Check distance between slotted wall and cleaning nozzle sliding lining and, if necessary, re-adjust (see section 10.2.1.4)
	• Cleaning car
	  • Check rollers for ease of motion and abrasion and, if necessary, replace
	  • Re-adjust rollers in case of too large clearance
	• Drive station
	  • Check chain wheel for abrasion and, if necessary, replace
	• Deflecting station
	  • Check indexing disc for proper functioning
	• Link chain chain
	  • Check for abrasion and damage and, if necessary, replace
	  • Check chain tension and, if necessary, retighten (see section 10.2.1.5)
	• Traction rope
	  • Check for abrasion and damage and, if necessary, replace

10.2.1.1 Restarting the plant after replacing flat bags

Before restarting the plant after replacing all the flat bags, slaked lime ($CaOH_2$) must first be added to the filter system in order to protect the flat bags.

The filter cleaning function must not be in operation while adding the lime ($CaOH_2$). The filter cleaning and the dust discharge functions must be switch off.

Then switch on the plant. Ensure that a sufficiently large negative pressure is built up.

Lime ($CaOH_2$) is then added upstream of the flat bag filter until a layer of dust has formed on the surface of the flat bag (approx. 25 – 30 kg per filter chamber).

After adding the lime ($CaOH_2$) the plant must remain in operation with deactivated filter cleaning function for approx. 1 to 2 hours so that the added lime ($CaOH_2$) can settle in the pores of the flat bags. Then the filter cleaning and the dust discharge functions can be switched on again.

10.2.1.2 Changing filter element

Maintenance work may only be undertaken when the machine/plant is at a standstill. The machine/plant must be disconnected and isolated from the power supply and secured to prevent inadvertent re-activation. For this purpose, switch off and lock the main switch, remove the key and affix a warning sign to the main switch.

Disassembly:

- Before changing the filter elements, make sure to place the supplied covering sheets in the clean gas room, referring to drawing no. P01411-01-F27025
- Hit the upper edge of the leg spring (5) slightly with the stick of a hammer until the leg spring has worked loose

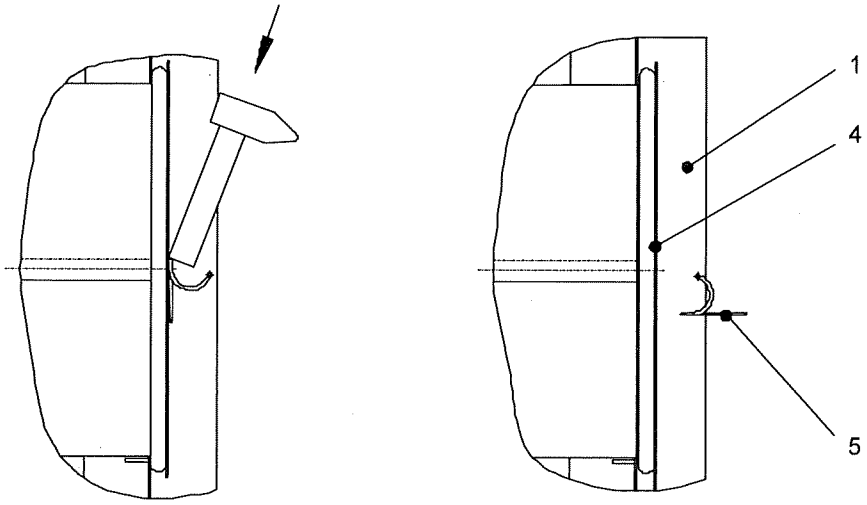

- Press the leg spring manually together and take it out of the slotted wall (1)
- Pull out the clamping frame (4)
- Pull the filter element (flat bag (2) and spacer mat (3)) completely out of the slotted wall

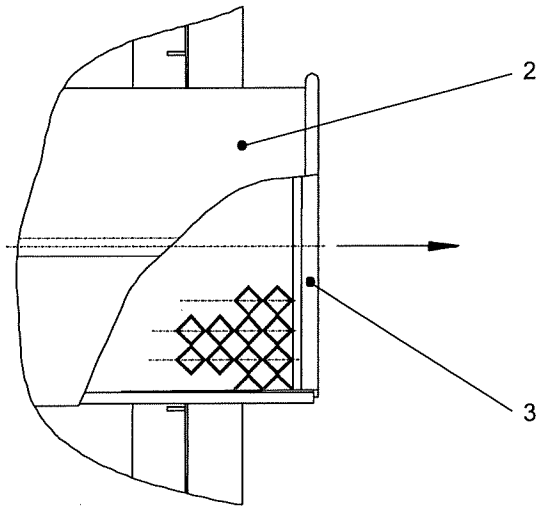

Assembly:

- Put the flat bag (1) completely on the spacer mat (2)

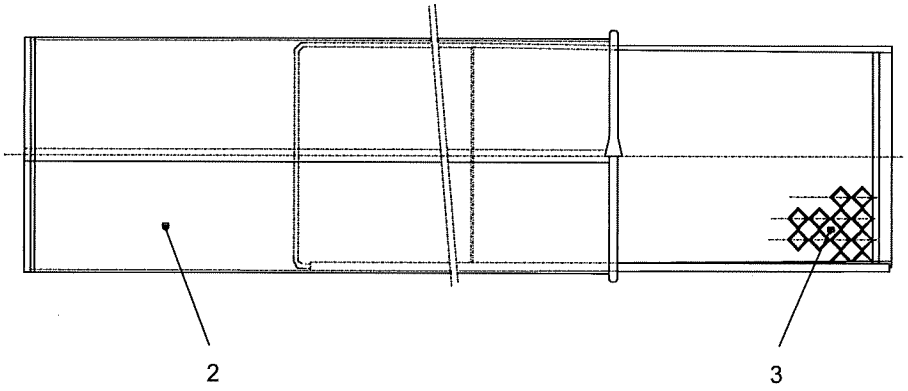

- Push the filter element (flat bag + spacer mat) through the slotted wall into the dusty gas chamber until the filter element lies on the flat bag support (6)

The outside overlay (seam) of the flat bag has to show to the bottom!

Please make sure, that the filter element lies in the right support section of the flat bag support (for example third slot from the left - third support section of the flat bag support)!

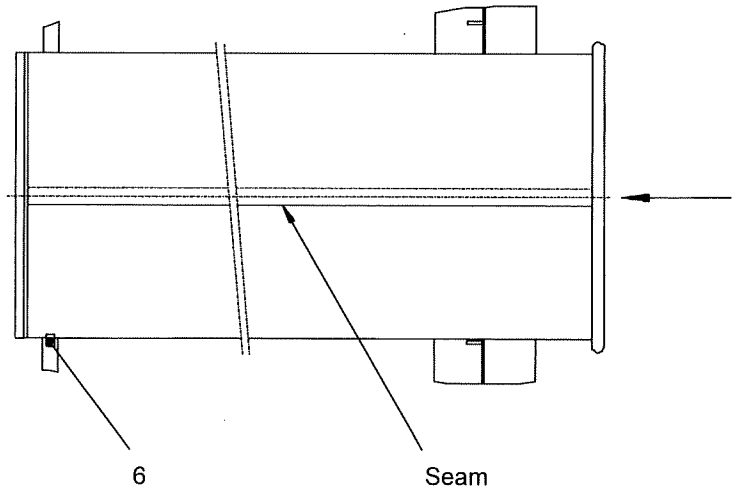

- Press the clamping frame (4) between distance mat (3) and open end of the flat bag (2) or put the filter bag on the clamping frame

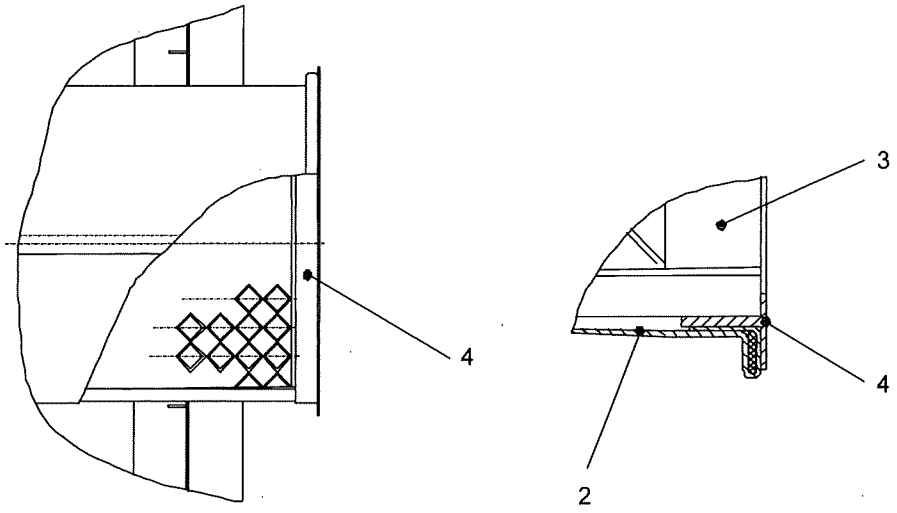

- Push the filter element completely into the slotted wall (1)
- Press the leg spring (5) manually together and clamp it staggered into the bores of the reinforcements of the slotted wall
- Depress it with the lever tool (7) until it lies completely on the clamping frame

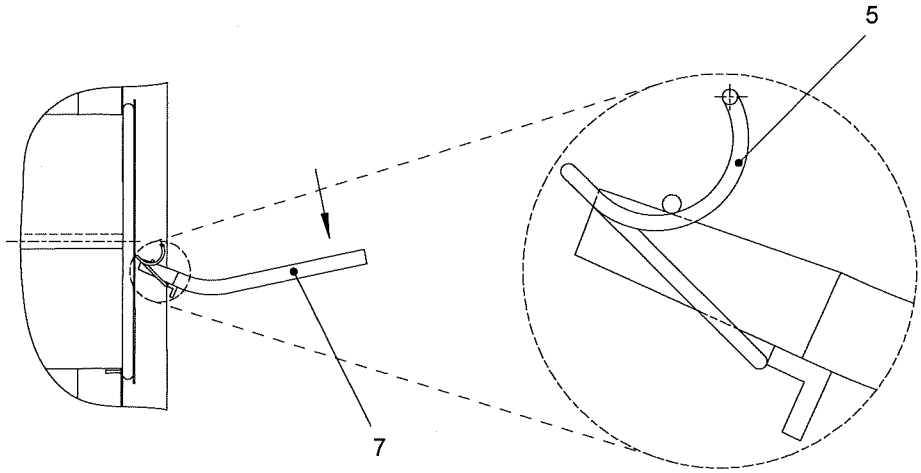

- Adjust the leg spring (5) from below by slight strikes with the stick of a hammer until the upper edge of the leg spring lies below the swivelling point

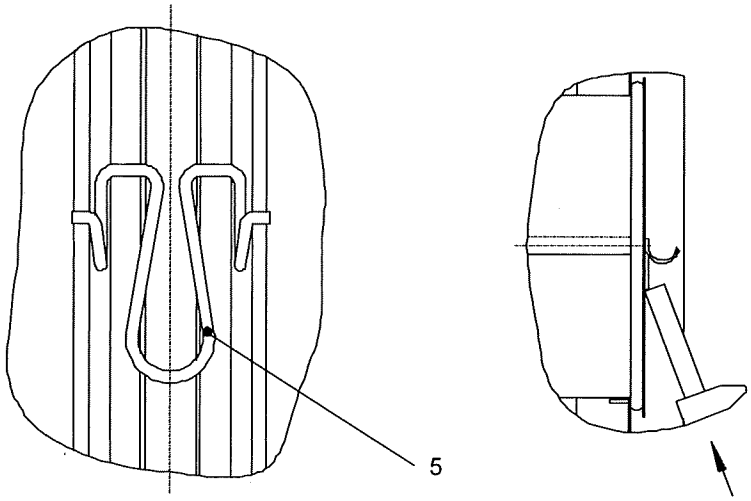

10.2.1.3 Identify defective flat bags

Procedure:

The plant must be in operation. Ensure that a sufficiently high negative pressure is present so that the test powder can reach all flat bags. The preset negative pressure is usually sufficient for this purpose.

1. Switch off filter cleaning (switch operating element **„Dust evacuation MANUAL-AUTO“** on control cabinet to position **„MANUAL“** and switch operating element **„Cleaning MANUAL“** to position **„0“**).

If filter cleaning is switched off, escaping test powder will not be swirled and it will consequently become impossible to identify defective flat bags.

2. Fill test powder into the inspection door of the dust collection hopper or of the dirty gas duct work upstream of the flat bag filter or of the cooler (ratio: 1 kg/400 m² filter area).
3. Switch off plant.
4. Open the housing doors and examine the clean gas chamber and slotted wall of the flat bag filter with the test lamp (UV).

Each flat bag is defective where you can observe the test powder on the slotted wall or the clamping frame. If flat bags are defective, they have to be replaced immediately.

5. Switch filter cleaning on again (switch operating element **„Dust evacuation MANUAL-AUTO“** on control cabinet to position **„AUTO“**)
6. The plant can be switched on again.

Renewed inspection with test powder cannot be performed immediately after installing a new flat bag. This is only possible after approx. 100 hours of operation, so that an auxiliary filter layer can form on the flat bag.

Powder of a different colour should be used when re-inspecting the flat bags with test powder, as the test powder remains visible for 2 – 3 months.

10.2.1.4 Positioning the cleaning nozzle

Maintenance work may only be undertaken when the machine/plant is at a standstill. The machine/plant must be disconnected and isolated from the power supply and secured to prevent inadvertent re-activation. For this purpose, switch off and lock the main switch, remove the key and affix a warning sign to the main switch.

To position the cleaning nozzle, the cleaning car must be parked in its parking position on the deflecting side of the flat bag filter.

The plant must be switched off before starting this work.

Two points must be noted when positioning the cleaning nozzle in front of the slotted wall:

- Distance between cleaning nozzle and reinforcement of the slotted wall
- Vertical orientation

Procedure – Set the distance dimension:

- Measure the distance between cleaning nozzle (2) and reinforcement of the slotted wall (1) (see diagram) at the upper and lower attachments (4) on the cleaning car. The value must not exceed 82 mm.

- If the value is greater than 82 mm, undo the nuts (3) on the attachments (4) of the cleaning car and secure the cleaning nozzle (2) accordingly.

- Retighten the nuts (3).

1 Reinforcement of the slotted wall
2 Cleaning nozzle
3 Nuts
4 Attachment of the cleaning nozzle

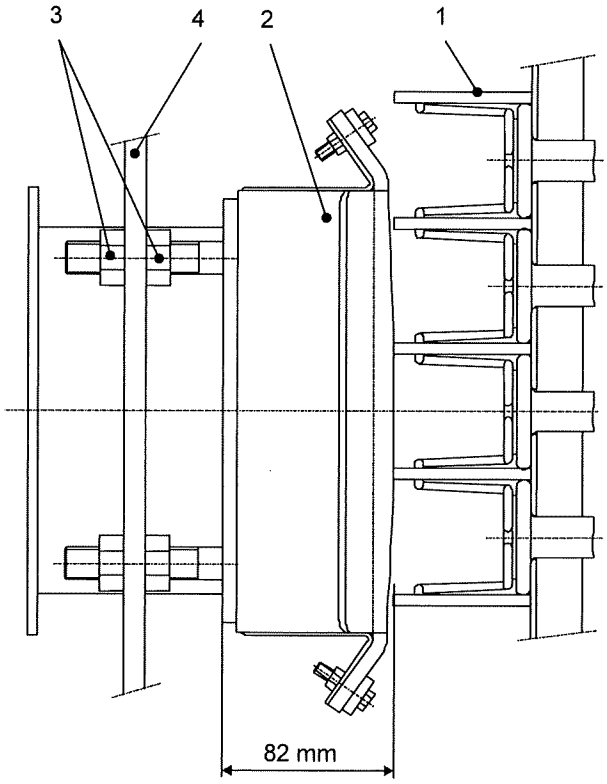

Procedure – Set the vertical orientation:

1 Cleaning nozzle
2 Cover of inspection opening
3 Nuts

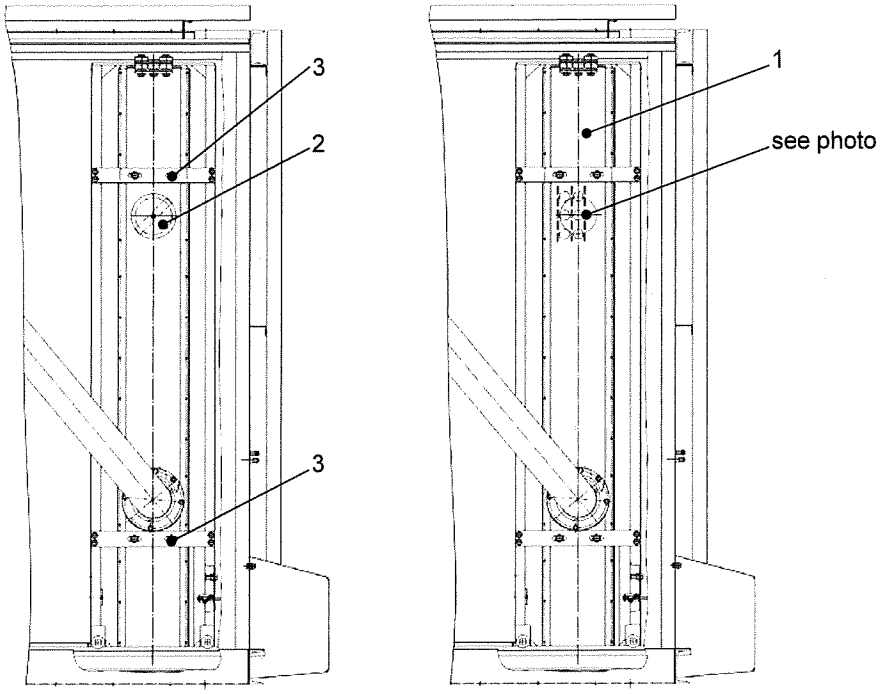

- Remove cover of inspection opening (2).
- Check the position of the cleaning nozzle (1) in accordance with the round openings in the slideway lining of the cleaning nozzle.

The round openings in the cleaning nozzle must be centred in front of the flat bag.

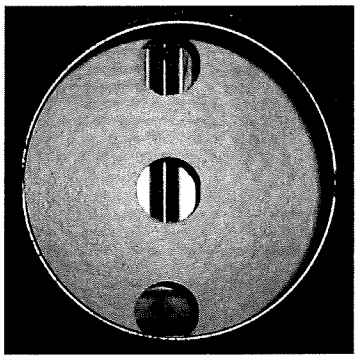

- Undo nuts (3).
- Align cleaning nozzle (1).

The cleaning nozzle (1) must be vertical.

- Retighten nuts (3).
- Refit cover on inspection opening (2).

10.2.1.5 Check chain tension

Maintenance work may only be undertaken when the machine/plant is at a standstill. The machine/plant must be disconnected and isolated from the power supply and secured to prevent inadvertent re-activation. For this purpose, switch off and lock the main switch, remove the key and affix a warning sign to the main switch.

The link chain is tensioned automatically by a spring device on the cleaning car. When the spring reaches its maximum extension, however, the chain is no longer tensioned automatically.

Procedure:

- Switch off the plant.

To check the chain tension, the cleaning car must be in its parking position on the deflecting side of the flat bag filter.

Warning!

The spring (3) must always be completely compressed.

- If the spring (3) is no longer completely compressed, it must be pressed together again completely with the aid of the nuts at the end of the threaded bar (4).
- If the tensioning travel of the threaded bar (4) is no longer sufficient to tension the link chain (1) and compress the spring (3) completely, the threaded bar (4) must be unscrewed and one chain link removed.

If this still does not suffice, further chain links must also be removed.

- Tension the link chain (1) and pull rope (2) with the aid of the nuts at the end of the threaded bar (4).
- Compress the spring (3) completely with the aid of the nuts on the threaded bar (4).

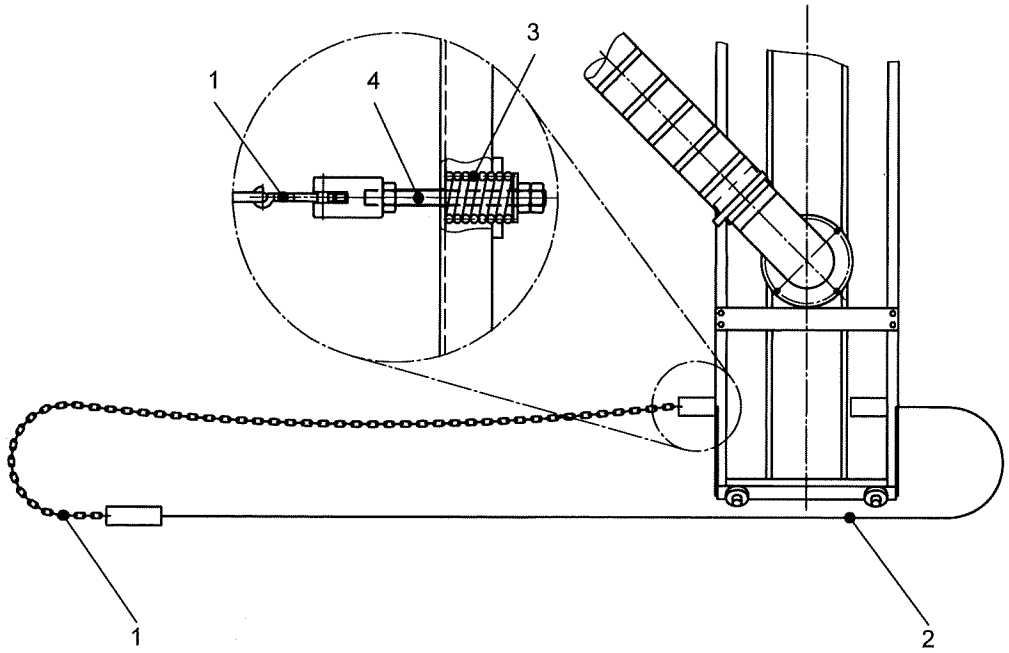

10.3 Notes of lubrication



Relubrication can be carried out during operation of the machine/plant. Oil changes may only be performed when the machine/plant is at a standstill!

Careful lubrication is necessary for trouble-free operation of the plant and prevents expensive repairs. This applies in particular to the proper lubrication of all bearings.

With a lack of lubrication, the service life of the bearings is inadequate, resulting in failures.

Lubrication must be carried out in accordance with the times specified in the list of lubrication points and with the specified lubricants and quantities of lubricant. The times given relate to the time after commissioning.

The recommended lubricants do not, of course, exclude the use of lubricants of other suppliers with the **same** properties.



The instructions of the manufacturer on the rating or maintenance plate on the drives must be observed and followed without fail. Please refer the operating manual from the manufacturer in section 12 for more information about the lubrication of components!



When handling oils, greases and other chemical substances, observe the safety regulations applicable to the product in question!

Take care when handling hot process materials (risk of burns or scalds), for example when changing the oil of gear motors!

Use personal protective equipment!

10.3.1 Storage of lubricants

Lubricants such as oils and greases are to be kept in clean, closed containers (tins, cans, drums) to prevent the ingress of dust and moisture and to ensure that the oxidation effect of air is minimised. The storage location is to be dry and cool.

10.4 List of lubrication points

10.4.1 Flat bag filter FS

When handling oils, greases and other chemical substances, observe the safety regulations applicable to the product in question!

Take care when handling hot process materials (risk of burns or scalds), for example when changing the oil of gear motors!

Wear personal protective equipment!

Relubrication can be carried out during operation of the machine/plant. Oil changes may only be performed when the machine/plant is at a standstill!

The instructions of the manufacturer on the rating or maintenance plate on the drives must be observed and followed without fail. Please refer the operating manual from the manufacturer in section 12 for more information about the lubrication of components!

Lubrication point		Lubrication		Lubricant			Remarks
Item	Component	Type[1]	Interval	DIN-No.	Designation	Quantity	
1	Gear motor cleaning car	W	17 500 duty hours or every 2 years	CLP220	HP gear oil Shell Omala S2 G220	1,7 l	To manufacturer's specifications(see section 12)

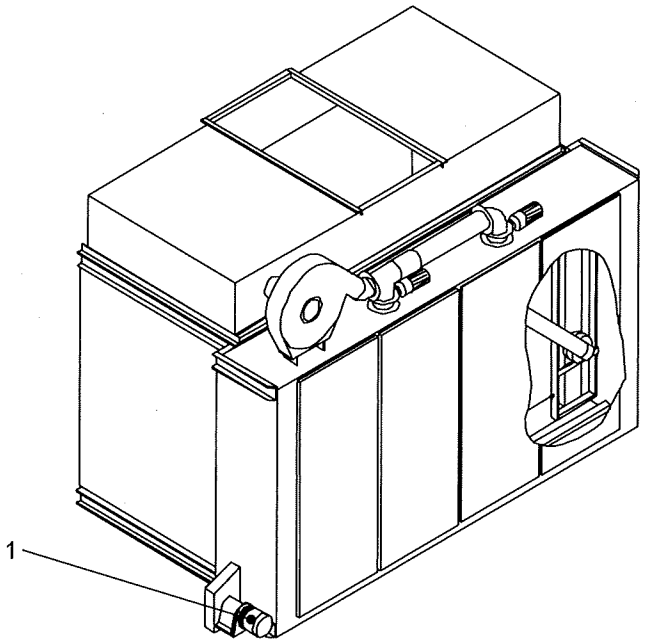

1) N = Regrease W = Oil change

11 Spare parts stock and after-sales service

Contents

11.1 Spare parts stock
11.2 Spare parts and after-sales service address
11.3 Spare parts lists
11.4 Sketches for the spare parts lists

11.1 Spare parts stock

An important precondition for the continual functioning and operability of the plant is a stock of the most important wear and spare parts at the installation site.

Please use the spare parts lists and the corresponding sketches to order spare parts.

We only assume a warranty for the original spare parts we have supplied.

We would like to expressly point out that spare parts and accessories which we have not supplied have not been tested and approved by us, either. The installation and/or use of such products can therefore, under certain circumstances, have a negative impact on the specified properties of the plant and thus reduce the active and/or passive safety measures. We shall assume no liability or warranty for damage resulting from the use of non-original spare parts and accessories.

In order to ensure prompt and smooth processing and to avoid time-consuming queries and incorrect deliveries, the following data is to be specified when ordering spare parts:

- Plant no.
- Type of assembly
- Designation
- Item no.
- Spare parts list no.
- Quantity
- Mode of shipment
- Address for delivery and invoice
- Required delivery time

11.2 Address of spare parts and after-sales service

Nederman MikroPul GmbH
Industriestr. 9 D-77948 Friesenheim 1
Postfach 27 D-77944 Friesenheim 1
✆ : +49 (0)7821-966-0
Fax: : +49 (0)7821-966-245

Customers support hotline:
✆ : +49 (0)7821-966-291

Spare parts service:
✆ : +49 (0)7821-966-237
Fax : +49 (0)7821-966-218
Email: service.friesenheim@nederman.de

11.3 Spare parts lists

D11 3100 Flat bag filter complete

D11 3101 Cleaning air damper complete – motor operated
D11 3104 Cleaning air radial fan complete

11.4 Sketches for the spare parts lists

D11 4100 Flat bag filter FS
D11 4105 Flat bag installation
D11 4106 Flat bag support
D11 4107 Cleaning hose FS
D11 4109 Telescopic pipe FS
D11 4110 Cleaning nozzle
D11 4111 Cleaning nozzle connection
D11 4112 Cleaning car complete with chain/rope drive FS
D11 4114 Running rails and rollers FS
D11 4116 Drive station FS
D11 4118 Deflecting station FS
D11 4124 Cleaning air damper – motor operated

SPARE PARTS LIST

Pos.	Identity no.	Total quantity[1]	Quantity on stock[1]	Designation/Information		Sketch	Item no.	Type V/R[2]	Require stage[3]			Notes
1		1540		Flat bag Size: 4/2,2		D11 4105	5114356	V	I			
2		1540		Spacer mat Size: 4/2,2		D11 4105	5108440	R	II			
3		1540		Clamping frame		D11 4105	5107867	R	III			
4		1540		Leg spring		D11 4105	5100148	R	III			
9		77		Support for flat bag complete Size: 1,0		D11 4106	50110701	R	III			
15		11		Door sealing Size: 1,0		D11 4100	5108172	R	III			
20		4		Sealing		D11 4109	5117564	R	III			
21		4		Telescopic pipe top		D11 4109	5116325	R	III			
22		4		Telescopic pipe bottom		D11 4109	5116326	R	III			
23		8		Sealing		D11 4109	5116500	R	III			

Designation	Type and size	Plant no.:	Spare parts list no.:	Date: 18.09.2017
Flat bag filter complete	**FS722/11,0**	**P01411**	**D11 3100**	Page: 1
	Item no.:	Project no.: **P01411-01**	Revision no.: **01**	of: 4

1) Total quantity = Installed quantity
Quantity on stock = recommended quantity on stock
2) V = Wear parts
R = Spare parts
3) I = stock keeping absolutly necessary (very important part)
II = stock keeping recommended (important part)
III = stock keeping not absolutly necessary
4) Delivery time in weeks
5) Price valid until:

SPARE PARTS LIST

Pos.	Identity no.	Total quantity[1]	Quantity on stock[1]	Designation/Information		Sketch	Item no.	Type V/R[2]	Require stage[3]			Notes
24		4		Cleaning nozzle sliding lining		D11 4110	50108470	V	I			
25		4		Cleaning nozzle connection		D11 4110	5116438	R	III			
27		4		Felt strip Size: 8 x 6 x 585 mm		D11 4111	5100164	V	I			
28		8		Deep-groove ball bearing Type: 6004.C4.COMP2		D11 4111	5108997	V	I			
30		1		Link chain Type: p=59 S HF; L = 3953 mm		D11 4112	5112024	V	I			
31		1		Traction rope Size: Ø 12 x 13747 mm		D11 4112	5112276	V	I			
32		1		Set of attachment materials		D11 4112	5108923	V	I			
33		16		Roller complete bottom		D11 4112 D11 4114	50116732	V	I			
34		4		Roller complete top with reception device		D11 4112 D11 4114	5111474	V	I			
35		1		Running rail bottom		D11 4114	50111382	V	III			

Designation	Type and size	Plant no.:	Spare parts list no.:	Date: 18.09.2017
Flat bag filter complete	**FS722/11,0**	**P01411**	**D11 3100**	Page: 2
	Item no.:	Project no.: **P01411-01**	Revision no.: **01**	of: 4

1) Total quantity = Installed quantity; Quantity on stock = recommended quantity on stock
2) V = Wear parts; R = Spare parts
3) I = stock keeping absolutly necessary (very important part); II = stock keeping recommended (important part); III = stock keeping not absolutly necessary
4) Delivery time in weeks
5) Price valid until:

SPARE PARTS LIST

Pos.	Identity no.	Total quantity[1]	Quantity on stock[1]	Designation/Information		Sketch	Item no.	Type V/R[2]	Require stage[3]			Notes
36		1		Running rail top		D11 4114	50116429	V	III			
37		1		Gear motor for cleaning car drive Typ: BG 40 Z-11/DV08 MA4 B 3; 0,30 kW; 6,6min^{-1}; 460 V; 60 Hz		D11 4116	5191588	R	III			see section 12
38		1		Chain wheel for drive station		D11 4116	5110783	V	I			
39		1		Pulley for deflecting station		D11 4118	5105516	R	III			
40		1		Indexing disc for deflecting station		D11 4118	5104512	R	III			
41		2		Pressure spring for deflecting station		D11 4118	5109267	R	III			
42		1		Proximity switch Type: IGS212 for deflecting station		D11 4118	48901110	R	I			
43		2		Deep-groove ball bearing Type: 6006 - 2 RS for deflecting station		D11 4118	5100059	V	I			
44		1		Deep-groove ball bearing Type: 6001 - 2 RS for deflecting station		D11 4118	5100061	V	I			
45		2		Indexing bolt		D11 4118	5107477	R	III			

Designation	Type and size	Plant no.:	Spare parts list no.:	Date: 18.09.2017
Flat bag filter complete	**FS722/11,0**	**P01411**	**D11 3100**	Page: 3
	Item no.:	Project no.: **P01411-01**	Revision no.: **01**	of: 4

1) Total quantity = Installed quantity; Quantity on stock = recommended quantity on stock
2) V = Wear parts; R = Spare parts
3) I = stock keeping absolutly necessary (very important part); II = stock keeping recommended (important part); III = stock keeping not absolutly necessary
4) Delivery time in weeks
5) Price valid until:

SPARE PARTS LIST

Pos.	Identity no.	Total quantity[1]	Quantity on stock[1]	Designation/Information		Sketch	Item no.	Type V/R[2]	Require stage[3]			Notes
46		1		Proximity switch drive side Type: IGS212		D11 4118	48901110	R	I			
47		1		Proximity switch deflecting side Type: IGS212		D11 4118	48901110	R	I			
48		2		Pressure spring Size.: 1,6 x 17,6 x 51,1 mm for proximity switch		D11 4118	5100144	R	III			
49		4		Cleaning air damper complete		D11 4100	5191633	R	III			see D11 3101
50		4		Connection hose Size: Ø 183 x 250 mm		D11 4100	5100039	R	III			
51		1		Cleaning air radial fan Type: RFS 5,5; GL 135; 50,0 Bm³/min		D11 4100	5117559	R	III			see D11 3104
52		1		Set covering sheets for clean gas room			5194638					See P01411-01-F27025A

Designation	Type and size	Plant no.:	Spare parts list no.:	Date: 18.09.2017
Flat bag filter complete	**FS722/11,0**	**P01411**	**D11 3100**	Page: 4
	Item no.:	Project no.: **P01411-01**	Revision no.: **01**	of: 4

1) Total quantity = Installed quantity; Quantity on stock = recommended quantity on stock
2) V = Wear parts; R = Spare parts
3) I = stock keeping absolutly necessary (very important part); II = stock keeping recommended (important part); III = stock keeping not absolutly necessary
4) Delivery time in weeks
5) Price valid until:

SPARE PARTS LIST

Pos.	Identity no.	Total quantity[1]	Quantity on stock[1]	Designation/Information		Sketch	Item no.	Type V/R[2]	Require stage[3]			Notes
1		1		Cleaning air valve housing		D11 4124	5108277	R	III			
2		2		Deep-groove ball bearing Type: 61804 - 2 RS 1		D11 4124	5107720	V	I			
3		1		Gear unit rotary field magnet Type: BG06-11/DWU06LA08 B 7/IV/A; 79 min^{-1}; 460 V; 60 Hz		D11 4124	5191625	R	III			see section 12
4		1		Torsional flexible coupling complete Type: AR 28 (contains item 5)		D11 4124	50115004	R	III			
5		1		Coupling insert 55° Shore for Type: AR 28		D11 4124	5115161	V	I			
6		1		Holding journal complete		D11 4124	5108253	R	III			
7		1		Flap		D11 4124	5105558	R	III			
8		1		End shaft		D11 4124	5108247	R	III			

Designation	Type and size	Plant no.:	Spare parts list no.:	Date: 18.09.2017
Cleaning air damper complete motor operated		**P01411**	**D11 3101**	Page: 1 of: 1
	Item no.: **5191633**	Project no.: **P01411-01**	Revision no.: **00**	

1) Total quantity = Installed quantity; Quantity on stock = recommended quantity on stock
2) V = Wear parts; R = Spare parts
3) I = stock keeping absolutly necessary (very important part); II = stock keeping recommended (important part); III = stock keeping not absolutly necessary
4) Delivery time in weeks
5) Price valid until:

MIKROPUL Nederman

SPARE PARTS LIST

Pos.	Identity no.	Total quantity[1]	Quantity on stock[1]	Designation/Information		Sketch	Item no.	Type V/R[2]	Require stage[3]			Notes
1		1		3-phase AC motor Type: KTE 132 S 2 KT IE3 Ulcsa B 5; 5,5 kW; 3000 min^{-1}; 460 V; 60			5191655	R	III			see section 12

Further spare parts can be found in the manufacturer's documentation in section 12!

Designation	Type and size	Plant no.:	Spare parts list no.:	Date: 18.09.2017
Cleaning air radial fan complete	**RFS 5,5**	**P01411**	**D11 3104**	Page: 1
	Item no.:	Project no.:	Revision no.:	of: 1
	5117559	**P01411-01**	**00**	

1) Total quantity = Installed quantity; Quantity on stock = recommended quantity on stock
2) V = Wear parts; R = Spare parts
3) I = stock keeping absolutly necessary (very important part); II = stock keeping recommended (important part); III = stock keeping not absolutly necessary
4) Delivery time in weeks
5) Price valid until:

MIKROPUL Nederman

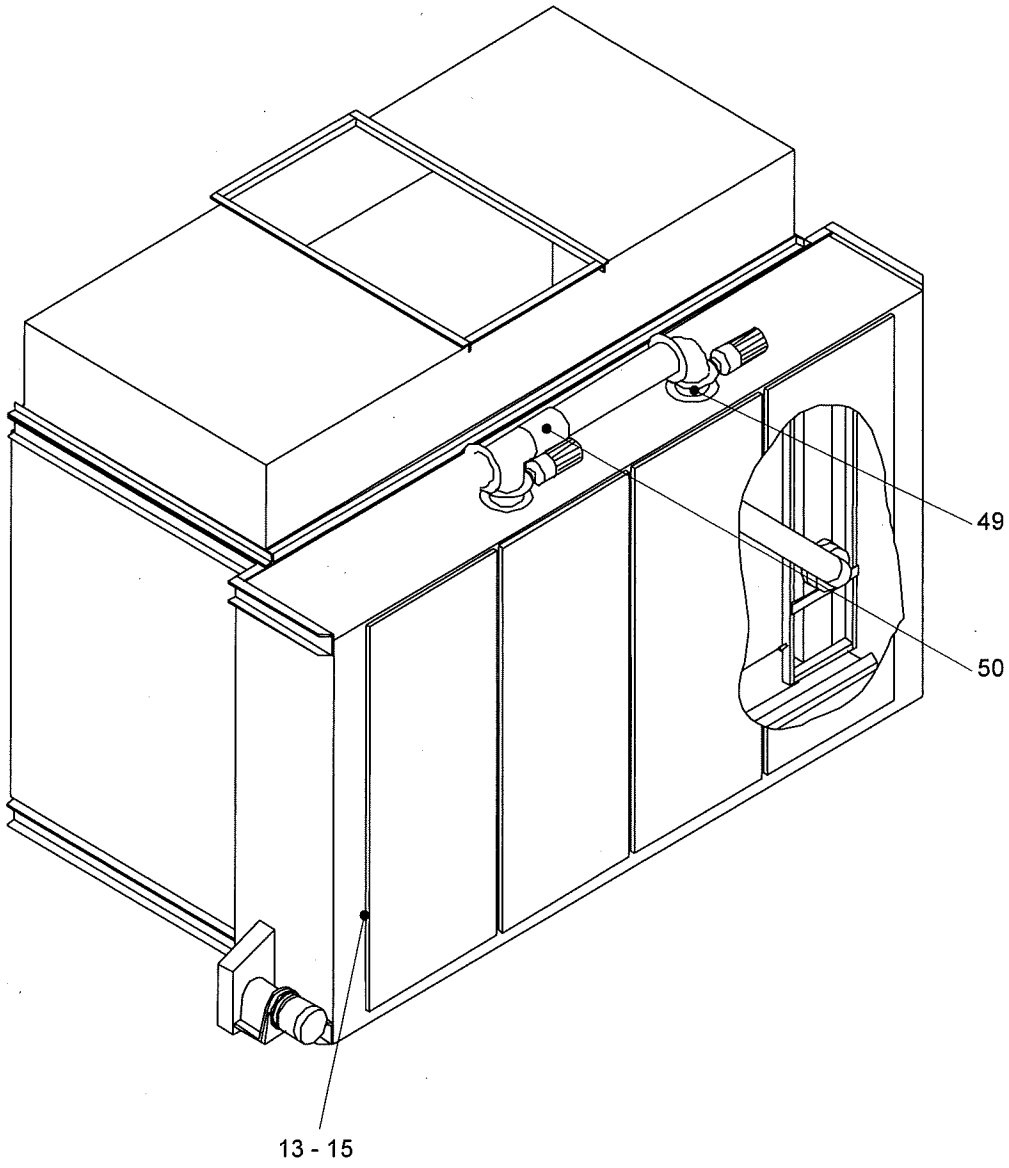

Designation			
Cassette-type filter FS			
Sketch no.: **D11 4100**	Revision no.: **00**	Page: 1 of: 1	Date: 18.09.2017

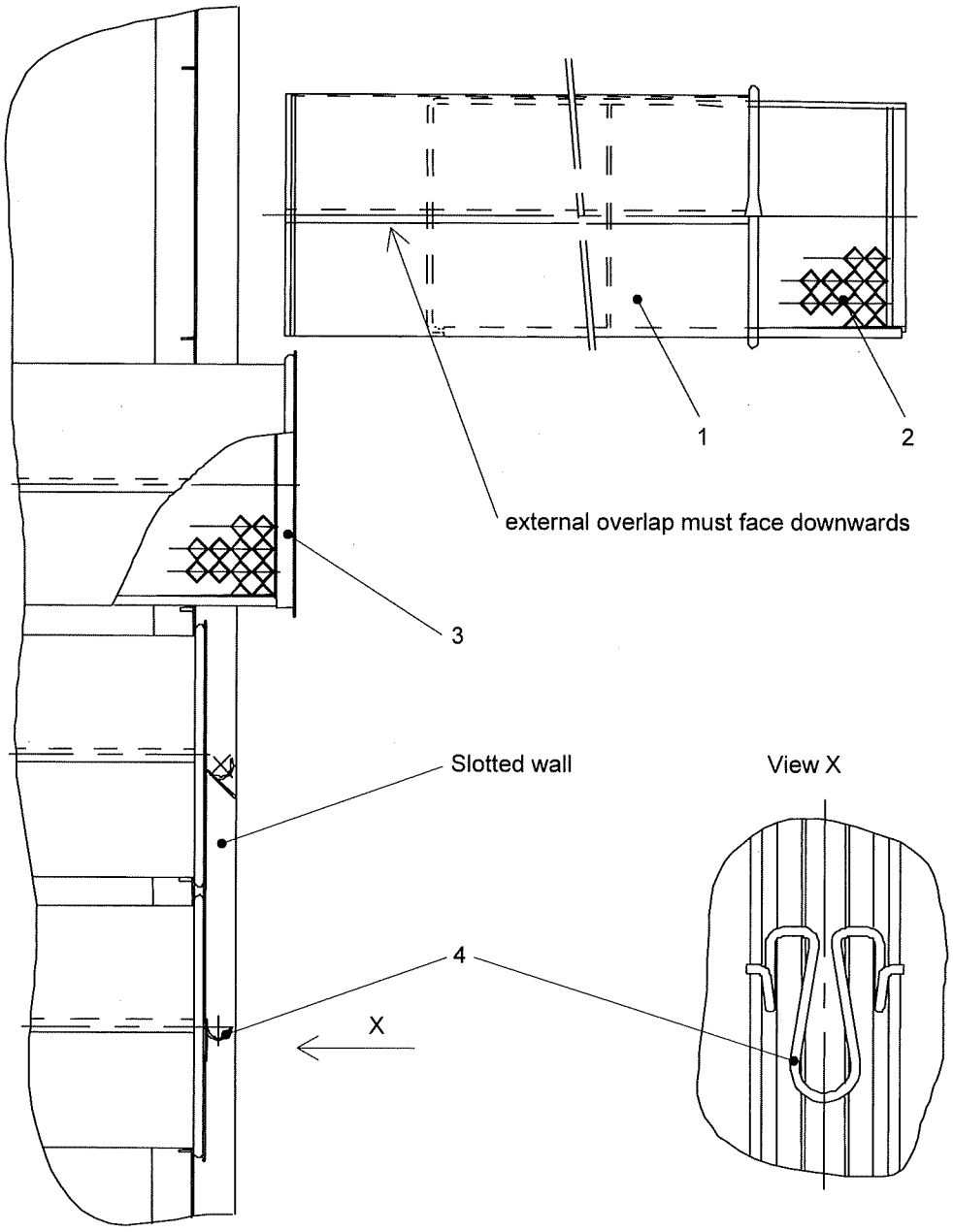

Designation			
Flat bag installation			
Sketch no.: **D11 4105**	Revision no.: **00**	Page: 1 of: 1	Date: 18.09.2017

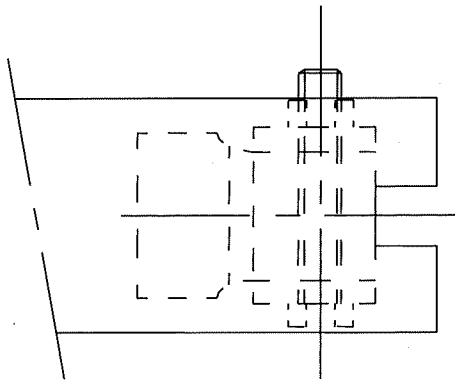

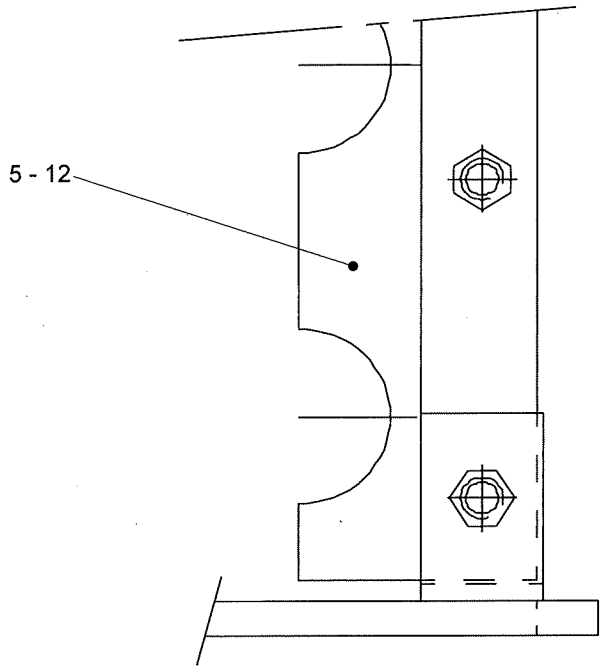

Designation			
Support for filter element			
Sketch no.: **D11 4106**	Revision no.: **00**	Page: 1 of: 1	Date: 18.09.2017

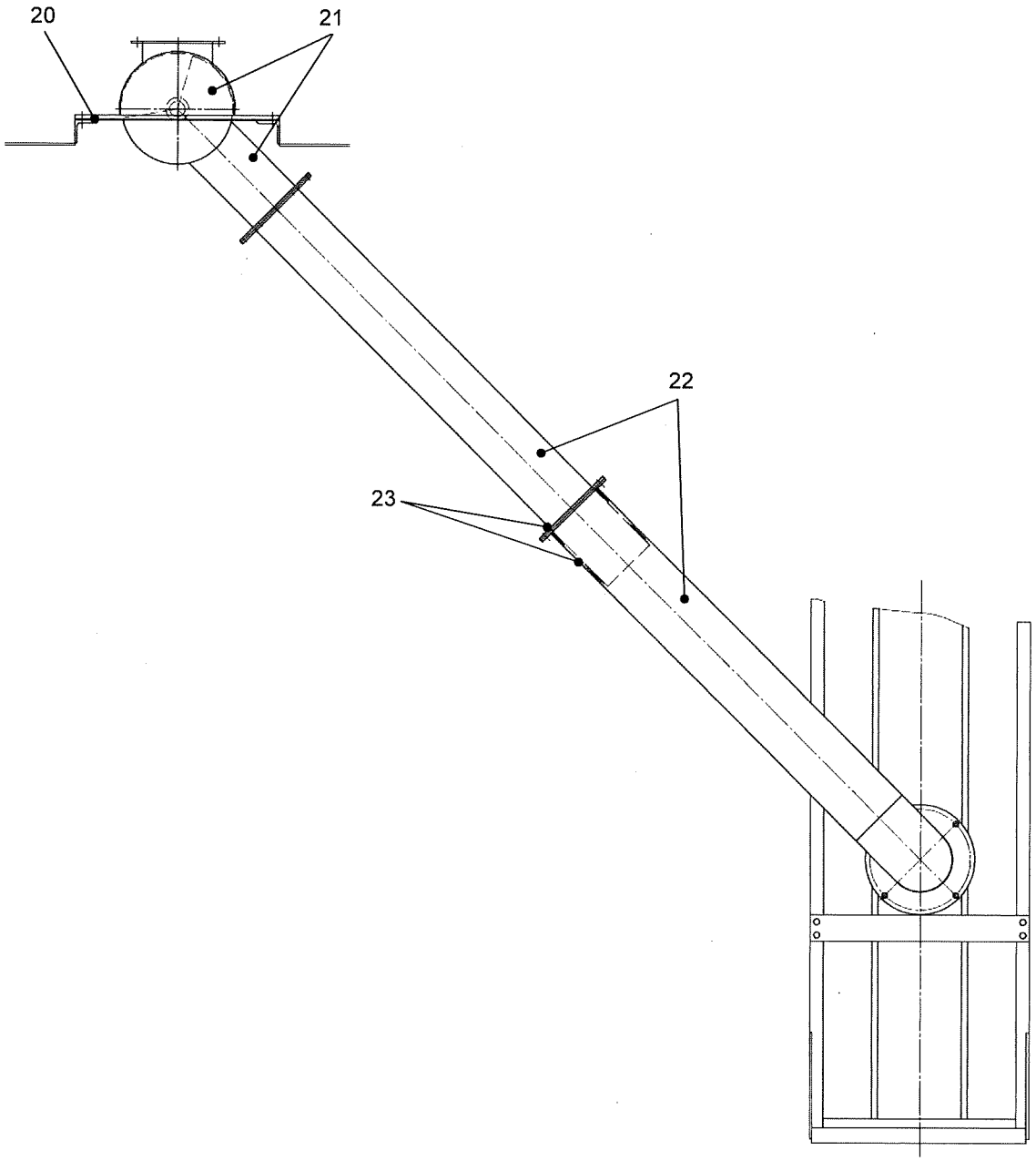

Designation			
Telescopic pipe – FS			
Sketch no.: **D11 4109**	Revision no.: **00**	Page: 1 of: 1	Date: 18.09.2017

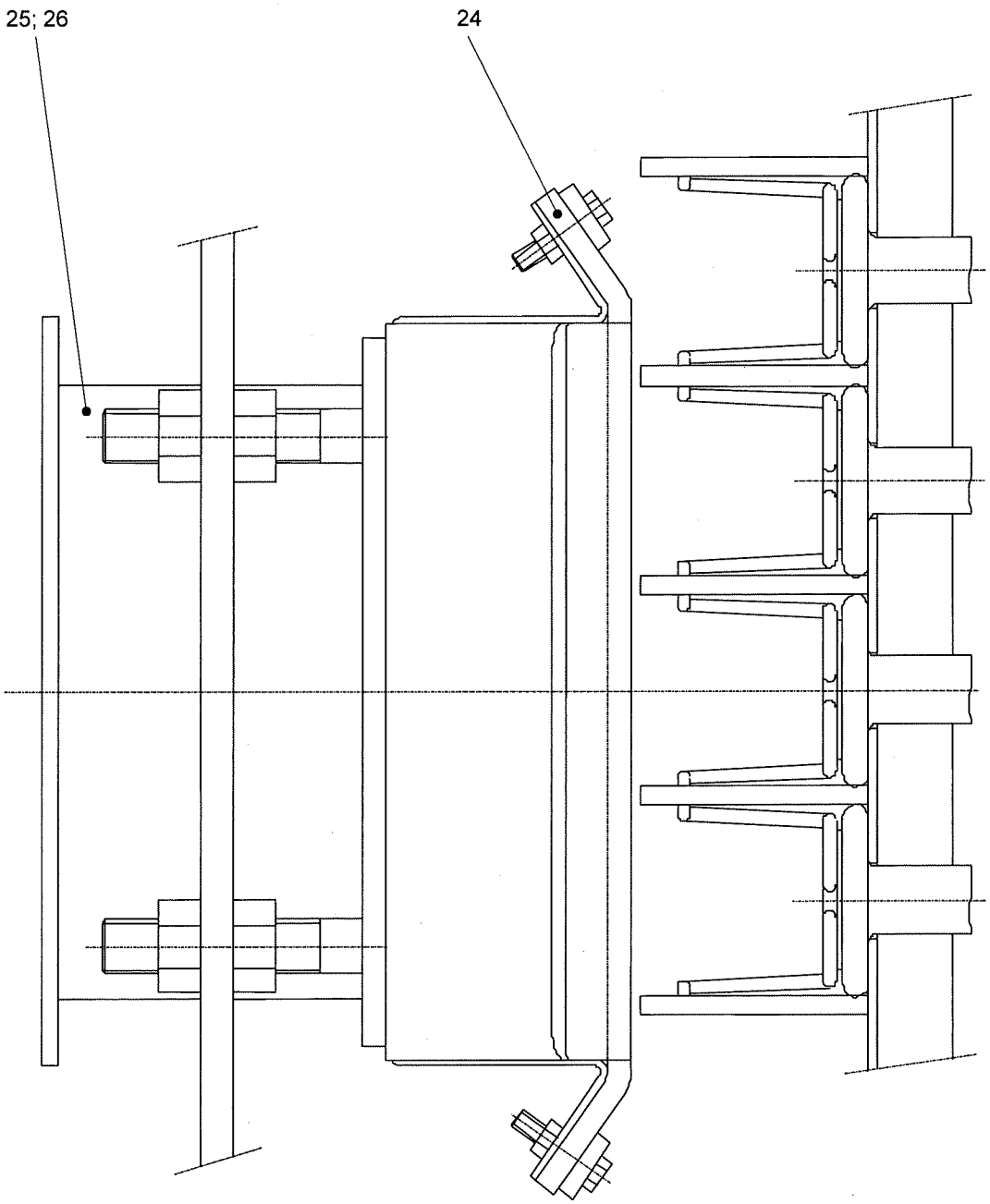

Designation			
Cleaning nozzle			
Sketch no.: **D11 4110**	Revision no.: **00**	Page: 1 of: 1	Date: 18.09.2017

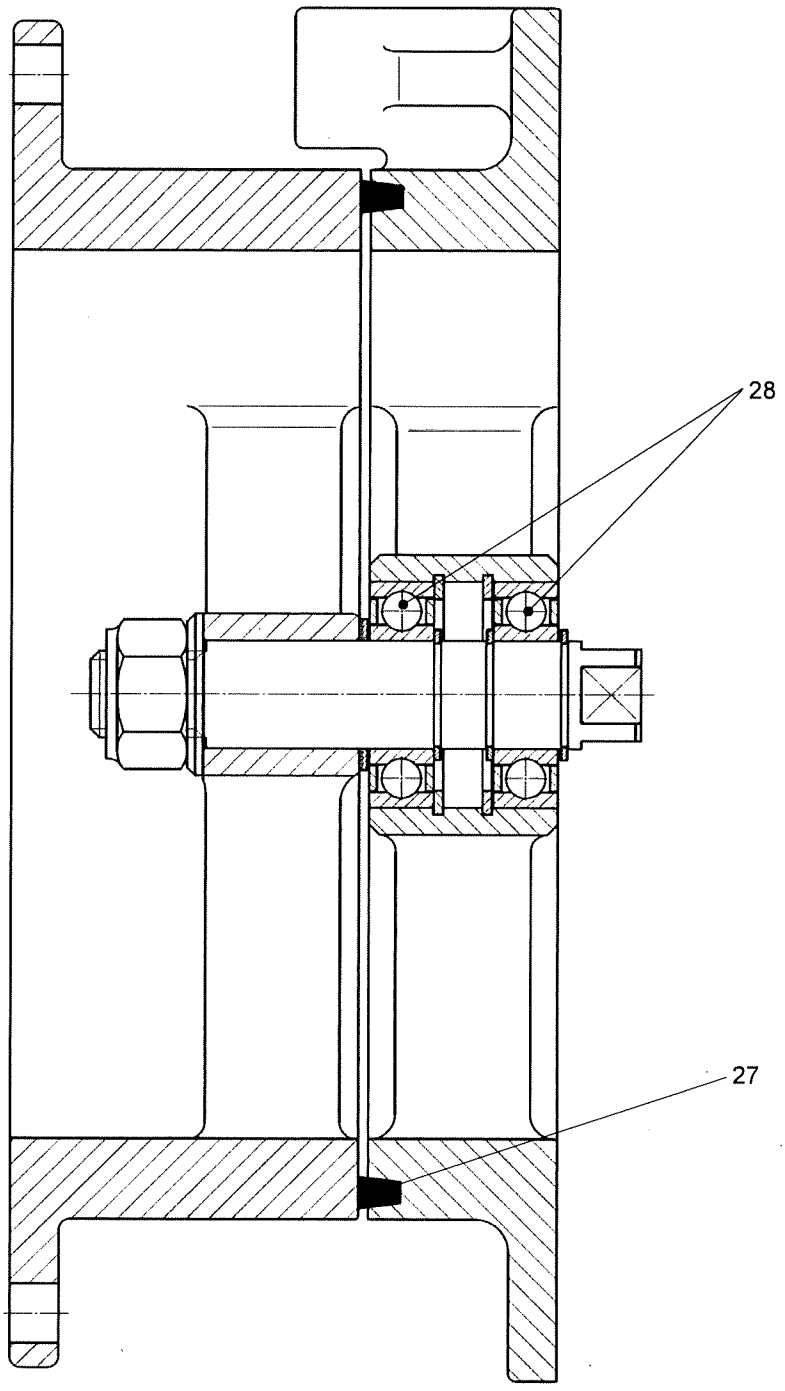

Designation			
Cleaning nozzle connection			
Sketch no.: **D11 4111**	Revision no.: **00**	Page: 1 of: 1	Date: 18.09.2017

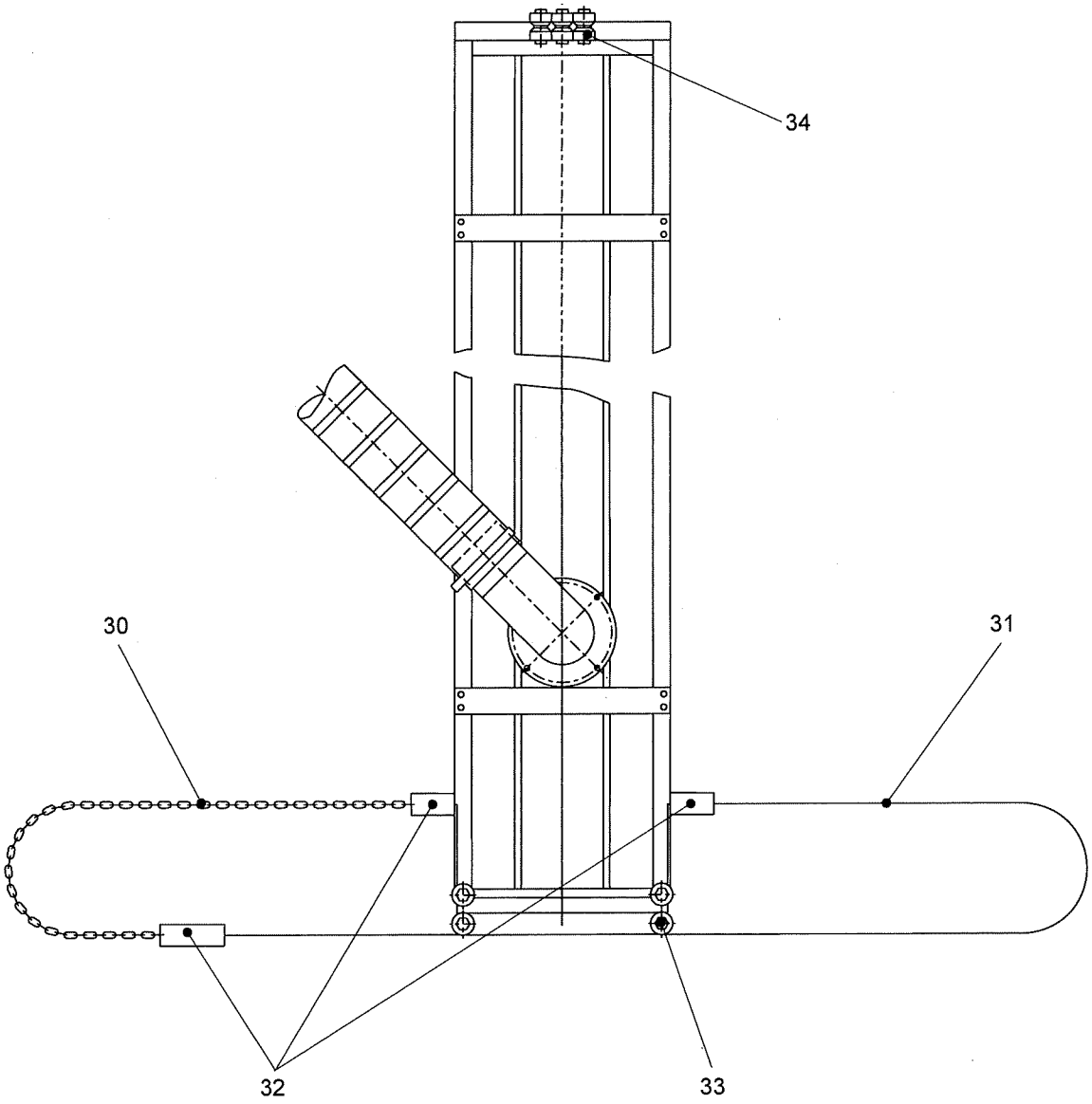

Designation			
Cleaning car complete with chain/rope drive FS			
Sketch no.: **D11 4112**	Revision no.: **00**	Page: 1 of: 1	Date: 18.09.2017

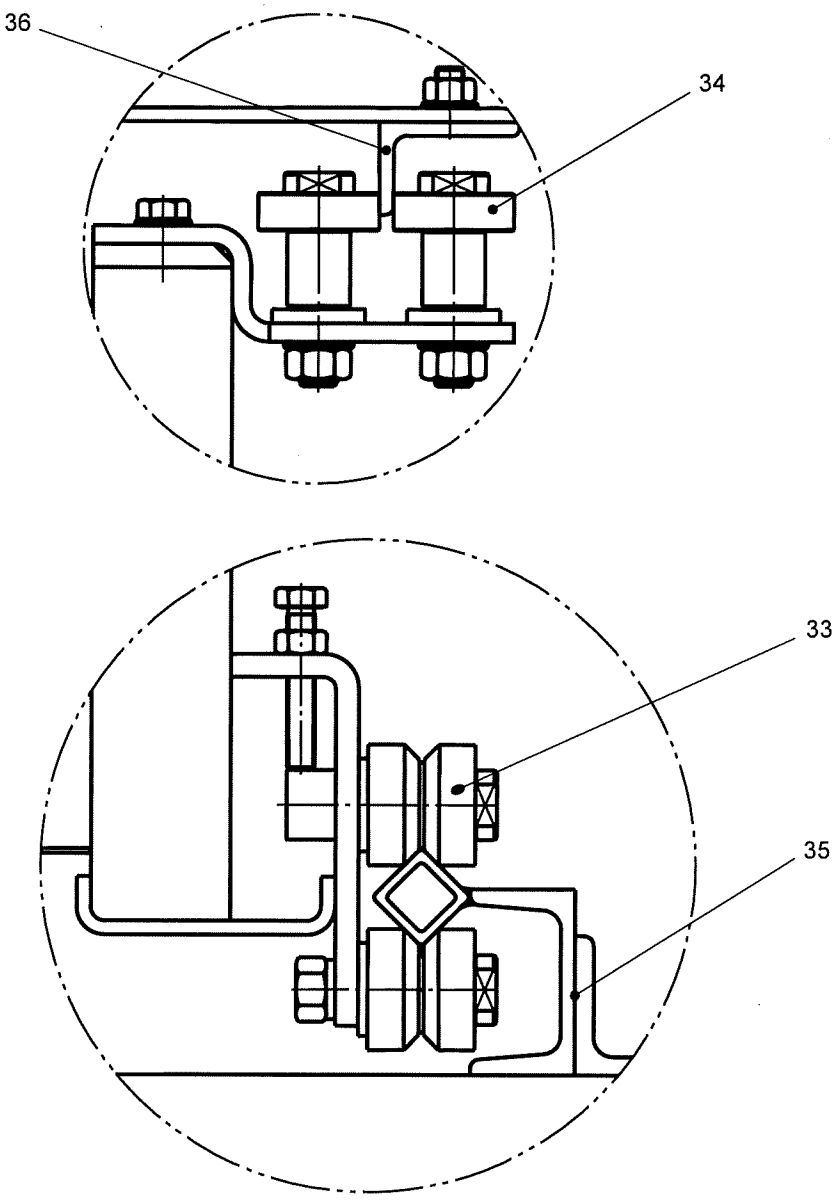

Designation			
Running rails and rollers FS			
Sketch no.: **D11 4114**	Revision no.: **00**	Page: 1 of: 1	Date: 18.09.2017

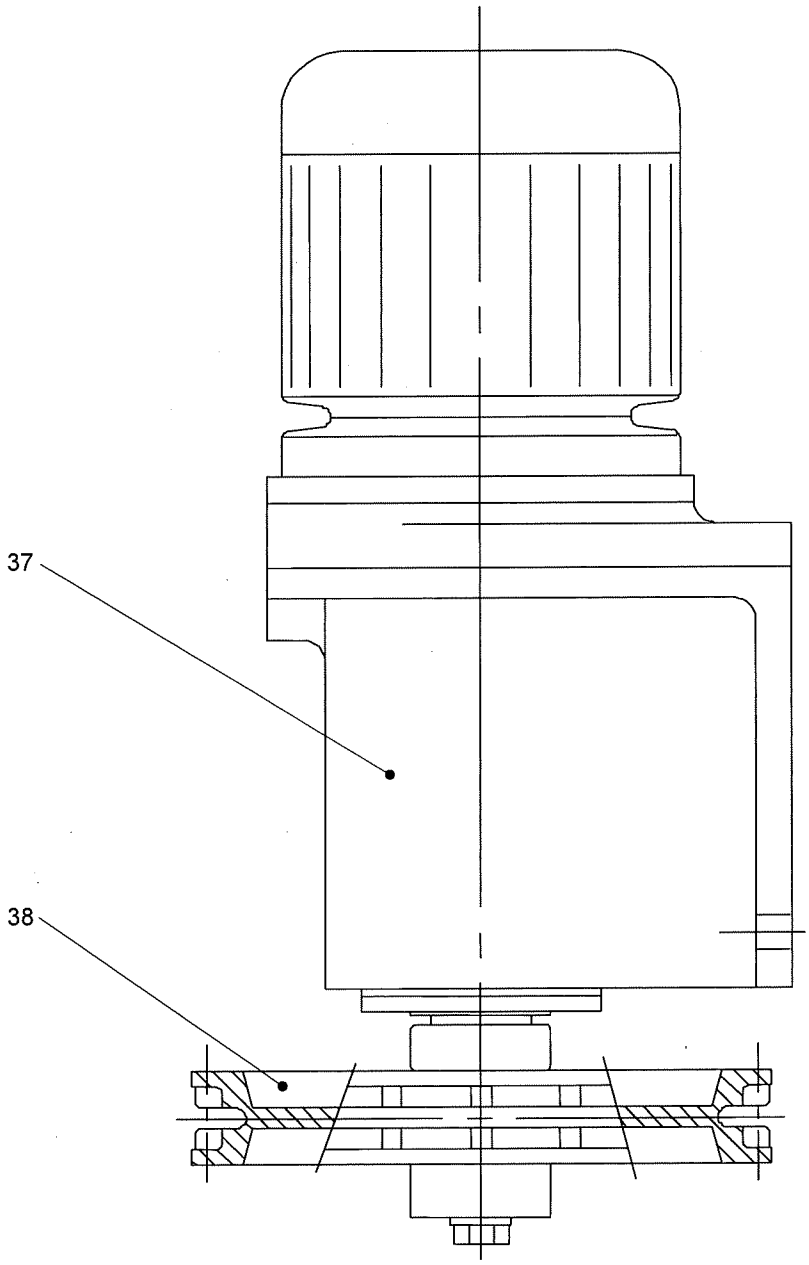

Designation			
Drive station FS			
Sketch no.: **D11 4116**	Revision no.: **00**	Page: 1 of: 1	Date: 18.09.2017

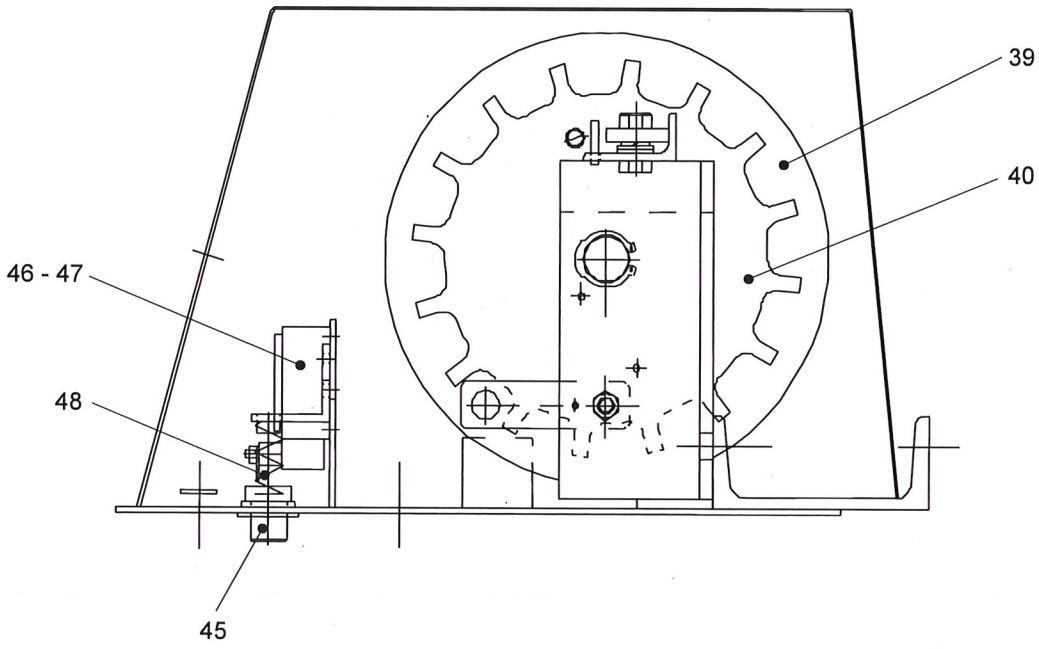

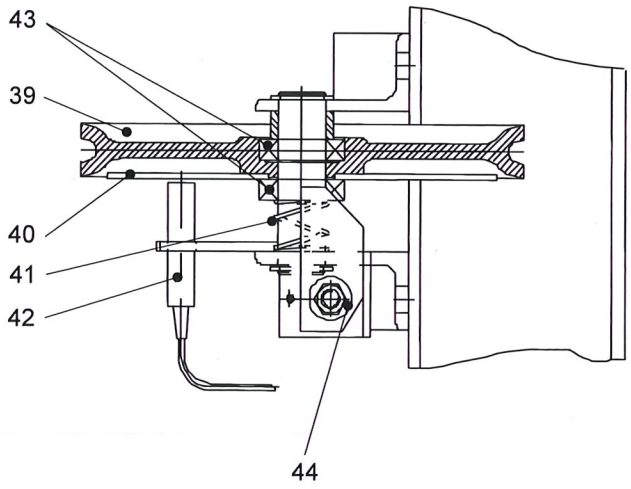

Designation			
Deflecting station FS			
Sketch no.: **D11 4118**	Revision no.: **00**	Page: 1 of: 1	Date: 18.09.2017

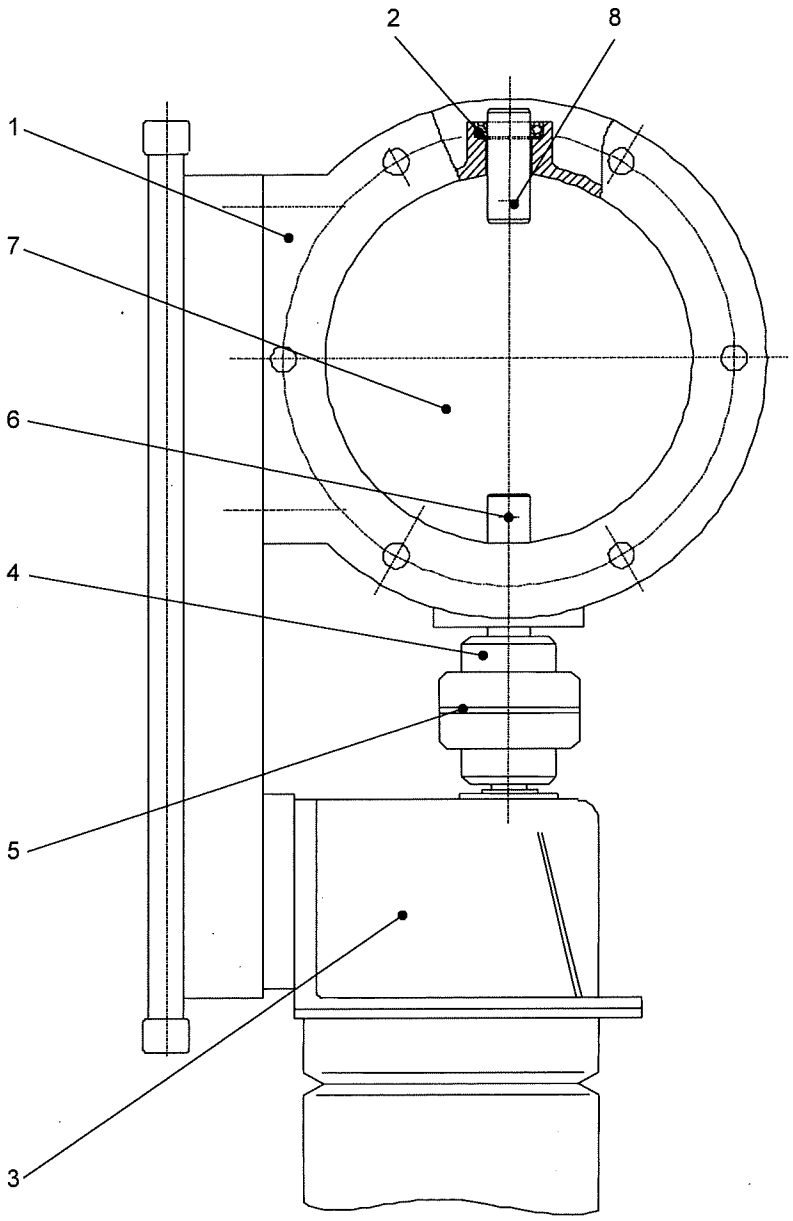

Designation			
Cleaning air damper – motor operated			
Sketch no.: **D11 4124**	Revision no.: **00**	Page: 1 of: 1	Date: 18.09.2017

12 Suppliers' documentation

Contents

12.1 Cleaning air radial fan (Nederman Manufacturing)

12.1.1 Operation manual **RFS**

12.2 Drives

12.2.1 Gear motors (Bauer Gear Motor
12.2.2 3-phase AC motors (Küenle)

CLICK BOOKMARKS FOR INDEX

CAT®

Electric Power

EAST JORDAN

KODIAK GROUP

(2) G300LG6 GENSET

SUBMITTAL DRAWINGS

Michigan CAT Project # TBD

Michigan CAT®

25000 Novi Road
Novi, MI 48375-1624
Main Office (248) 349-7050
FAX: (248) 349-7508

Where Michigan Turns for Power!

Power Systems Division
7700 Caterpillar Drive
Grand Rapids, Michigan 49548
Phone (616) 827-8000 Fax (855) 817-6551

PROJECT: KODIAK GROUP

Michigan CAT is pleased to quote the following generator set for your consideration. *Items not specifically mentioned in this proposal are the responsibility of others.*

300 KW Natural Gas Powered Generator System

Olympian model **G300LG6** skid mounted generator set **480V** with:

- Natural Gas fueled engine with:
  - Radiator cooling system with guards designed for 125°F ambient
  - Starting battery 24 VDC, battery rack and cables
  - H-100 Control Panel
  - Generator Running Relay
  - Vibration isolators between engine/alternator and base frame
  - Anti-Condensate Heater
  - Air cleaner, fuel filter, oil filter, oil and antifreeze
  - (1) 500 Amp UL listed circuit breaker
  - 35 amp charging alternator
  - 24 volt starting motor
  - Battery Heater
  - Jacket Water Heater
  - Sound Attenuated Enclosure

Warranty:

Two Year (24 Months) Standard Warranty for Standby Operation

Lead times:	Submittal Drawings:	As required, usually 1 to 2 weeks.
	Equipment Delivery:	Please contact for current lead times

OPTIONS: Please Indicate On Purchase Order
1.

Power Systems Division
25000 Novi Road
Novi, MI 48375
(248) 349-7050

Michigan CAT Power Systems Division Project Contact List

Project Manager:
Ryan Solomon
Project Manager

Michigan CAT
25000 Novi Rd
Novi, MI 48375

Office: (248) 349-7050 x1406
Fax: (248) 564-5498
Cellular: (248) 249-3849

E-mail: ryan.solomon@michigancat.com
Web page: http://www.michigancat.com

Sales Representative:
Mark Wild
Sales Engineer

Michigan CAT
7700 Caterpillar Drive
Grand Rapids, MI 49548

Office: (248) 349-7050 x2777
Fax: (866) 743-4197
Cellular: (616) 460-3979

E-mail: mark.wild@michigancat.com
Web page: http://www.michigancat.com

Sales Manager:
Kevin O'Connell
Commercial Engine Business Manager

Michigan CAT
25000 Novi Road
Novi, MI 48375-1624

Office: (248) 349-7050 x 1225
E-mail: Kevin.oconnell@michigancat.com
Web page: http://www.michigancat.com

Service Support:
John Buckner
Field Service Manager

Michigan CAT
25000 Novi Road
Novi, MI 48375-1624

Office: (800) 833-1789 x1485
E-mail: john.buckler@michigancat.com
Web page: http://www.michigancat.com

Parts Department:
Parts Counter

Michigan CAT
24800 Novi Road
Novi, MI 48375-1624

Office: (800) 833-1789

24 hour / 7 days a week
Emergency Service

1-888-MICHCAT

INSTALLATION REQUIREMENTS BY OTHERS

Gas Sets

Clarification of Installation Requirements. The installation of the above equipment to be supplied by Michigan CAT requires (but is not limited to) the following labor and/or Material to be provided by the installing contractor(s):

1) Off loading, rigging and installation of all the equipment sold by Michigan Cat.

2) Foundations, pads, supports, anchor bolts, hangers, brackets, etc., to install the above equipment.

3) Installation and proper sizing of fuel lines. **(Natural gas engines require 11" to 15" WC Pressure at the generator regulator).**

4) A/C power wiring, conduit, connectors, termination's, etc., to connect the generator.

5) A/C power circuits, wiring, conduit, etc. To provide power.

6) All control/interconnect wiring to the generator.

   - **NOTE: Do not run control interconnect wires in same conduit with AC wiring. All control interconnect wiring to be stranded wire.**

7) All exhaust piping, elbows, spool pieces, flanges, hangers, supports, isolators, wall thimbles/roof thimbles, insulation, screens, rain caps, expansion joints, nuts, bolts and gaskets, painting, etc.

8) Radiator ducts, flexible canvas connectors, louvers, screens, motorized dampers, ventilating fans, etc., to allow for proper ventilation and cooling air flow in and out of the room.

9) Installation location, orientation of equipment and clearances are the responsibility of the contractor an/or engineer. Common installation problems include, but are not limited to, the following:

   - Blocking the radiator discharge air flow
   - Not enough available "free air" intake for radiator cooling and ventilation
   - Under sizing exhaust piping size on long runs
   - Noting that the exhaust flow directed at an object or building will "blacken" that surface
   - Not providing enough clearance around equipment for service and/or maintenance
   - Running DC control interconnect wire in same conduit with AC wiring
   - Requiring excessive number and/or size of power cables to generator and/or ATS's that cannot be physically installed

10) Unless specifically stated above, all equipment supplied by Michigan CAT carries the manufacturer's standard warranty.

11) Mounting of ship loose battery chargers, wiring for battery charger (ac & dc) and jacket water heater.

12) We feel we have given the appropriate information required for the proper installation of the equipment to be provided by Michigan CAT. We will be happy to provide any additional information requested for this project.

Michigan CAT will not be responsible for any additional expense or project delays as a result of improper installation. Additional charges to the customer may be necessary if Michigan CAT is required to make any field modifications or additional startup and testing trips.

1. Installation Factors

Once the size of the generator set and the required associated control panel and switchgear have been established, plans for installation can be prepared. Proper attention to mechanical and electrical engineering details will assure a satisfactory power system installation.

Factors to be considered in the installation of a generator are:

Access and maintenance location
Floor loading
Vibration transmitted to building and equipment
Ventilation of room
Engine exhaust piping and insulation
Noise reduction
Method of engine cooling
Size and location of diesel fuel tank,
or gas supply system
Local, national or insurance regulations
Smoke and emissions requirements

2. Moving the Generator Set

The generator set baseframe is specifically designed for ease of moving the set. Improper handling can seriously damage the generator and components.

Using a forklift, the generator set can be lifted or for minor location adjustments pushed/pulled by the baseframe.

NOTE: Never lift the generator set by attaching to the engine or alternator lifting lugs!

For lifting the generator set, lift points are provided on the baseframe. Shackles and chains of suitable length and lifting capacity must be used and a spreader bar is required to prevent damaging the set. See Figure 2.1. An optional "single point lifting eye" is available on most diesel generator sets if the **generator** set will be regularly moved by lifting.

NOTE: The single point lifting eye should only be used to lift a generator set with an empty fuel tank. In all other situations, i.e. with the fuel tank containing fuel, the lifting of the generator set should only take place using the lifting eyes located on the side of the baseframe using the appropriate lifting equipment, including spreader bars, etc. to prevent damage to the generator set.

3. Generator Set Location

The set may be located in the basement or on another floor of the building, on a balcony, in a penthouse on the roof or even in a separate building. Usually it is located in the basement for economics and for convenience of operating personnel. The generator room should be large enough to provide adequate air circulation and plenty of working space around the engine and alternator.

If it is necessary to locate the generator set outside the building, it can be furnished enclosed in a housing and mounted on a skid or trailer (for diesel generator sets). This type of assembly is also useful, whether located inside or outside the building, if the installation is temporary. For outside installation the housing is normally "weatherproof". This is necessary to prevent water from entering the alternator compartment if the generator set is to be exposed to rain accompanied by high winds.

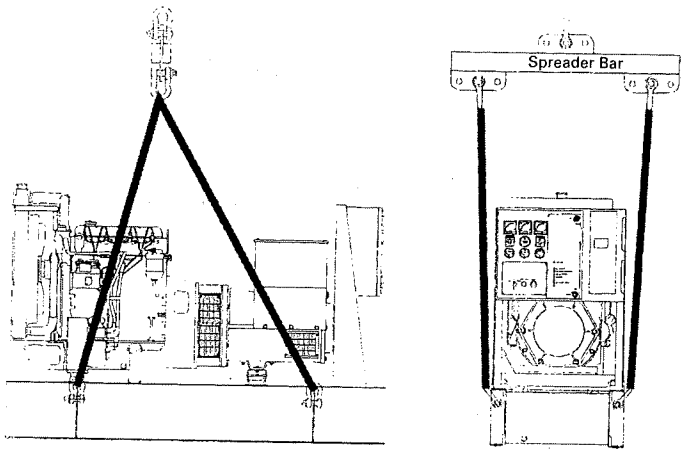

Figure 2.1: Proper Lifting Arrangement

Installation

Foundations

Major functions of a foundation are to:

- Support total weight of generator set.
- Maintain alignment between engine, generator, and accessory equipment.
- Isolate generator set vibration from surrounding structures.

Ground Loading

Initial considerations include generator set weight and material supporting this weight.

The wet weight of the total package must be calculated. This includes accessory equipment and weight of all liquids (coolant, oil, and fuel,) supported by the foundation.

Weights of Liquids		
Liquid	lb/U.S. gal	Specific Gravity
Water/Glycol	8.55	1.030
Water	8.30	1.000
Lube Oil	7.60	0.916
Diesel Fuel	7.10	0.855
Kerosene	6.70	0.800

Figure 2

Material supporting foundation must carry the total weight. Figure 3 shows bearing load capabilities of common materials.

Bearing Load Capability		
	Safe Bearing Load	
Material	psi	kPa
Rock, Hardpan	70	482
Hard Clay, Gravel Coarse Sand	56	386
Loose Medium Sand and Medium Clay	28	193
Loose Fine Sand	14	96.4
Soft Clay	0-14	0-96.4

Figure 3

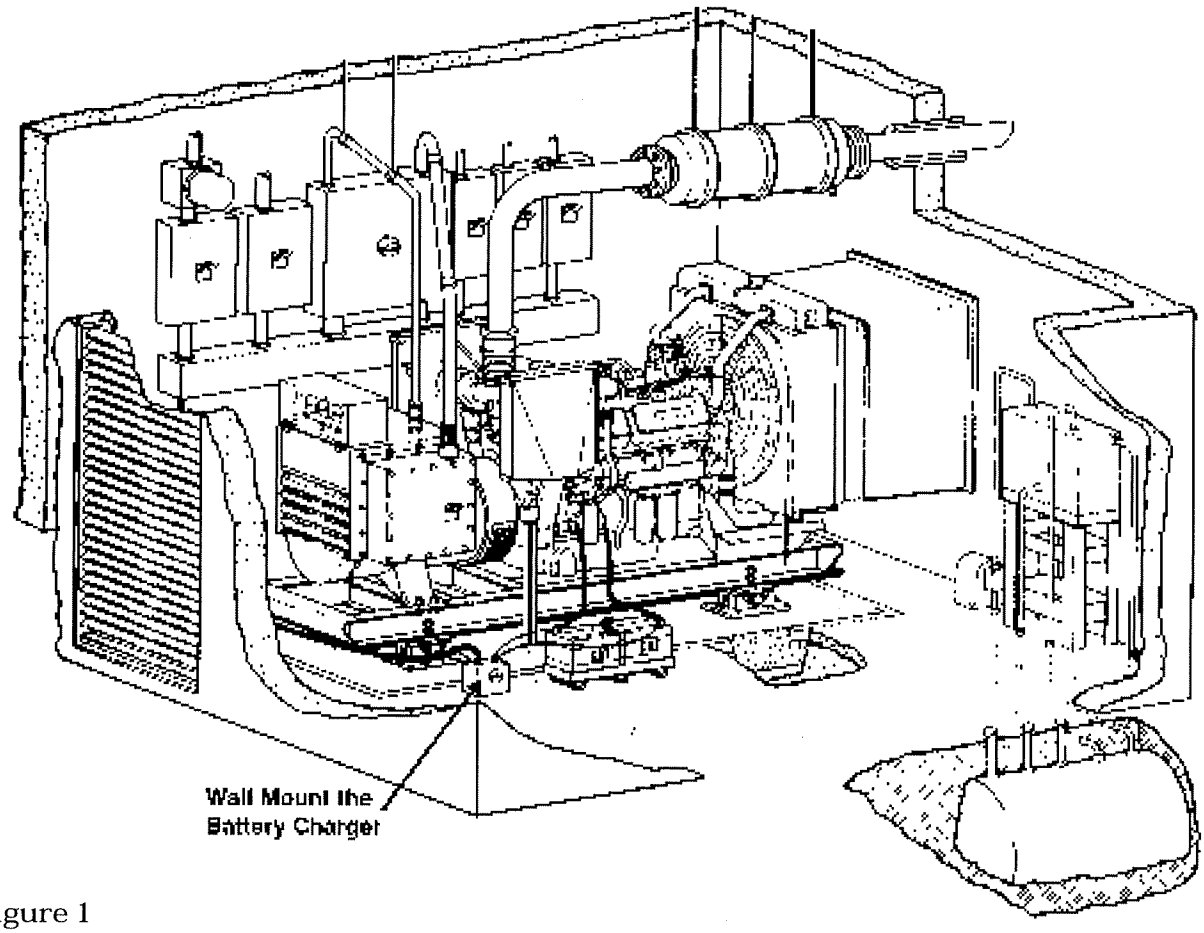

Figure 1

Firm, level soil, gravel, or rock provides satisfactory support for single-bearing generator sets used in stationary or portable service. Use this support where the weight-bearing capacity of the supporting material exceeds pressure exerted by the equipment package, and where alignment with external machinery is unimportant.

Soil, such as fine clay, loose sand, or sand near the ground water level, is particularly unstable under dynamic loads and require substantially larger foundations. Information concerning bearing capacity of soils at the site may be available from local sources and must comply with local building codes.

Area of load-bearing support is adjusted to accommodate surface material. To determine pressure (P) exerted by the generator set, divide total weight (W) by total surface area (A) of the rails, pads, or vibration mounts.

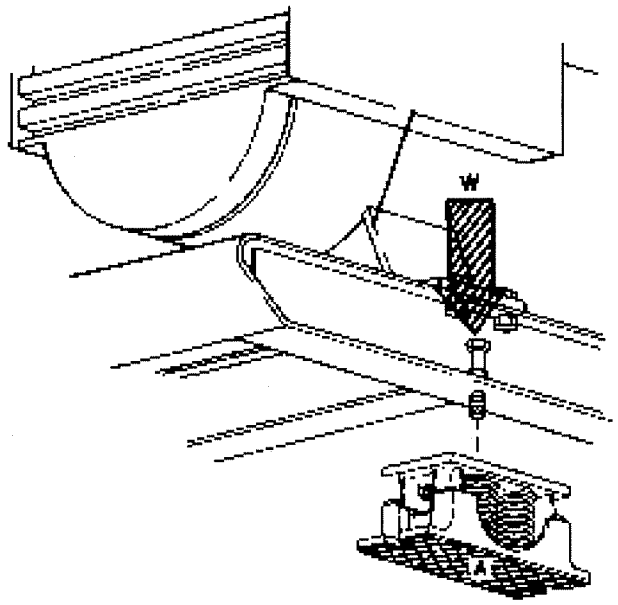

Figure 4

$$P = \frac{W}{A}$$

Where: P = Pressure in kg/m² (psi)
W = Weight in kg (lb)
A = Area in m² (in²)

Pressure imposed by the generator set weight must be less than the load-carrying capacity of supporting material.

Where support rails or mounting feet have insufficient bearing area, flotation pads can distribute the weight. The underside area and stiffness of the pad must be sufficient to support the equipment.

Seasonal and weather changes adversely affect mounting surfaces. Soil changes considerably while freezing and thawing. To avoid movement from seasonal changes, extend foundations below the frost line.

Concrete Base

Several basic foundations are applicable for generator sets. The foundation chosen will depend on factors previously outlined as well as limitations imposed by the specific location and application.

Massive concrete foundations are unnecessary for modern multicylinder medium speed generator sets. Avoid excessively thick, heavy bases to minimize subfloor or soil loading. Bases need be only thick enough to prevent deflection and torque reaction, while retaining sufficient surface area for support. (Non-parallel units require no foundation anchoring.)

If a concrete foundation is required, *minimum* design guidelines include:

- Strength must support wet weight of units plus dynamic loads.
- Outside dimensions exceed that of the generator set a minimum of 300 mm (1 ft) on all sides.
- Depth sufficient to attain a minimum weight equal to generator set wet weight (only if large mass, i.e., inertia block, is specified for vibration control).

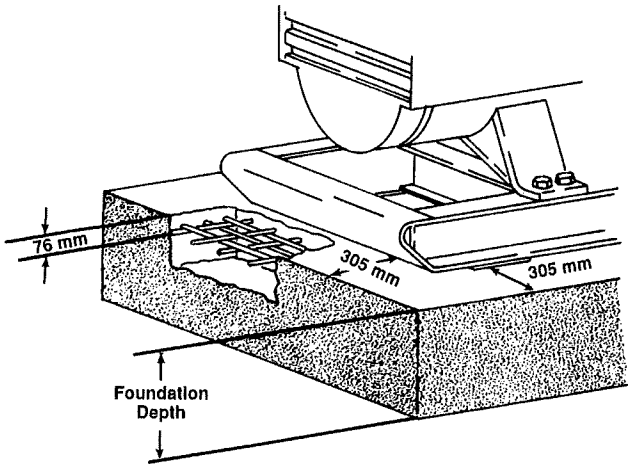

Figure 5

Calculate foundation depth to equal generator set weight by:

$$FD = \frac{W}{D \times B \times L}$$

FD = foundation depth, m (ft)
W = total wet weight of generator set, kg (lb)
D = density of concrete, kg/m^3 (lb/ft^3)
Note: use 2403 for metric units and 150 for English units.
B = foundation width, m (ft)
L = foundation length, m (ft)

Suggested concrete mixture by volume is 1:2:3 of cement, sand, aggregate, with maximum 100 mm (4 in.) slump and 28-day compressive strength of 20 MPa (3000 psi).

Reinforce with No. 8 gauge steel wire mesh or equivalent, horizontally placed on 150 mm (6 in.) centers. An alternative method places No. 6 reinforcing bars on 300 mm (12 in.) centers horizontally. Bars should clear foundation surfaces 75 mm (3 in.) minimum.

When effective vibration isolation equipment is used, depth of floor concrete is that needed for structural support of the static load. Major rotating and reciprocating components of Caterpillar generator sets are individually balanced and, theoretically, have no unbalance. Practically, manufacturing tolerances and combustion forces impose some dynamic loading on the foundation. If isolators are not used, dynamic loads transmit to the facility floor and requires the floor to support 125% of the generator set weight.

If generator sets are paralleled, possible out-of-phase paralleling and resulting torque reactions demand stronger foundations. The foundation must withstand twice the wet weight of the generator set.

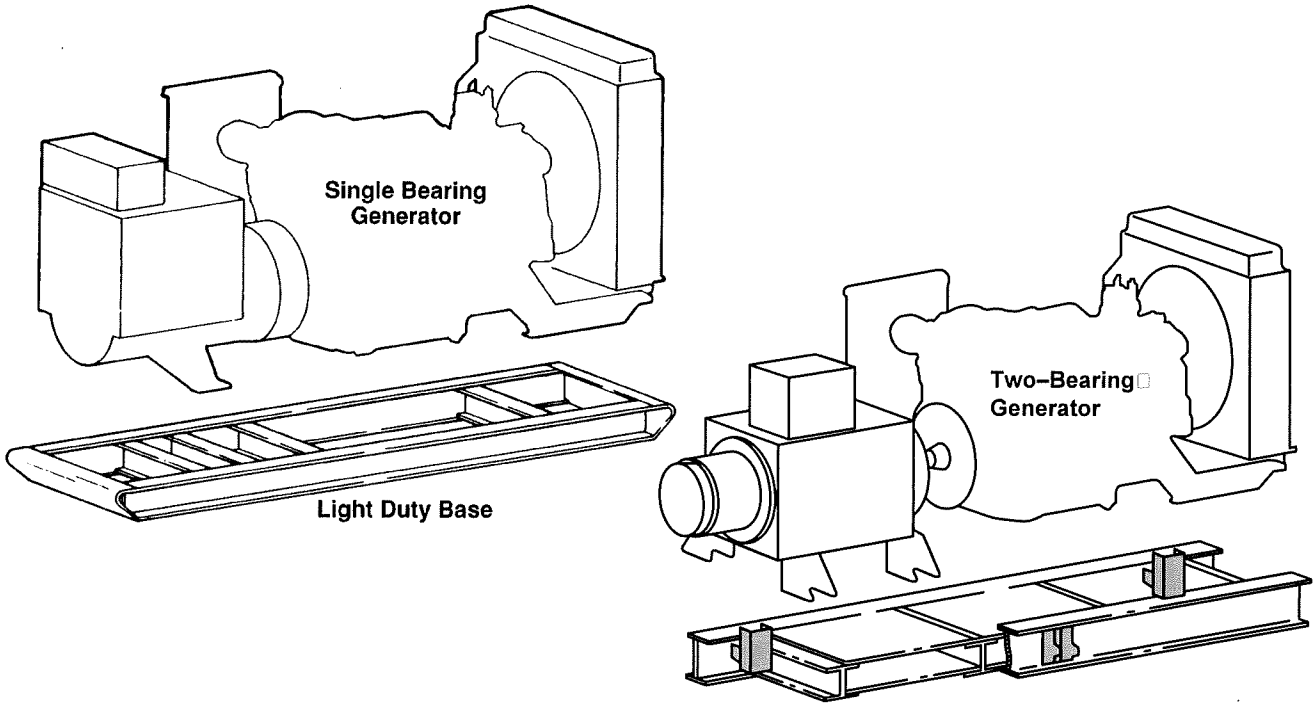

Figure 6

4. Generator Set Mounting

The generator set will be shipped assembled on a rigid base that precisely aligns the alternator and engine and needs merely to be set in place (on vibration isolation pads for larger sets) and levelled. See Figure 4.1.

4.1 Vibration Isolation

It is recommended that the generator set be mounted on vibration isolation pads to prevent the set from receiving or transmitting injurious or objectionable vibrations. Rubber isolation pads are used when small amounts of vibration transmission is acceptable. Steel springs in combination with rubber pads are used to combat both light and heavy vibrations. On smaller generator sets, these isolation pads should be located between the coupled engine/alternator feet and the baseframe. The baseframe is then securely attached to the floor. On larger sets the coupled engine/alternator may be rigidly connected to the baseframe with vibration isolation between the baseframe and floor. Other effects of engine vibration can be minimized by providing flexible connections between the engine and fuel lines, exhaust system, radiator air discharge duct, conduit for control and power cables and other externally connected support systems.

4.2 Floor Loading

Floor loading depends on the total generator set weight (including fuel and water) and the number and size of isolator pads. With the baseframe mounted directly on the floor, the floor loading is:

$$\text{Floor Loading} = \frac{\text{Total Generating Set Weight}}{\text{Area of Skids}}$$

With vibration isolation between the baseframe and the floor, if the load is equally distributed over all isolators, the floor loading is:

$$\text{Floor Loading} = \frac{\text{Total Generating Set Weight}}{\text{Pad Area x Number of Pads}}$$

Thus, floor loading can be reduced by increasing the number of isolation pads.

If load is not equally distributed, the maximum floor pressure occurs under the pad supporting the greatest proportion of load (assuming all pads are the same size):

$$\text{Max Floor Pressure} = \frac{\text{Load on Heaviest Loaded Pad}}{\text{Pad Area}}$$

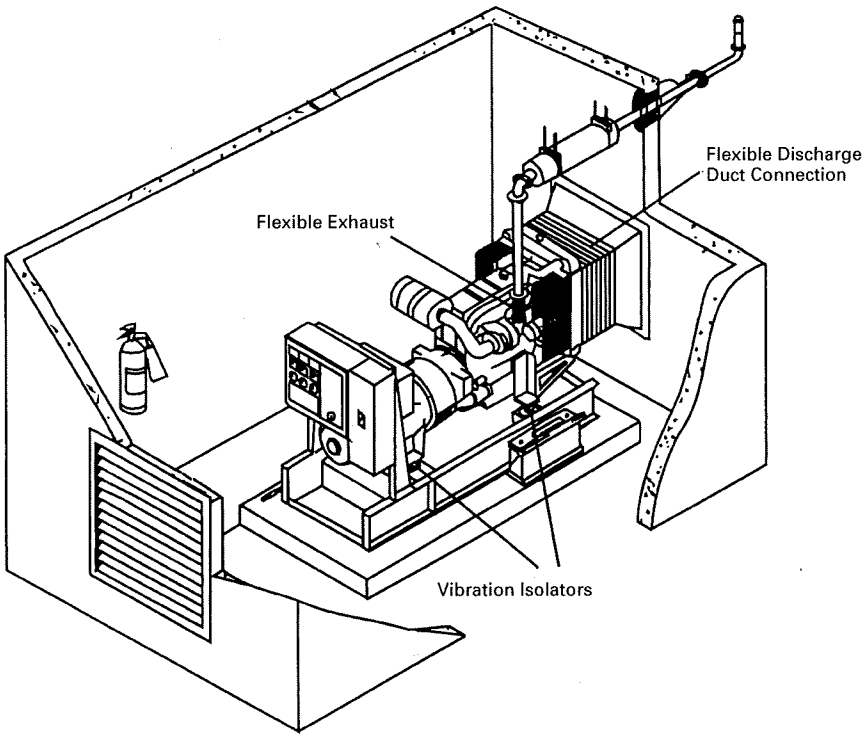

Figure 4.1: Reducing Vibration Transmission

5.3 Inlet Ventilator Size

Before calculating the inlet ventilator size, it is necessary to take into account the radiator cooling air flow requirements and the fan static pressure available when the generator set is operating at its rated load. In standard room installations, the radiated heat is already taken into account in the radiator air flow.

For generator room installation with remote radiators, the room cooling air flow is calculated using the total heat radiation to the ambient air of the engine and alternator and any part of the exhaust system.

Engine and alternator cooling air requirements for generator sets when operating at rated power are shown on specification sheets. Exhaust system radiation depends on the length of pipe within the room, the type of insulation used and whether the silencer is located within the room or outside. It is usual to insulate the exhaust piping and silencer so that heat radiation from this source may be neglected in calculating air flow required for room cooling.

After determining the required air flow into the room, calculate the size of inlet ventilator opening to be installed in the outside wall. The inlet ventilator must be large enough so that the negative flow restriction will not exceed a maximum of 10 mm (0.4 in) H_2O. Restriction values of air filters, screens and louvers should be obtained from manufacturers of these items.

5.4 Exit Ventilator Size

Where the engine and room are cooled by a set mounted radiator, the exit ventilator must be large enough to exhaust all of the air flowing through the room, except the relatively small amount that enters the engine intake.

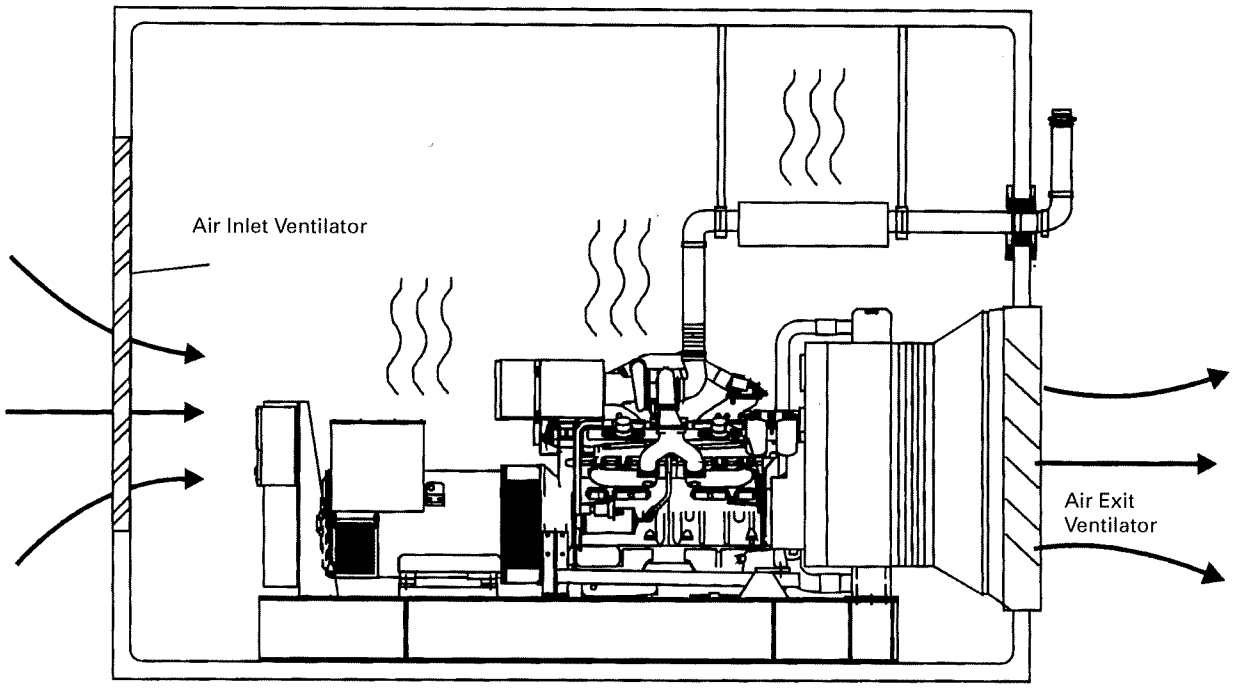

Figure 5.3: Inlet and Exit Ventilators

6. Engine Exhaust

Engine exhaust must be directed to the outside through a properly designed exhaust system that does not create excessive back pressure on the engine. A suitable exhaust silencer should be connected into the exhaust piping. Exhaust system components located within the engine room should be insulated to reduce heat radiation. The outer end of the pipe should be equipped with a rain cap or cut at 60° to the horizontal to prevent rain or snow from entering the exhaust system. If the building is equipped with a smoke detection system, the exhaust outlet should be positioned so it cannot set off the smoke detection alarm.

6.1 Exhaust Piping

For both installation economy and operating efficiency, engine location should make the exhaust piping as short as possible with minimum bends and restrictions. Usually the exhaust pipe extends through an outside wall of the building and continues up the outside of the wall to the roof. There should be a sleeve in the wall opening to absorb vibration and an expansion joint in the pipe to compensate for lengthways thermal expansion or contraction. See Figure 6.1.

It is not normally recommended that the engine exhaust share a flue with a furnace or other equipment since there is danger that back pressure caused by one will adversely affect operation of the others. Such multiple use of a flue should be attempted only if it is not detrimental to performance of the engine or any other equipment sharing the common flue.

The exhaust can be directed into a special stack that also serves as the outlet for radiator discharge air and may be sound-insulated. The radiator discharge air enters below the exhaust gas inlet so that the rising radiator air mixes with the exhaust gas. See Figures 6.2 and 6.3. The silencer may be located within the stack or in the room with its tail pipe extending through the stack and then outward. Air guide vanes should be installed in the stack to turn radiator discharge air flow upward and to reduce radiator fan air flow restriction, or the sound insulation lining may have a curved contour to direct air flow upward. For a generator set enclosed in a penthouse on the roof or in a separate outdoor enclosure or trailer, the exhaust and radiator discharges can flow together above the enclosure without a stack. Sometimes for this purpose the radiator is mounted horizontally and the fan is driven by an electric motor to discharge air vertically.

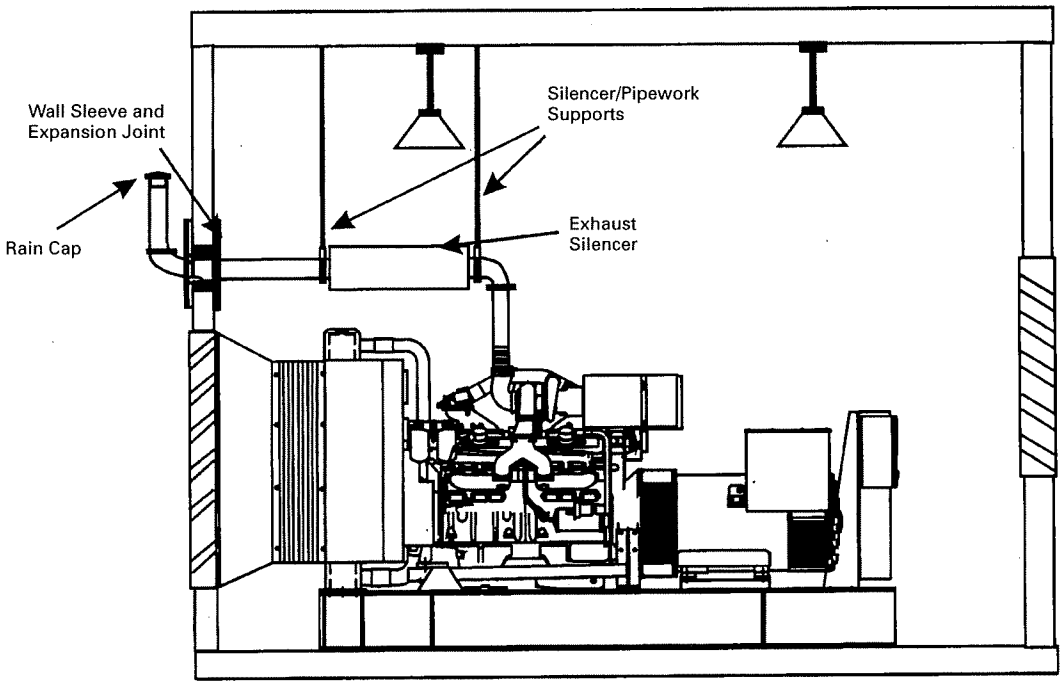

Figure 6.1: Typical Exhaust System Installation

6.2 Exhaust Pipe Flexible Section

A flexible connection between the manifold and the exhaust piping system should be used to prevent transmitting engine vibration to the piping and the building, and to isolate the engine and piping from forces due to thermal expansion, motion or weight of piping. A well designed flex section will permit operation with ±13 mm (0.5 in) permanent displacement in any direction of either end of the section without damage. Not only must the section have the flexibility to compensate for a nominal amount of permanent mismatch between piping and manifold, but it must also yield readily to intermittent motion of the Generator Set on its vibration isolators in response to load changes. The flexible connector should be specified with the Generator Set.

6.3 Exhaust Pipe Insulation

No exposed parts of the exhaust system should be near wood or other inflammable material. Exhaust piping inside the building (and the silencer if mounted inside) should be covered with suitable insulation materials to protect personnel and to reduce room temperature. A sufficient layer of suitable insulating material surrounding the piping and silencer and retained by a stainless steel or aluminum sheath may substantially reduce heat radiation to the room from the exhaust system.

An additional benefit of the insulation is that it provides sound attenuation to reduce noise in the room.

6.4 Minimizing Exhaust Flow Restriction

Free flow of exhaust gases through the pipe is essential to minimize exhaust back pressure. Excessive exhaust back pressure seriously affects engine horsepower output, durability and fuel consumption. Restricting the discharge of gases from the cylinder causes poor combustion and higher operating temperatures. The major design factors that may cause high back pressure are:

- Exhaust pipe diameter too small
- Exhaust pipe too long
- Too many sharp bends in exhaust system
- Exhaust silencer restriction too high
- At certain critical lengths, standing pressure waves may cause high back pressure

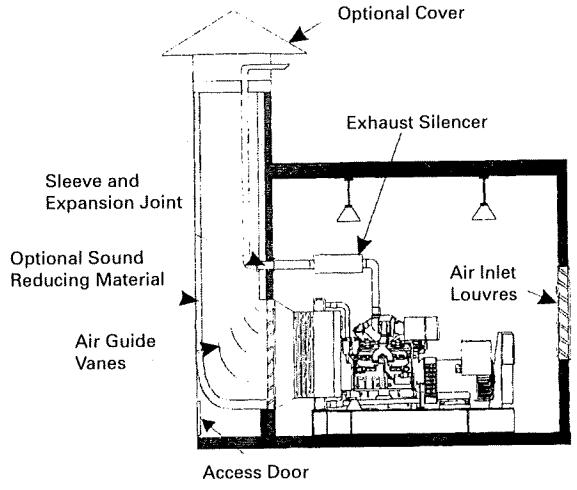

Figure 6.2: Horizontally Mounted Exhaust Silencer with Exhaust Pipe and Radiator Air Utilizing Common Stack

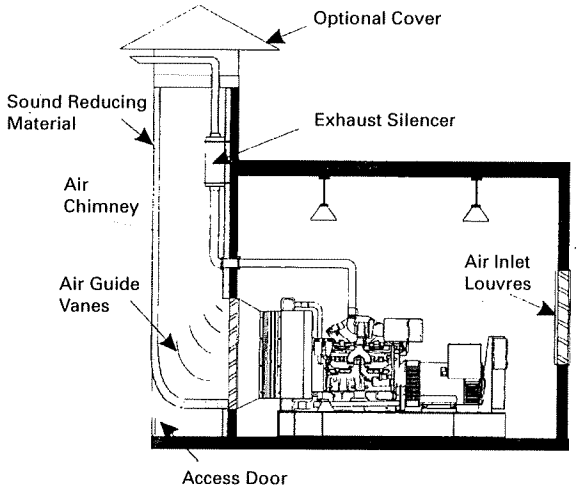

Figure 6.3: Radiator Air Discharging into Sound-Insulated Stack Containing Exhaust Silencer

Excessive restriction in the exhaust system can be avoided by proper design and construction. To make sure you will avoid problems related to excessive restriction, ask the dealer to review your design.

The effect of pipe diameter, length and the restriction of any bends in the system can be calculated to make sure your exhaust system is adequate without excessive back pressure. The longer the pipe, and the more bends it contains, the larger the diameter required to avoid excessive flow restriction and back pressure. The back pressure should be calculated during the installation stage to make certain it will be within the recommended limits for the engine.

Measure the exhaust pipe length from your installation layout. See Figure 6.4. Take exhaust flow data and back pressure limits from the generator set engine specification sheet. Allowing for restrictions of the exhaust silencer and any elbows in the pipe, calculate the minimum pipe diameter so that the total system restriction will not exceed the recommended exhaust back pressure limit. Allowance should be made for deterioration and scale accumulation that may increase restriction over a period of time.

Elbow restriction is most conveniently handled by calculating an equivalent length of straight pipe for each elbow and adding it to the total length of pipe. For elbows and flexible sections, the equivalent length of straight pipe is calculated as follows:

45° Elbow:
Length (ft) = 0.75 x Diameter (inches)

90° Elbow:
Length (ft) = 1.33 x Diameter (inches)

Flexible Sections:
Length (ft): 0.167 x Diameter (inches)

The following formula is used to calculate the back pressure of an exhaust system:

$$P = \frac{CLRQ^2}{D^5}$$

where:

P = back pressure in inches of mercury
C = .00059 for engine combustion air flow of 100 to 400 cfm
= .00056 for engine combustion air flow of 400 to 700 cfm
= .00049 for engine combustion air flow of 700 to 2000 cfm
= .00044 for engine combustion air flow of 2000 to 5400 cfm
L = length of exhaust pipe in feet
R = exhaust density in pounds per cubic foot

$$R = \frac{41.1}{\text{Exhaust Temperature °F* + 460° F}}$$

Q = exhaust gas flow in cubic feet per minute*
D = inside diameter of exhaust pipe in inches

* Available from engine specification sheet

These formulas assume that the exhaust pipe is clean commercial steel or wrought iron. The back pressure is dependent on the surface finish of the piping and an increase in the pipe roughness will increase the back pressure. The constant 41.1 is based on the weight of combustion air and fuel burned at rated load and SAE conditions. See engine specification sheet for exhaust gas temperature and air flow. Conversion tables to other units are provided in Section 13.

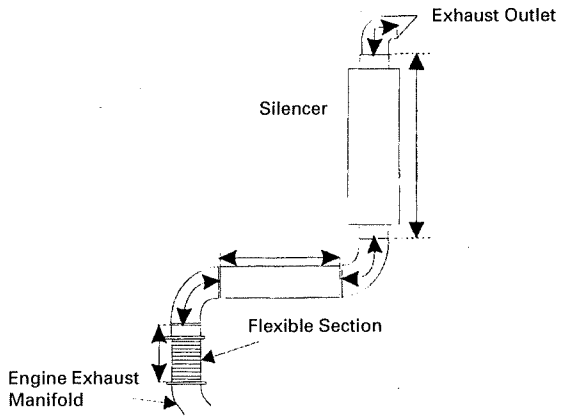

Figure 6.4: Measuring Exhaust Pipe Length to Determine Exhaust Back Pressure

12. Fuel Supply (Gaseous)

As with diesel generators, gaseous fueled generators also require a dependable fuel supply system that will ensure instant availability of fuel to facilitate starting and keep the engine operating. In some cases gaseous fueled generators can be fueled either with natural gas or liquefied propane gas (LP). Local gas codes regulating the installation of such gas supply systems vary widely, and therefore, local gas distributors or installers must be consulted when installing such systems. It is the responsibility of the installer to ensure that all applicable regulations and codes are complied with when installing a gas supply system for use by a generator.

Gaseous fuel systems must be in compliance with all relevant codes, standards and other requirements concerned with the storage, piping, handling, installation and use of these hazardous fuels. It is also important that the generator set room is properly ventilated according to gas regulations. Use of a suitable leak detection system is also recommended.

In most cases gas generators will be supplied with a factory fitted fuel system. This will comprise of components that will enable operation on one gaseous fuel type, such as natural gas, LP vapor or LP liquid. Some gas generators are also available with dual fuel systems that will allow operation on either natural gas and LP vapor or natural gas and LP liquid. These factory fitted fuel system components must be considered as only part of an overall gas supply system. The installer is again responsible for ensuring that the complete fuel supply system is compliant with all applicable regulations and codes.

12.1 Sizing Tanks for LPG Vaporous and Liquid Supply

For LPG tanks the vendor should be advised of the following requirements in order to supply an appropriate tank.

- The minimum ambient temperature as this will affect the size of tank required to obtain feed pressure.
- The duration of running required by the customer.
- The rate at which energy must be supplied.

Taking an example of a 75 eKW genset output:
Typical efficiency for conversion
of mechanical – electrical 85%
75 / 0.85 = 88.23 kW
Typical efficiency for conversion of
Fuel – mechanical - 33%
88.23 / 0.33 = 267.36 kW
kW-h x 3.6 = MJ/h
267.36 x 3.6 = **962.49 J/h**

The efficiencies and procedure above can be used for all ratings to quote energy consumption in **J/hour**.

This figure will allow the vendor to work out consumption in terms of volume of fuel at the quality they supply and size their tank and plumbing appropriately.

12.2 Natural Gas Fuel System

Figure 12.2 illustrates a typical natural gas fuel supply system (please note that other components or system layouts may be required for compliance with local gas codes and regulations). Natural gas is usually piped from the main distribution system to the generator site by the local distribution company. The gas supply pressure in this piped supply will vary from area to area and from distribution system to distribution system and may be legislated by local gas codes. A primary regulator is typically required to reduce this piped gas supply pressure to a safe working level before it enters the generator site. This primary regulator can usually be obtained from the local gas distribution company.

The primary regulator should be sized correctly to give a maximum outlet pressure of 20" water column and be of sufficient size to flow the specified maximum gas volume required by a particular gas generator at the required minimum dynamic pressure (typically 7" water column). The optimum natural gas supply pressure at the generator gas connection point (at the edge of the baseframe) is 11" water column. An approved flexible gas fuel line should be used for taking the gas supply to the generator's gas connection point. Manual shut-off valves should be fitted at appropriate points in the system and as specified by local gas codes and regulations.

Flow of gas supplied to the generator gas connection point is controlled by a solenoid shut-off valve. On generator operation, this allows gas to flow through the generator mounted secondary regulator to the generator carburetor. The solenoid shut-off valve automatically cuts-off gas flow during generator shut-down. The fuel supply is also sealed off within the carburetor when the generator is stopped.

If the BTU content of the natural gas supply is low, an increase in the minimum gas inlet pressure to 15" water will typically compensate for fuel down to 900 - 950 BTU heating value. Natural gas with even less heating value, e.g. in the 800 BTU range, requires a special gas carburetor.

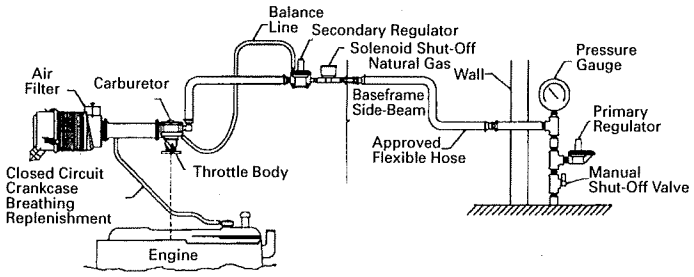

Figure 12.2: Typical Natural Gas Supply System

12.3 LP Vapor Fuel System

A schematic indicating the typical main components of this type of fuel system are shown in Figure 12.3. An expansion section of the LP storage tank allows the LP fuel to expand from the liquid to the vapor state. The expansion section of the tank typically represents 10-20% of the total storage tank volume. Expanded LP vapors are then withdrawn from this section of the storage tank and are supplied to the gas generator.

Ambient temperatures must be high enough to provide adequate vaporization to sustain the draw-off rate. If the draw-off rate is high and ambient temperatures are low, the vaporization rate may not be sufficient to sustain the gas flow required. LP Vapor withdrawal systems are therefore typically suited for use with smaller engines. As a result care should taken in matching LP storage tank size for vapor withdrawal systems and generator size.

As with the natural gas system the flow of LP vapor supplied to the generator gas connection point is controlled by a solenoid shut-off valve. On generator operation, this allows gas to flow through the generator mounted secondary regulator to the generator carburetor. The solenoid shut-off valve automatically cuts-off gas flow during generator shut-down. The fuel supply is also sealed off within the carburetor when the generator is stopped.

12.4 LP Liquid Fuel System

This type of system again utilizes LP fuel but with liquid withdrawal instead of vapor withdrawal as previously discussed. Liquid LP is delivered directly to the generator where it passes through a fuel shut-off valve (typically operated via the engine manifold vacuum) to a 'vaporizer-regulator'. The vaporizer-regulator vaporizes the LP liquid fuel (using engine coolant as the heat source) and provides a regulated LP vapor supply to the generator carburetor. When a LPG fuel is to be used in low ambient temperatures, a liquid withdrawal system is preferred. Vapor withdrawal requires more ambient heat to be absorbed into the tank to provide feed pressure. A typical system is illustrated in Figure 12.4.

12.5 Dual Fuel Systems

These systems allow operation on either natural gas and LP vapor or natural gas and LP liquid. Such systems are useful where there is a possibility of failure of the piped natural gas supply or where focused gas tariffs make generator operation on natural gas excessively costly during peak tariff periods. These dual fuel systems are factory fitted and provide for automatic changeover from natural gas operation to LP vapor or LP liquid operation. Gen sets with these fuel systems will have natural gas rating on either fuel.

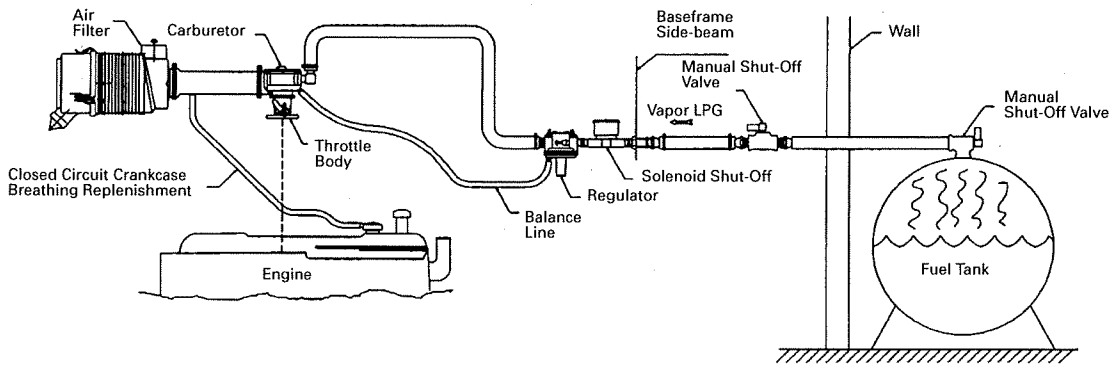

Figure 12.3: Typical LP Vapor Fuel Supply System

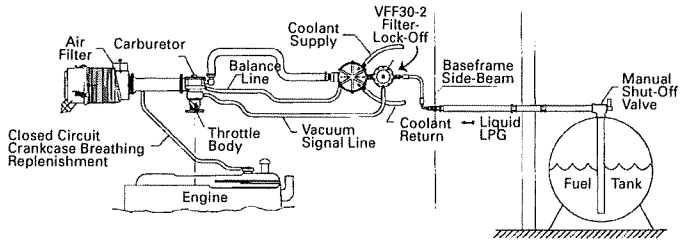

Figure 12.4: Typical Liquid Gas Fuel Supply System

Figure 12.5 shows a typical natural gas / LP vapor dual fuel system. The natural gas supply pressure is monitored by a low pressure switch. When this supply pressure drops below an adjustable threshold level the LP vapor solenoid shut-off valve is opened and the natural gas solenoid shut-off is closed. The LP vapor then flows through a dedicated regulator to the engine carburetor.

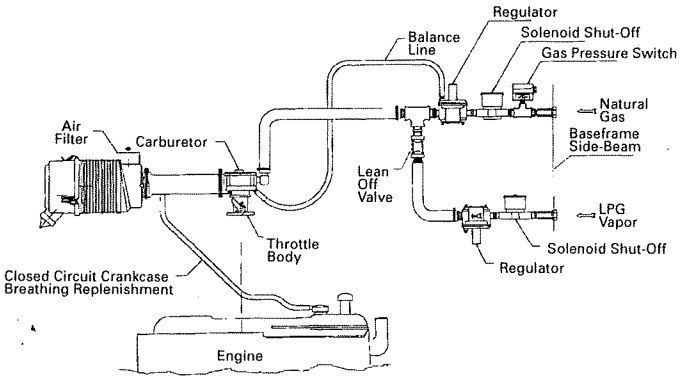

Figure 12.5: Natural Gas / LP Vapor Dual Fuel System

Figure 12.6 shows a typical natural gas / LP liquid dual fuel system. Its operation is similar to the dual fuel system already discussed. The natural gas supply pressure is monitored by a low pressure switch. When this supply pressure drops below an adjustable threshold level the natural gas solenoid shut-off is closed. The loss in pressure in the natural gas line causes the vaporizer-regulator to open, permitting regulated LP vapor to flow to the engine carburetor. LP liquid flow to the vaporizer-regulator is controlled by a vacuum operated shut-off valve.

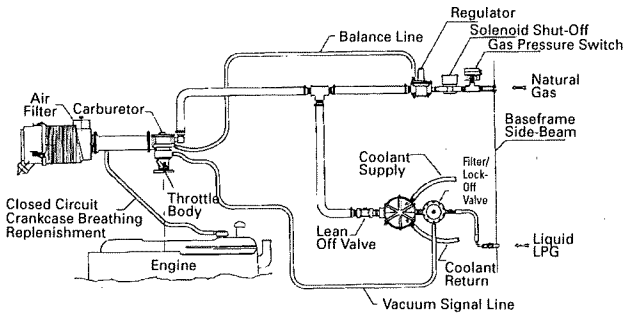

Figure 12.6: Natural Gas / LP Liquid Dual Fuel System

12.6 Gaseous Fuel Lines

Gaseous fuel lines should be made of black iron (sch. 40) and should be rigidly mounted with protection against vibration provided for. An approved flexible gas fuel line should be used for connecting between rigid gas pipework and the generator gas connection point (typically at the edge of the generator baseframe). Every effort should be made to ensure that pipework is sized correctly to provide an adequate gas supply for the generator under all loading conditions.

The complete fuel system must be purged and leak tested before being put into service with further checks for leaks to be conducted thereafter on a regular basis. Any leaks found must be corrected immediately.

Novi Engine Division
25000 Novi Road
Novi, MI 48375
(248) 349-7050

CONTRACTOR PRE-START UP CHECK LIST

Please complete the following:

PROJECT NAME: EAST JORDAN KODIAK **TAG # TBD**

( ) 1. All components as supplied on the bill of material are installed.

( ) 2. The DC control wires and AC power circuits are in separate conduits and terminated at both ends.

( ) 3. The battery charger and engine block heater have the proper AC supply Voltage, fused, from the customer source. Also, the battery charger alarm and starter connections are terminated at the generator, if required.

( ) 4. The AC electrical connections are terminated at the generator and at the automatic transfer switch.

( ) 5. Utility source is available at the transfer switch and building load is available.

( ) 6. The fuel supply lines are completed the natural gas supply is available (Standard Olympian units 7 - 11 WG)

( ) 7. Lube oil and coolant are installed.

( ) 8. The intake louvers and radiator are free from obstruction. The room/enclosure has adequate air flow and is clean.

( ) 9. The exhaust system is installed including: rain caps, drip shields, roof or wall thimbles, flexible connectors etc.

OPTIONAL

( ) 10. You are ready for Operation and Maintenance training at the time of start up.

Please sign and E-Fax to: Ryan Solomon

_____ **Date**_____

Effective with sales to the first user on or after August 1, 2014

CATERPILLAR LIMITED WARRANTY

Industrial, Petroleum, Locomotive, and Agriculture Engine Products and Electric Power Generation Products

Worldwide

Caterpillar Inc. or any of its subsidiaries ("Caterpillar") warrants new and remanufactured engines and electric power generation products sold by it (including any products of other manufacturers packaged and sold by Caterpillar), to be free from defects in material and workmanship.

This warranty does not apply engines sold for use in on-highway vehicle or marine applications; engines in machines manufactured by or for Caterpillar; C175, 3500 and 3600 series engines used in locomotive applications; 3000 Family engines, C0.5 through C4.4 and ACERT™ (C6.6, C7, C7.1, C9, C9.3, C11, C13, C15, C18, C27, and C32) engines used in industrial, mobile agriculture and locomotive applications; or Cat® batteries. These products are covered by other Caterpillar warranties.

This warranty is subject to the following:

Warranty Period

- For industrial engines, engines in a petroleum applications or Petroleum Power Systems (excluding petroleum fire pump application), or engines in a Locomotive application, or Uninterruptible Power Supply (UPS) systems, the warranty period is 12 months after date of delivery to the first user.
- For engines used in petroleum fire pump and mobile agriculture applications the warranty period is 24 months after date of delivery to the first user.
- For controls only (EPIC), configurable and custom switchgear products, and automatic transfer switch products, the warranty period is 24 months after date of delivery to the first user.
- For new CG132, CG170 and CG260 series power generation products the warranty period is 24 months/16,000 hours, whichever comes first, after date of delivery to first user.
- For electric power generation products other than CG132, CG170 and CG260 series in prime or continuous applications the warranty period is 12 months. For standby applications the warranty period is 24 months/1000 hours. For emergency standby applications the warranty period is 24 months/400 hours. All terms begin after date of delivery to the first user.
- For all other applications the warranty period is 12 months after date of delivery to the first user.

Caterpillar Responsibilities

If a defect in material or workmanship is found during the warranty period, Caterpillar will, during normal working hours and at a place of business of a Cat dealer or other source approved by Caterpillar:

- Provide (at Caterpillar's choice) new, Remanufactured, or Caterpillar approved repaired parts or assembled components needed to correct the defect.

Note: New, remanufactured, or Caterpillar approved repaired parts or assembled components provided under the terms of this warranty are warranted for the remainder of the warranty period applicable to the product in which installed as if such parts were original components of that product. Items replaced under this warranty become the property of Caterpillar.

- Replace lubricating oil, filters, coolant, and other service items made unusable by the defect.
- Provide reasonable and customary labor needed to correct the defect, including labor to disconnect the product from and reconnect the product to its attached equipment, mounting, and support systems, if required.

For new 3114, 3116, and 3126 engines and electric power generation products (including any new products of other manufacturers packaged and sold by Caterpillar):

- Provide travel labor, up to four hours round trip, if in the opinion of Caterpillar, the product cannot reasonably be transported to a place of business of a Cat dealer or other source approved by Caterpillar (travel labor in excess of four hours round trip, and any meals, mileage, lodging, etc. is the user's responsibility).

For all other products:

- Provide reasonable travel expenses for authorized mechanics, including meals, mileage, and lodging, when Caterpillar chooses to make the repair on-site.

User Responsibilities

The user is responsible for:

- Providing proof of the delivery date to the first user.
- Labor costs, except as stated under "Caterpillar Responsibilities," including costs beyond those required to disconnect the product from and reconnect the product to its attached equipment, mounting, and support systems.
- Travel or transporting costs, except as stated under "Caterpillar Responsibilities."
- Premium or overtime labor costs.
- Parts shipping charges in excess of those that are usual and customary.
- Local taxes, if applicable.
- Costs to investigate complaints, unless the problem is caused by a defect in Caterpillar material or workmanship.
- Giving timely notice of a warrantable failure and promptly making the product available for repair.

(Continued on reverse side...)

- Performance of the required maintenance (including use of proper fuel, oil, lubricants, and coolant) and items replaced due to normal wear and tear.
- Allowing Caterpillar access to all electronically stored data.

Limitations

Caterpillar is not responsible for:

- Failures resulting from any use or installation that Caterpillar judges improper.
- Failures resulting from attachments, accessory items, and parts not sold or approved by Caterpillar.
- Failures resulting from abuse, neglect, and/or improper repair.
- Failures resulting from user's delay in making the product available after being notified of a potential product problem.
- Failures resulting from unauthorized repairs or adjustments, and unauthorized fuel setting changes.
- Damage to parts, fixtures, housings, attachments, and accessory items that are not part of the engine, Cat Selective Catalytic Reduction System or electric power generation product (including any products of other manufacturers packaged and sold by Caterpillar).
- Repair of components sold by Caterpillar that is warranted directly to the user by their respective manufacturer. Depending on type of application, certain exclusions may apply. Consult your Cat dealer for more information.

This warranty covers every major component of the products. Claims under this warranty should be submitted to a place of business of a Cat dealer or other source approved by Caterpillar. For further information concerning either the location to submit claims or Caterpillar as the issuer of this warranty, write Caterpillar Inc., 100 N. E. Adams St., Peoria, IL USA 61629.

Caterpillar's obligations under this Limited Warranty are subject to, and shall not apply in contravention of, the laws, rules, regulations, directives, ordinances, orders, or statutes of the United States, or of any other applicable jurisdiction, without recourse or liability with respect to Caterpillar.

For products operating outside of Australia, Fiji, Nauru, New Caledonia, New Zealand, Papua New Guinea, the Solomon Islands and Tahiti, the following is applicable:

NEITHER THE FOREGOING EXPRESS WARRANTY NOR ANY OTHER WARRANTY BY CATERPILLAR, EXPRESS OR IMPLIED, IS APPLICABLE TO ANY ITEM CATERPILLAR SELLS THAT IS WARRANTED DIRECTLY TO THE USER BY ITS MANUFACTURER.

THIS WARRANTY IS EXPRESSLY IN LIEU OF ANY OTHER WARRANTIES, EXPRESS OR IMPLIED, INCLUDING ANY WARRANTY OF MERCHANTABILITY OR FITNESS FOR A PARTICULAR PURPOSE, EXCEPT CATERPILLAR EMISSION-RELATED COMPONENTS WARRANTIES FOR NEW ENGINES, WHERE APPLICABLE. REMEDIES UNDER THIS WARRANTY ARE LIMITED TO THE PROVISION OF MATERIAL AND SERVICES, AS SPECIFIED HEREIN.

CATERPILLAR IS NOT RESPONSIBLE FOR INCIDENTAL OR CONSEQUENTIAL DAMAGES.

CATERPILLAR EXCLUDES ALL LIABILITY FOR OR ARISING FROM ANY NEGLIGENCE ON ITS PART OR ON THE PART OF ANY OF ITS EMPLOYEES, AGENTS OR REPRESENTATIVES IN RESPECT OF THE MANUFACTURE OR SUPPLY OF GOODS OR THE PROVISION OF SERVICES RELATING TO THE GOODS.

IF OTHERWISE APPLICABLE, THE VIENNA CONVENTION ON CONTRACTS FOR THE INTERNATIONAL SALE OF GOODS IS EXCLUDED IN ITS ENTIRETY.

For personal or family use engines or electric power generation products, operating in the USA, its territories and possessions, some states do not allow limitations on how long an implied warranty may last nor allow the exclusion or limitation of incidental or consequential damages. Therefore, the previously expressed exclusion may not apply to you. This warranty gives you specific legal rights and you may also have other rights, which vary by jurisdiction. To find the location of the nearest Cat dealer or other authorized repair facility, call (800) 447-4986. If you have questions concerning this warranty or its applications, call or write:

In USA and Canada: Caterpillar Inc., Engine Division, P. O. Box 610, Mossville, IL 61552-0610, Attention: Customer Service Manager, Telephone (800) 447-4986. Outside the USA and Canada: Contact your Cat dealer.

For products operating in Australia, Fiji, Nauru, New Caledonia, New Zealand, Papua New Guinea, the Solomon Islands and Tahiti, the following is applicable:

THIS WARRANTY IS IN ADDITION TO WARRANTIES AND CONDITIONS IMPLIED BY STATUTE AND OTHER STATUTORY RIGHTS AND OBLIGATIONS THAT BY ANY APPLICABLE LAW CANNOT BE EXCLUDED, RESTRICTED OR MODIFIED ("MANDATORY RIGHTS"). ALL OTHER WARRANTIES OR CONDITIONS, EXPRESS OR IMPLIED (BY STATUTE OR OTHERWISE), ARE EXCLUDED.

NEITHER THIS WARRANTY NOR ANY OTHER CONDITION OR WARRANTY BY CATERPILLAR, EXPRESS OR IMPLIED (SUBJECT ONLY TO THE MANDATORY RIGHTS), IS APPLICABLE TO ANY ITEM CATERPILLAR SELLS THAT IS WARRANTED DIRECTLY TO THE USER BY ITS MANUFACTURER.

TO THE EXTENT PERMITTED UNDER THE MANDATORY RIGHTS, IF CATERPILLAR IS THE SUPPLIER TO THE USER, CATERPILLAR'S LIABILITY SHALL BE LIMITED AT ITS OPTION TO (a) IN THE CASE OF SERVICES, THE SUPPLY OF THE SERVICES AGAIN OR THE PAYMENT OF THE COST OF HAVING THE SERVICES SUPPLIED AGAIN, AND (b) IN THE CASE OF GOODS, THE REPAIR OR REPLACEMENT OF THE GOODS, THE SUPPLY OF EQUIVALENT GOODS, THE PAYMENT OF THE COST OF SUCH REPAIR OR REPLACEMENT OR THE ACQUISITION OF EQUIVALENT GOODS.

CATERPILLAR EXCLUDES ALL LIABILITY FOR OR ARISING FROM ANY NEGLIGENCE ON ITS PART OR ON THE PART OF ANY OF ITS EMPLOYEES, AGENTS OR REPRESENTATIVES IN RESPECT OF THE MANUFACTURE OR SUPPLY OF GOODS OR THE PROVISION OF SERVICES RELATING TO THE GOODS.

CATERPILLAR IS NOT LIABLE FOR INCIDENTAL OR CONSEQUENTIAL DAMAGES UNLESS IMPOSED UNDER MANDATORY RIGHTS.

IF OTHERWISE APPLICABLE, THE VIENNA CONVENTION ON CONTRACTS FOR THE INTERNATIONAL SALE OF GOODS IS EXCLUDED IN ITS ENTIRETY.

©2014 Caterpillar All Rights Reserved.
CAT, CATERPILLAR, their respective logos, "Caterpillar Yellow," the "Power Edge" trade dress as well as corporate and product identity used herein, are trademarks of Caterpillar and may not be used without permission.

OLYMPIAN™

G300LG6

14.2L

Industrial Spark-Ignited Generator Set

EPA Certified Stationary Emergency

G300LG6 300 kW

Standby Power Rating
300 kW 375 kVA 60 Hz

Prime Power Rating*
270 kW 338 kVA 60 Hz

*Built in the USA using domestic and foreign parts

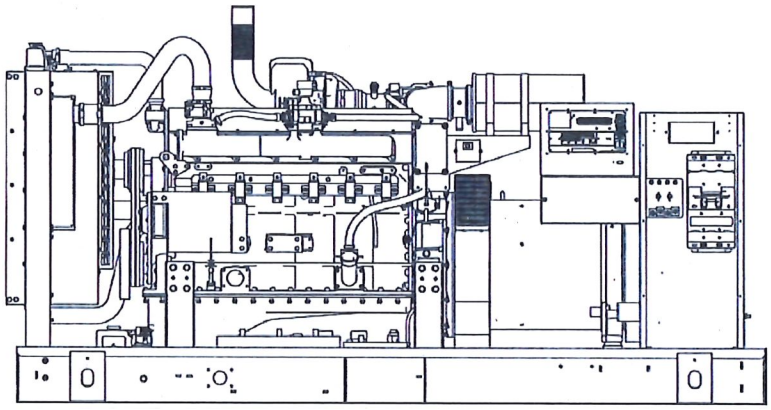

*EPA Certified Prime ratings are not available in the U.S. or its Territories

Image used for illustration purposes only

Codes and Standards

Olympian products are designed to the following standards:

UL2200, UL508, UL142, UL498

NFPA70, 99, 110, 37

NEC700, 701, 702,708

ISO9001, 8528, 3046, 7637, Pluses #2b, 4

NEMA ISC10, MG1, 250, ICS6, AB1

ANSI C62.41

American National Standards Institute

IBC 2009, CBC 2010, IBC2012, ASCE 7-05, ASCE 7-10, ICC-ES AC-156 (2012)

Prime power or standby service, Olympian Natural gas or Propane fuel generator sets deliver dependable, clean, economical power – even in the most demanding conditions – and Olympian gensets are available in a wide range of configurations with optional equipment.

Olympian generator sets are designed, engineered and manufactured for optimal performance. All major components are tested individually; once assembled, the entire unit is tested at and above 100% of rated load for safety and operation.

These complete, ready-to-run packages have another distinct advantage. They all come with the comprehensive service and support of Cat® dealers – beginning with prompt delivery and ongoing support throughout the life of the generator set.

G300LG6 300 kW

OLYMPIAN™

LG Series

Standard Features

ENGINE SYSTEM

General

- Oil Drain Extension
- Air Cleaner
- Fan Guard
- Stainless Steel flexible exhaust connection
- Critical Exhaust Silencer
- Factory Filled Oil
- Radiator duct adapter (open set only)

Fuel System

- Primary and Secondary Fuel Shutoff
- Flexible Fuel Line - NPT Connection

Cooling System

- Closed Coolant Recovery System
- UV/Ozone Resistant hoses
- Factory-installed Radiator
- Radiator drain extension
- 50/50 Ethylene glycol antifreeze

Engine Electrical System

- Battery charging alternator
- Battery Cables
- Battery Tray
- Solenoid activated starter motor
- Rubber-booted engine electrical connections

ALTERNATOR SYSTEM

- Class H insulation material
- 2/3 Pitch
- Skewed Stator
- Permanent Magnet Excitation
- Sealed Bearings
- Amortisseur winding
- Full load capacity alternator

GENERATOR SET

- Internal Genset Vibration Isolation
- Separation of circuits - high/low voltage
- Separation of circuits - multiple breakers
- Wrapped Exhaust Piping
- Standard Factory Testing
- 2 Year Limited Warranty (Standby rated units)
- 1 Year Limited Warranty (Prime rated units)
- Silencer mounted in the discharge hood (enclosed only)

ENCLOSURE (if selected)

- Rust-proof fasteners with nylon washers to protect finish
- High performance sound-absorbing material
- Gasketed doors
- Stamped air-intake louvers
- Air discharge hoods for radiator-upward pointing
- Stainless steel lift off door hinges
- Stainless steel lockable handles

CONTROL SYSTEM

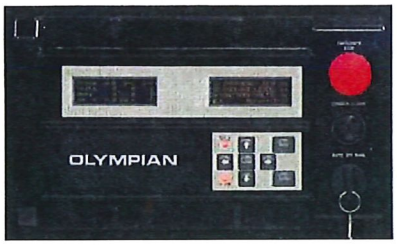

Control Panel

- Digital H Control Panel - Dual 4x20 Display
- Programmable Crank Limiter
- 7-Day Programmable Exerciser
- Special Applications Programmable PLC
- RS-232/485
- All-Phase Sensing DVR
- Full System Status
- Utility Monitoring
- Low Fuel Pressure Indication
- 2-Wire Start Compatible
- Power Output (kW)
- Power Factor
- kW Hours, Total & Last Run
- Real/Reactive/Apparent Power
- All Phase AC Voltage
- All Phase Currents
- Oil Pressure
- Coolant Temperature
- Coolant Level
- Engine Speed
- Battery Voltage
- Frequency
- Date/Time Fault History (Event Log)
- Isochronous Governor Control
- Waterproof/sealed Connectors
- Audible Alarms and Shutdowns
- Not in Auto (Flashing Light)
- Auto/Off/Manual Switch
- E-Stop (Red Mushroom-Type)
- NFPA110 Level I and II (Programmable)
- Customizable Alarms, Warnings, and Events
- Modbus protocol
- Predictive Maintenance algorithm
- Sealed Boards
- Password parameter adjustment protection
- Single point ground
- 15 channel data logging
- 0.2 msec high speed data logging
- Alarm information automatically comes up on the display

Alarms

- Oil Pressure (Pre-programmable Low Pressure Shutdown)
- Coolant Temperature (Pre-programmed High Temp Shutdown)
- Coolant Level (Pre-programmed Low Level Shutdown)
- Low Fuel Pressure Alarm
- Engine Speed (Pre-programmed Over speed Shutdown)
- Battery Voltage Warning
- Alarms & Warnings time and date stamped
- Alarms & Warnings for transient and steady state conditions
- Snap shots of key operation parameters during Alarms & Warnings
- Alarms and Warnings spelled out (no alarm codes)

G300LG6 3

OLYMPIAN™

LG Series

application and engineering data

ENGINE SPECIFICATIONS

General

Cylinder #	6
Type	Inline
Displacement - L (Cu In)	14.17 (864.71)
Bore - mm (in)	135 (5.31)
Stroke - mm (in)	165 (6.50)
Compression Ratio	9.5:1
Intake Air Method	Turbocharged/Aftercooled
Number of Main Bearings	7
Connecting Rods	Carbon Steel
Cylinder Head	Cast Iron GT250, OHV
Cylinder Liners	Ductile Iron
Ignition	Altronic CD1
Pistons	Aluminum
Crankshaft	Ductile Iron
Lifter Type	Solid
Intake Valve Material	Special Heat-Resistant Steel
Exhaust Valve Material	Alloy Steel, High Temp
Hardened Valve Seats	Alloy Steel, High Temp

Engine Governing

Governor	Electronic
Frequency Regulation (Steady State)	+/- 0.25%

Lubrication System

Oil Pump Type	Gear
Oil Filter Type	Full-flow Cartridge
Crankcase Capacity - L (qts)	34.3 (36.2)

Cooling System

Cooling System Type	Pressurized Closed Recovery
Water Pump Flow - gpm (lpm)	94 (356)
Fan Type	Pusher
Fan Speed (rpm)	1894
Fan Diameter - mm (in)	762 (30)
Coolant Heater Wattage	2000
Coolant Heater Standard Voltage	240 V

Fuel System

Fuel Type	Natural Gas
Carburetor	Down Draft
Secondary Fuel Regulator	Standard
Fuel Shut Off Solenoid	Standard (Dual)
Operating Fuel Pressure (Standard)	7" - 11" H_2O

Engine Electrical System

System Voltage	24 VDC
Battery Charger Alternator	Standard
Battery Size	See Battery Index 0161970SBY
Battery Voltage	(2) 12 VDC
Ground Polarity	Negative

ALTERNATOR SPECIFICATIONS

Standard Model	520mm
Poles	4
Field Type	Revolving
Insulation Class - Rotor	H
Insulation Class - Stator	H
Total Harmonic Distortion	<5%
Telephone Interference Factor (TIF)	<50
Standard Excitation	Permanent Magnet
Bearings	Sealed Ball
Coupling	Direct, Flexible Disc
Prototype Short Circuit Test	Yes

Voltage Regulator Type	Full Digital
Number of Sensed Phases	3
Regulation Accuracy (Steady State)	+/- 0.25%

OLYMPIAN™

LG Series

operating data

POWER RATINGS – NATURAL GAS

	Natural Gas	
Three-Phase 120/208 VAC @0.8pf	300 kW	Amps: 1041
Three-Phase 120/240 VAC @0.8pf	300 kW	Amps: 902
→ Three-Phase 277/480 VAC @0.8pf	300 kW	Amps: 451
Three-Phase 346/600 VAC @0.8pf	300 kW	Amps: 361

STARTING CAPABILITIES (sKVA)

		sKVA vs. Voltage Dip											
		480 VAC						208/240 VAC					
Alternator	kW	10%	15%	20%	25%	30%	35%	10%	15%	20%	25%	30%	35%
Standard	300	303	454	605	757	908	1059	227	341	454	568	681	794

FUEL CONSUMPTION RATES*

Natural Gas – ft^3/hr (m^3/hr)

Percent Load	Standby
25%	1029.7 (29.2)
50%	1837.3 (52.0)
75%	2592.2 (73.4)
100%	3426.3 (97)

* Fuel supply installation must accommodate fuel consumption rates at 100% load.

COOLING

		Standby
Air Flow (inlet air combustion and radiator)	ft^3/min (m^3/min)	16,712 (473.2)
Coolant Flow per Minute	gpm (lpm)	110 (416)
Coolant System Capacity	gal (Liters)	14.5 (54.9)
Heat Rejection to Coolant	BTU/hr	945,659
Max. Operating Air Temp on Radiator	°F (°C)	104 (40)
Maximum Radiator Backpressure	in H_2O	0.5

COMBUSTION AIR REQUIREMENTS

		Standby
Flow at Rated Power	cfm (m^3/min)	765.6 (21.7)

ENGINE

		Standby
Rated Engine Speed	rpm	1800
Horsepower at Rated kW**	hp	460
Piston Speed	ft/min (m/min)	1949 (594)
BMEP	psi	234.2

EXHAUST

		Standby
Exhaust Flow (Rated Output)	cfm (m^3/min)	2677 (75.8)
Maximum Recommended Back Pressure	inHg	0.75
Exhaust Temp (Rated Output)	°F (°C)	1350 (732)
Exhaust Outlet Size (Open Set)	in	3.5" ID Flex (No muffler)

** Refer to "Emissions Data Sheet" for maximum bHP for EPA and SCAQMD permitting purposes.

Deration – Operational characteristics consider maximum ambient conditions. Derate factors may apply under atypical site conditions. Please consult a CAT® Dealer for additional details. All performance ratings in accordance with ISO3046, BS5514, ISO8528 and DIN6271 standards.

G300LG6 300 kW

OLYMPIAN™

LG Series

dimensions, weights, and sound levels

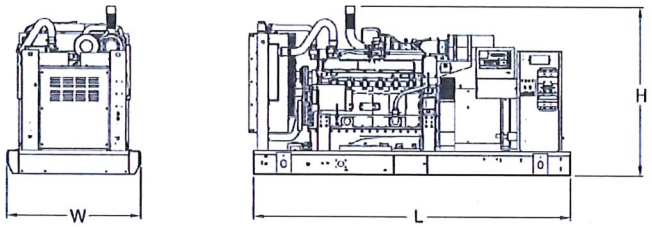

OPEN SET (Includes Exhaust Flex)

L x W x H (in (mm)	136 (3455) x 57.6 (1463) x 66.1 (1678)
Weight lbs (kg)	6274 (2852)
Sound Level (dBA*)	88

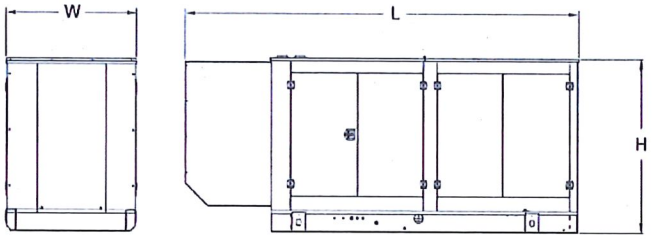

STANDARD ENCLOSURE

L x W x H (in (mm)	174.7 (4437) x 57.5 (1460) x 77.8 (1976)
Weight lbs (kg)	Steel: 7836 (3562) Aluminum: 7042 (3201)
Sound Level (dBA*)	85

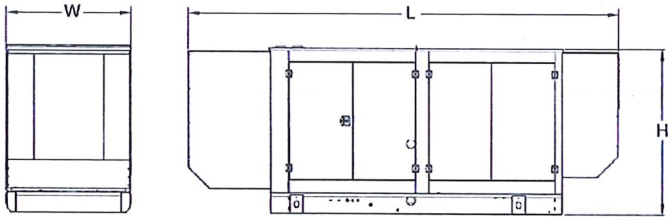

LEVEL 1 ACOUSTIC ENCLOSURE

L x W x H (in (mm)	200.2 (5085) x 57.5 (1460) x 77.80 (1976)
Weight lbs (kg)	Steel: 8298 (3772) Aluminum: 7242 (3292)
Sound Level (dBA*)	79

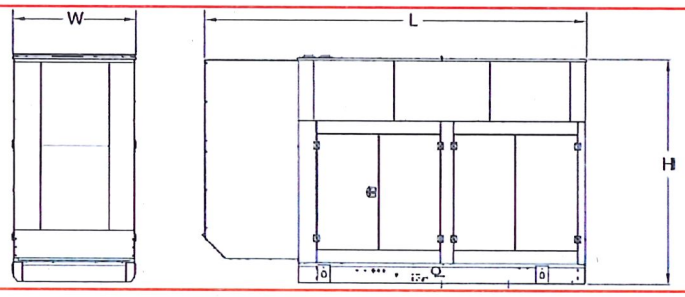

LEVEL 2 ACOUSTIC ENCLOSURE

L x W x H (in (mm)	180.6 (4588) x 57.5 (1460) x 107.3 (2725)
Weight lbs (kg)	Steel: 8870 (4032) Aluminum: 7487 (3403)
Sound Level (dBA*)	75

* All measurements are approximate and for estimation purposes only. Sound levels measured at 23 ft (7 m) and does not account for ambient site conditions.

Information contained in this publication may be considered confidential. Discretion is recommended when distributing.
Materials and specifications are subject to change without notice.
CAT, CATERPILLAR, their respective logos, OLYMPIAN, "Caterpillar Yellow", the "Power Edge" trade dress as well as corporate and product identity used herein, are trademarks of Caterpillar and may not be used without permission.

www.OlympianPower.com
OL0032Y09-C 7/29/15
© 2015 Caterpillar
All rights reserved.
Printed in U.S.A

H-100 Control Panel

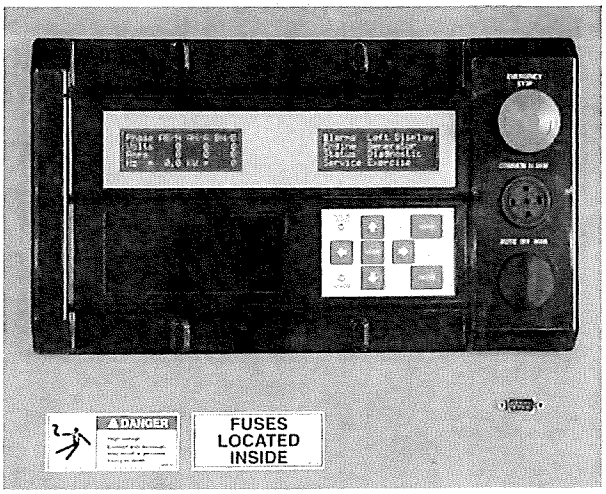

DESCRIPTION

- Digital controls for all safety shutdowns
- Isochronous governor control
- Digital 3o sensing voltage regulator
- Sealed Digital Circuit Board
- 2 Amp static battery charger
- Mates with HTS transfer switch and any 2-wire start ATS
- Alarm and event logging
- Built-in diagnostics
- Internal PLC
- Optional modem with dialout

STANDARD FEATURES

The H-100 Control Panel is a digital microprocessor electronic controller.

- Two 4 line x 20 displays
- Full system status
- 3 phase sensing digital voltage regulator
- Remote ports
  - RS232
  - RS485
  - Canbus
- Water proof connections
- All engine sensors are 4-20 ma for minimal interference
- Built in PLC

In addition, the generator set parameters can be manipulated and monitored without standing in front of the control panel with GenLink® software.

- Monitors utility voltage
- Monitors generator voltage
- Timer for line interrupt delay
- Timer for engine warmup
- Timer for minimum engine run time
- Timer for return to utility position
- Timer for engine cooldown
- Built in exerciser timer (7 day)
- Additional 2 wire start controls for any 2 wire transfer switch.

OLYMPIAN™

FEATURES

- Full range stand-by operation
- Full system status
  - 3 phase AC volts
  - 3 phase amps
  - kW
  - Power factor
  - Reactive power
  - Oil pressure
  - Water temperature
  - Water level
  - Oil temperature (optional)
  - Fuel pressure
  - Engine speed
  - Battery voltage
  - Alternator frequency
  - Time
  - Date
  - Transfer switch status
  - Run hours
  - Service reminders
  - Trending
  - Fault history (alarm log)
  - I^2t function for full generator protection
  - Built in PLC for special applications
- Shutdowns
  - Overvoltage
  - Overspeed
  - Low oil pressure
  - High coolant temperature
  - Low coolant level
- Remote communication
  - RS232
  - Optional modem
  - Canbus
- Configurable to NFPA 110, level 1 or 2
- Programmable auto crank
- Emergency Stop
- On Off Manual Switch
- Not in Auto flashing light
- Audible alarm for fault condition
- Transfer switch logic communicates with HTS transfer switch
- Weekly exerciser (programmable)
- Selectable Low speed exercise
- Digital voltage regulator with 3 phase sensing (3 phase units)
- Isochronous governor
- Waterproof electrical connectors
- Temperature Range -40° to 70° C

Information contained in this publication may be considered confidential.
Discretion is recommended when distributing.
Materials and specifications are subject to change without notice.
CAT, CATERPILLAR, OLYMPIAN, their respective logos and "Caterpillar Yellow", as well as corporate and product identity used herein, are trademarks of Caterpillar and may not be used without permission.

© 2009 Caterpillar
All rights reserved.
Printed in U.S.A.

OLYMPIAN™

125A Load Center

Accessories

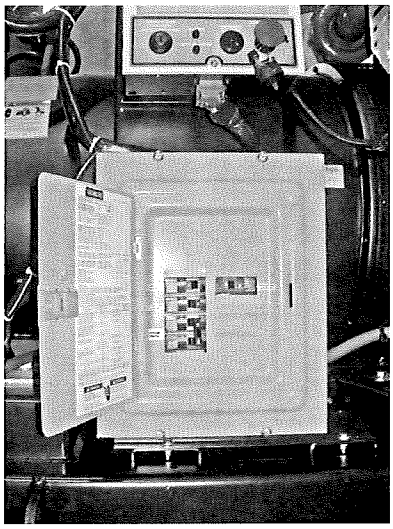

(NEMA 1 Enclosure Shown)

DESCRIPTION

The 125A Load Center is a unit-mounted distribution panel that is optional equipment on Olympian generator sets that utilize the H-100 control system. This main lug load center includes all of the circuit breakers required for the coolant heater, battery charger, and other factory-installed optional AC loads within the generator set, and serves as a convenient connection point for the customer's utility feed for these AC loads. All breakers are labeled for specific load circuits.

SPECIFICATIONS

- Siemens part numbers:

  NEMA 1: E0816ML1125SCU (applies to open gensets)
  NEMA 3R: W0816ML1125CU (applies to enclosed gensets)
- 125A Main Lugs EQ Load Center
- 100,000A IR
- Single phase, copper bus
- UL listed
- Uses Siemens QP type circuit breakers
- Maximum of 8 single pole breakers
- Maximum of 4 two pole 240V breakers
- Mounted on genset frame near control panel/display unit*
- Dimensions (inches):

  NEMA 1: 14.75H x 12.375W x 3.875D
  NEMA 3R: 14.75H x 12.128W x 4.25D

*Please refer to applicable generator set installation drawing for load center location details.

Information contained in this publication may be considered confidential. Discretion is recommended when distributing.
Materials and specifications are subject to change without notice.
CAT, CATERPILLAR, their respective logos, OLYMPIAN, "Caterpillar Yellow", the "Power Edge" trade dress as well as corporate and product identity used herein, are trademarks of Caterpillar and may not be used without permission.

www.OlympianPower.com
018363Y09-C 02/28/14
© 2014 Caterpillar
All rights reserved.
Printed in U.S.A.

SH	REV	WINDCHILL VERSION
1/1	B	B.3

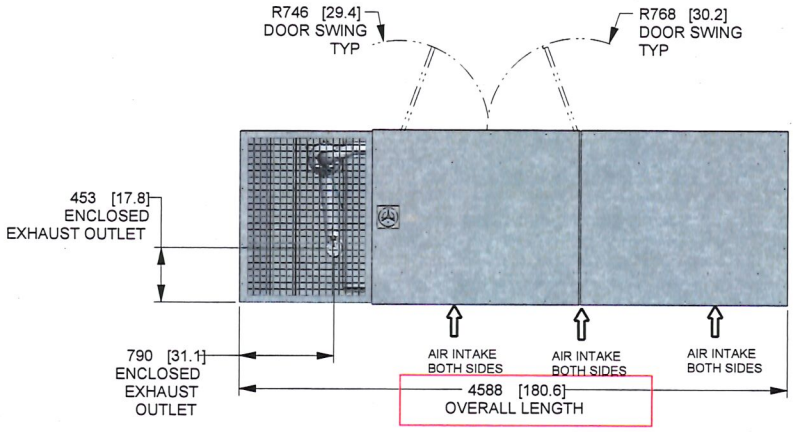

FOR ALL STUB-UP, WEIGHT, AND C.O.G. DETAILS, SEE
CORRESPONDING OPEN SET DRAWING PER UNIT CONFIGURATION

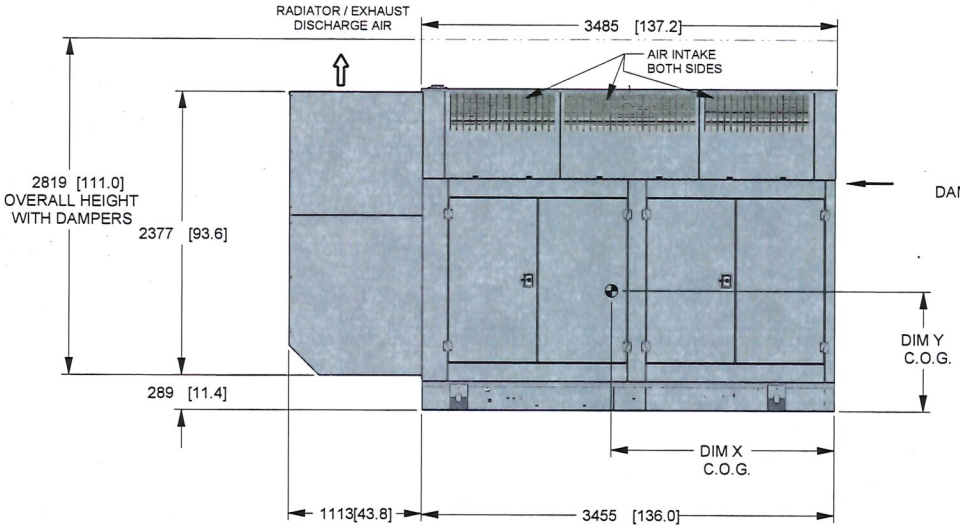

DAMPERS INSTALLED HERE

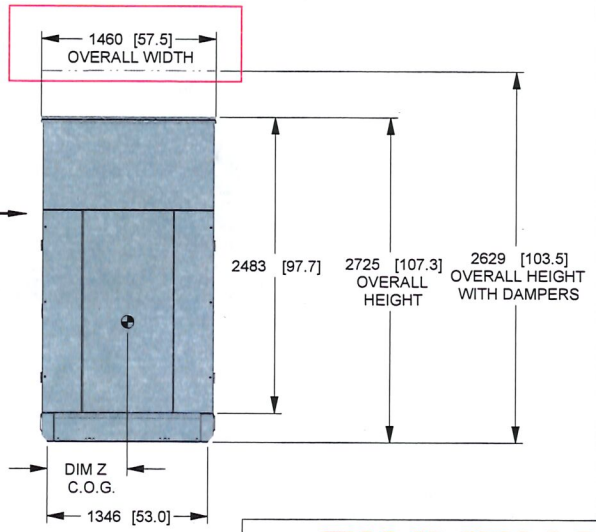

DRAWING CREATED FROM PRO/ENGINEER
3D FILE. ECO MODIFICATION TO BE
APPLIED TO SOLID MODEL ONLY.

DIMENSIONS ARE IN MILLIMETERS [INCHES]

INSTALLATION DRAWING

ELECTRONICALLY APPROVED
INSIDE WINDCHILL

OLYMPIAN™

TITLE

L2A ENCLOSURE
G14.2L
G230LG6, G230LG3, G275LG6, G275LG3
G250LG6, G250LG3, G300LG6, G300LG3

ISSUE DATE:	11/26/14			
SIZE	CAGE NO	DWG NO		REV
B	N/A	0L0469CY09		B
SCALE 0.025	WT-KG 0.000	SHEET 1 of 1		

SH	REV	WINDCHILL VERSION
1/4	B	B.5

Notes:
1. CONTROL PANEL. (OPTIONAL BATTERY CHARGER INSIDE).
2. 120V, 20A GFCI & 250V, 15A OUTLET (OPTIONAL).
3. CONNECTION POINTS FOR CONTROL WIRES PROVIDED IN THE LOW VOLTAGE CONNECTION BOX (USE LOW VOLTAGE STUB-UP AREA).
4. BATTERY (24 VOLT NEGATIVE GROUND SYSTEM).
5. MAIN LINE CIRCUIT BREAKER (MLCB), AC LOAD LEADS. (DIMENSIONS MAY VARY DUE TO UNIT CONFIGURATION)
6. CENTER OF GRAVITY AND WEIGHT MAY CHANGE DUE TO UNIT OPTIONS.

7. ENGINE SERVICE CONNECTIONS:
   INLET NATURAL GAS = 2-1/2" NPT FEMALE COUPLING
   INLET DIESEL = N/A
   RETURN DIESEL = N/A
   OIL DRAIN = 1/2" NPT FEMALE COUPLING
   RADIATOR DRAIN = N/A
   FLEX PIPE OUTLET = 3.5" I.D. PIPE
   EXHAUST OUTLET = 5" O.D. PIPE
***** SEE GENERATOR SIZING GUIDE FOR FUEL PIPE SIZING TO SUIT APPLICATION *****

8. AUXILARY AC CONNECTION FOR UNIT OPTIONS ARE LOCATED IN HIGH VOLTAGE CONNECTION BOX, UNLESS AN OPTIONAL LOAD CENTER IS INSTALLED.
9. EXHAUST PIPES MAY BE ROTATED TO ALLOW MUFFLER TO POINT OUT TO THE RIGHT OR LEFT SIDE OF GENERATOR. (MAY NOT APPLY TO ALL UNITS)
10. GENERATOR SET MUST BE INSTALLED SUCH THAT FRESH COOLING AIR IS AVAILABLE AND DISCHARGE AIR FROM THE RADIATOR IS NOT RECIRCULATED.
11. BOTTOM OF GENERATOR SET MUST BE ENCLOSED TO PREVENT PEST INTRUSION AND RECIRCULATION OF DISCHARGE AIR AND/OR IMPROPER COOLING AIR FLOW.
12. EXHAUST SYSTEM MAXIMUM BACK PRESSUE = 10" H2O POST SILENCER.
13. INSTALL EXHAUST BLANKETS ALONG THIS LINE.
14. CONNECT THE OPEN SET EXHAUST PER NFPA 37
15. BLANKETS SHOULD NOT COVER OXYGEN SENSOR.
16. OXYGEN SENSOR MUST BE MOUNTED BETWEEN ENGINE OUTLET AND SILENCER INLET AS SHOWN. IF ELBOW IS REQUIRED, ONLY SINGLE ELBOW MAY BE USED.
17. CATALIZED SILENCER (FOR EPA UNITS) MUST BE MOUNTED IN DESCRIBED POSITION. FAILING TO FOLLOW THESE INSTRUCTIONS WHEN INSTALLING A CERTIFIED ENGINE IN A PIECE OF STATIONARY EQUIPMENT VIOLATES FEDERAL LAW 40 CFR 1068.105(b), SUBJECT TO FINES OR PENALTIES AS DESCRIBED IN THE CLEAN AIR ACT.
18. BOLTS OR STUDS USED TO MOUNT UNIT TO PAD SHALL BE 5/8 - 11 GRADE 5.

ADDITIONAL NOTES:
FOR WEIGHT AND CENTER OF GRAVITY DATA SEE NOTE 6, AND SHEET 3-4.

FOR REFERENCE ONLY

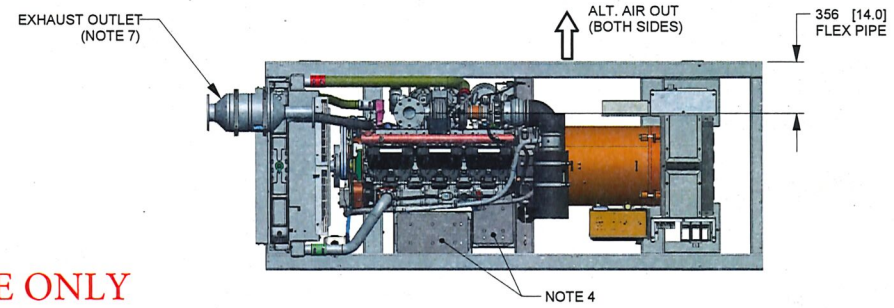

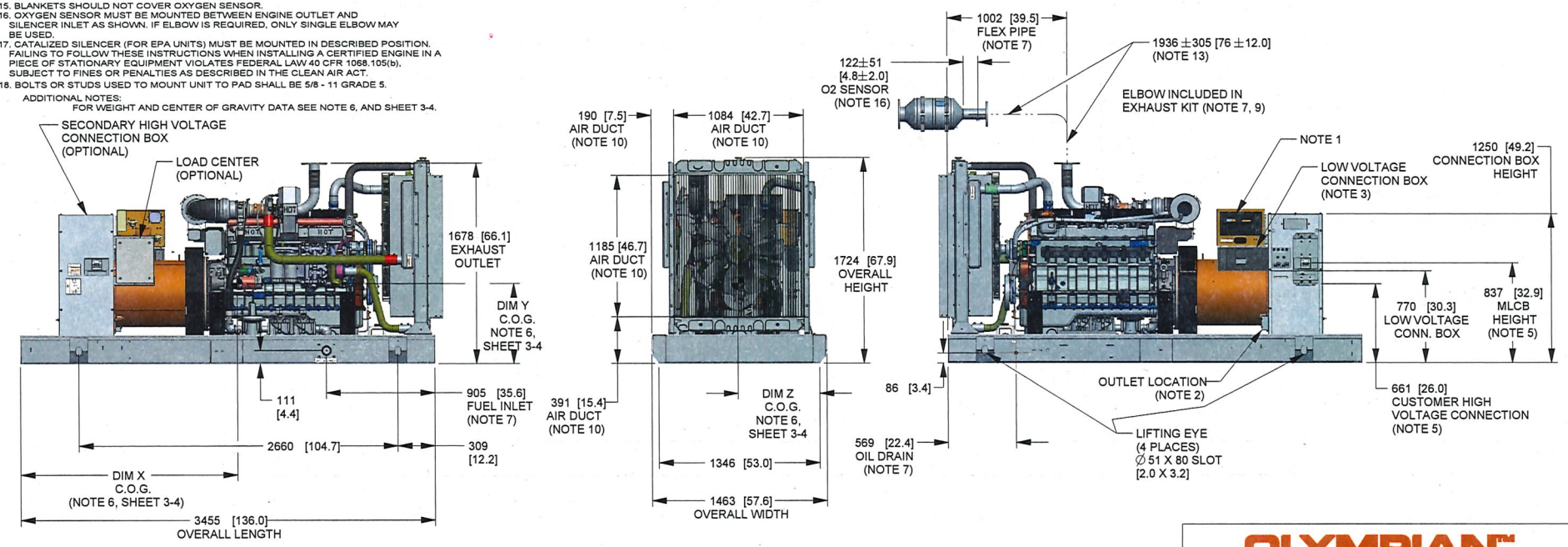

DRAWING CREATED FROM PRO/ENGINEER 3D FILE. ECO MODIFICATION TO BE APPLIED TO SOLID MODEL ONLY.

DIMENSIONS ARE IN MILLIMETERS [INCHES]

INSTALLATION DRAWING

ELECTRONICALLY APPROVED
INSIDE WINDCHILL

OLYMPIAN™

TITLE
OPEN SET
G14.2L
G230LG6, G230LG3, G275LG6, G275LG3
G250LG6, G250LG3, G300LG6, G300LG3

ISSUE DATE:	11/26/14			
SIZE	CAGE NO	DWG NO		REV
B	N/A	0L0469Y09		B
SCALE	0.030	WT-KG	0.000	SHEET 1 of 4

SH	REV	WINDCHILL VERSION
2/4	B	B.5

RECOMMENDED ELECTRICAL STUB-UP

(HIGH VOLTAGE STUB-UP)
AC LOAD LEAD CONDUIT FOR PERMANENT MAGNET EXCITATION CONNECTION BOX

(LOW VOLTAGE STUB-UP)

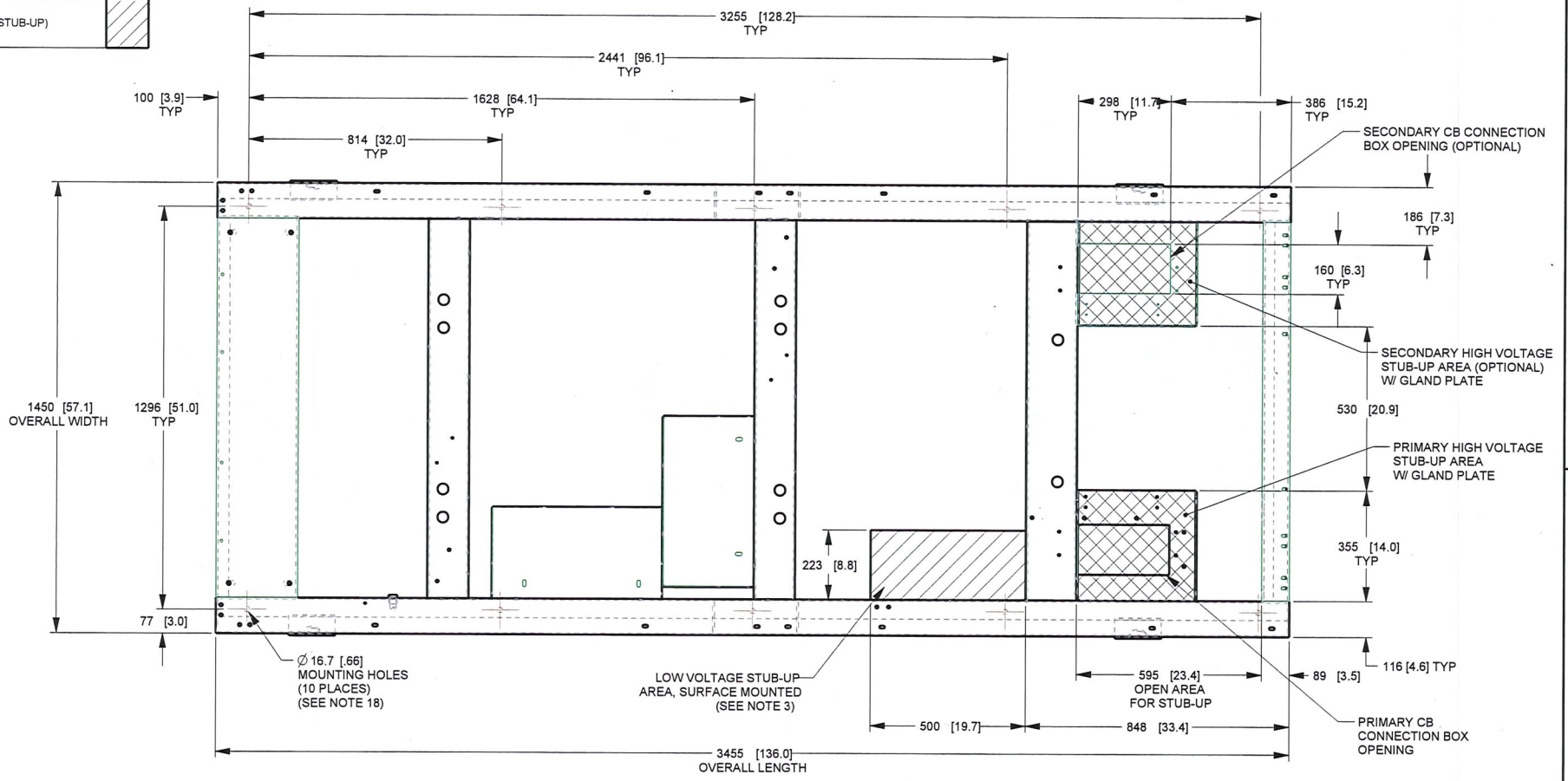

DRAWING CREATED FROM PRO/ENGINEER 3D FILE. ECO MODIFICATION TO BE APPLIED TO SOLID MODEL ONLY.

DIMENSIONS ARE IN MILLIMETERS [INCHES]

INSTALLATION DRAWING

ELECTRONICALLY APPROVED INSIDE WINDCHILL

OLYMPIAN™

TITLE

STUB-UP VIEW
G14.2L
G230LG6, G230LG3, G275LG6, G275LG3
G250LG6, G250LG3 G300LG6, G300LG3

ISSUE DATE:	11/26/14			
SIZE	CAGE NO	DWG NO		REV
B	N/A	0L0469Y09		B
SCALE	0.075	WT-KG	0.000	SHEET 2 of 4

OPEN SET

MODEL	VOLTAGE	WEIGHT	CENTER OF GRAVITY DIM X	CENTER OF GRAVITY DIM Y	CENTER OF GRAVITY DIM Z
SG/MG 275	208V, 240V, 480V	2,715kg [5,985 lbs]	1846 [72.7]	751 [29.6]	671 [29.6]
SG/MG 275	600V	2,722kg [6,000 lbs]	1833 [72.2]		
SG/MG 300	208V, 240V, 480V	2,822kg [6,200 lbs]	1799 [70.8]	752 [29.6]	
SG/MG 300	600V	2,852kg [6,274 lbs]	1789 [70.4]		

NOTE:
CENTER OF GRAVITY AND WEIGHT MAY CHANGE DUE TO UNIT OPTIONS

STD ENCLOSURE, STEEL

MODEL	VOLTAGE	WEIGHT	CENTER OF GRAVITY DIM X	CENTER OF GRAVITY DIM Y	CENTER OF GRAVITY DIM Z
SG/MG 275	208V, 240V, 480V	3,425 kg [7535 lbs]	1975 [77.8]	853 [33.6]	678 [26.7
SG/MG 275	600V	3,432 kg [7550 lbs]	1965 [77.4]		
SG/MG 300	208V, 240V, 480V	3,532 kg [7770 lbs]	1934 [76.1]	850 [33.5]	
SG/MG 300	600V	3,562 kg [7836 lbs]	1925 [75.8]		

STD ENCLOSURE, ALUMINUM

WEIGHT	CENTER OF GRAVITY DIM X	CENTER OF GRAVITY DIM Y	CENTER OF GRAVITY DIM Z
3,064 [6,741]	1,939 [76.3]	812 [32.0]	678 [26.7]
3,071 [6,756]	1,927 [76.3]	812 [32.0]	
3,171 [6,976]	1,894 [74.6]	811 [31.9]	
3,201 [7,042]	1884 [74.2]	810 [31.9]	

L1A ENCLOSURE, STEEL

MODEL	VOLTAGE	WEIGHT	CENTER OF GRAVITY DIM X	CENTER OF GRAVITY DIM Y	CENTER OF GRAVITY DIM Z
SG/MG 275	208V, 240V, 480V	3,635 kg [7997 lbs]	1885 [74.2]	874 [34.4]	678 [26.7]
SG/MG 275	600V	3,642 kg [8012 lbs]	1876 [73.9]	874 [34.4]	
SG/MG 300	208V, 240V, 480V	3,742 kg [8232 lbs]	1850 [72.8]	871 [34.3]	677 [26.7]
SG/MG 300	600V	3,772 kg [8298 lbs]	1842 [72.5]	870 [34.3]	

L1A ENCLOSURE, ALUMINUM

WEIGHT	CENTER OF GRAVITY DIM X	CENTER OF GRAVITY DIM Y	CENTER OF GRAVITY DIM Z
3,155 kg [6,941 lbs]	1895 [74.6]	824 [32.4]	678 [26.7]
3,162 kg [6,957 lbs]	1884 [74.2]		
3,262 kg [7,176 lbs]	1853 [73.0]	822 [32.4]	
3,292 kg [7,242 lbs]	1844 [72.6]		

L2A ENCLOSURE, STEEL

MODEL	VOLTAGE	WEIGHT	CENTER OF GRAVITY DIM X	CENTER OF GRAVITY DIM Y	CENTER OF GRAVITY DIM Z
SG/MG275	208V, 240V, 480V	3,895 kg [8,569lbs]	2010 [79.1]	1037 [40.8]	677 [26.7]
SG/MG275	600V	3,902 kg [8,584bs]	2001 [78.8]	1036 [40.8]	
SG/MG300	208V, 240V, 480V	4,002 kg [8,804lbs]	1973 [77.7]	1029 [40.5]	
SG/MG300	600V	4,032 kg [8,870lbs]	1965 [77.4]	1027 [40.4]	

L2A ENCLOSURE, ALUMINUM

WEIGHT	CENTER OF GRAVITY DIM X	CENTER OF GRAVITY DIM Y	CENTER OF GRAVITY DIM Z
3,266 kg [7,185 lbs]	1959 [77.1]	911 [35.9]	678 [26.7]
3,273 kg [7,201 lbs]	1949 [76.7]		
3,373 kg [7,421 lbs]	1917 [75.5]	906 [35.7]	
3,403 kg [7,487 lbs]	1908 [75.1]		

DRAWING CREATED FROM PRO/ENGINEER 3D FILE. ECO MODIFICATION TO BE APPLIED TO SOLID MODEL ONLY.

INSTALLATION DRAWING

ELECTRONICALLY APPROVED INSIDE WINDCHILL

OLYMPIAN™

TITLE
STD ENCLOSURE
G14.2L
G230LG6, G230LG3. G275LG6, G275LG3
G250LG6, G250LG3 G300LG6, G300LG3

ISSUE DATE: 11/26/14

SIZE	CAGE NO	DWG NO	REV
B	N/A	0L0469Y09	B

SCALE 0.030 | WT-KG 0.000 | SHEET 4 of 4

OLYMPIAN™

Engine Options

Coolant Heater
Hotflow, 1500W

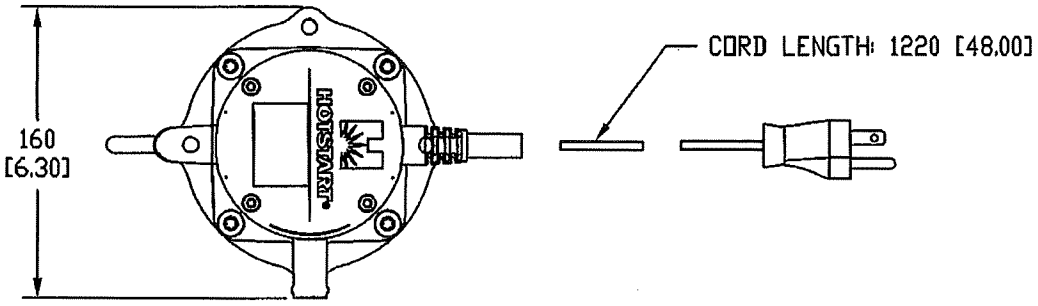

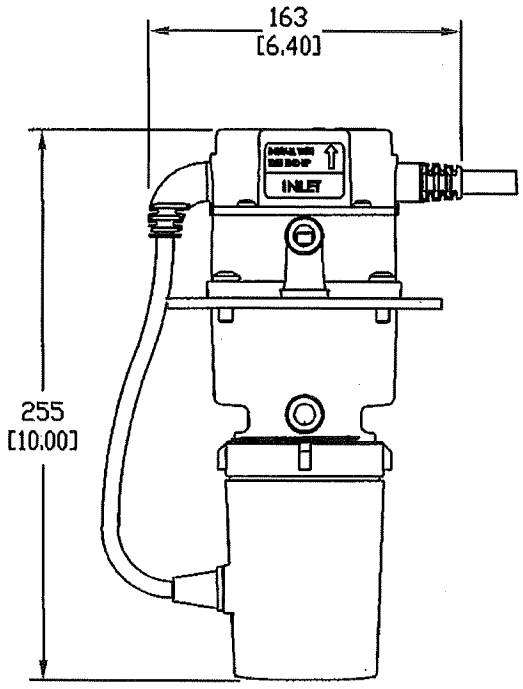

NOTES:
1500W, 120VAC
FLOWRATE: 2.5 GPM @ 1 PSI
TEMP SETTING: 80-100 DEG F
UL C/US LISTED
HOTSTART NUMBER: CTM15108-N01

DIMENSIONS: mm [INCHES]

Information contained in this publication may be considered confidential. Discretion is recommended when distributing.
Materials and specifications are subject to change without notice.
CAT, CATERPILLAR, their respective logos, OLYMPIAN, "Caterpillar Yellow", the "Power Edge" trade dress as well as corporate and product identity used herein, are trademarks of Caterpillar and may not be used without permission.

www.OlympianPower.com
0J4988Y09 (06/15/15)
© 2015 Caterpillar
All rights reserved.
Printed in U.S.A.

OLYMPIAN™

EMERGENCY STOP BREAK GLASS, SURFACE MOUNT

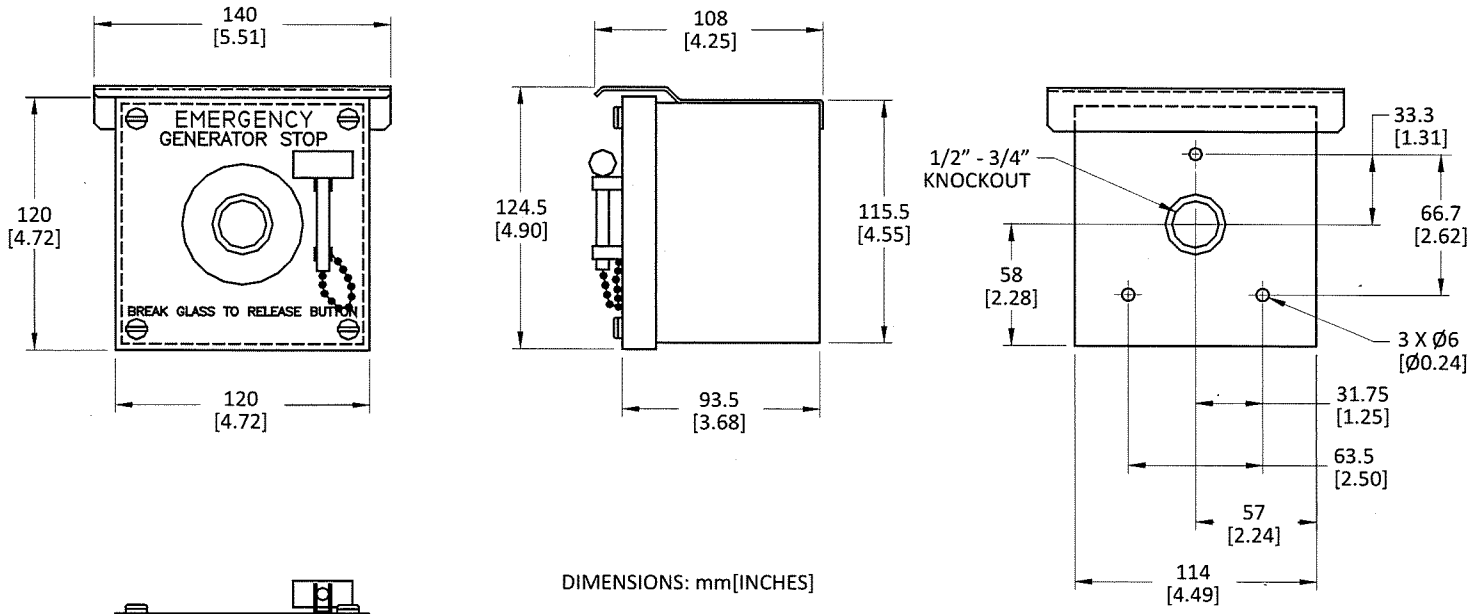

DIMENSIONS: mm[INCHES]

MANUFACTURER:

PILLA ELECTRICAL PRODUCTS, INC
4076 ST. AUGUSTINE ROAD
JACKSONVILLE, FL 32207-6661
TEL (904) 396-7371 FAX (904) 396-1391

SPECIFICATIONS:

MODEL- ST120SN3RSL
SURFACE MOUNT, NEMA 3R
2 REPLACEMENT GLASSES
PAINTED STEEL ENCLOSURE

Circuit Breakers
40-630 Amp

C.B. Amps	Lug Part # C.B.	Lug Description	Wire Size per 310-16*	Frame
40	OF8451	Single Hole 0.656 Dia. #6 to 300 MCM Copper or Aluminum Single Conductor Only Mounting Bolt 70 in lbs. Wire Lug is 375 in lbs.	#8	200 Amp Frame
45	OF8451		#8	
50	OF8451		#8	
55	OF8451		#6	
60	OF8451		#6	
70	OF8451		#4	
75	OF8451		#4	
80	OF8451		#4	
90	OF8451		#3	
100	OF8451		#3	
125	OF8451		#1	
150	OF8451		1/0	
160	OF8451		2/0	
175	OF8451		2/0	
180	OF8451		3/0	
200	OF8451		3/0	
225	OA7822	1-600 MCM #4 or 2-250 MCM to 2-1/0 Mounting 70 in lbs. Wire Lug is 375 in lb.	4/0	400 Amp Frame
250	OA7822		250 MCM	
300	OA7822		350 MCM	
350	OA7822		500 MCM	
400	OA7822		600 MCM	
450	OF8452	2-500 MCM-750 MCM Al/Cu 480 in lbs. 3-2/0-400 MCM Al/Cu 480 in lbs.	700 MCM or 2-4/0	800 Amp Frame
500	OF8452		2-250 MCM	
600	OF9721		2-350 MCM or 3-3/0	
630	OF9721		2-400 MCM	

Rated Current..... 40-200 Amps
Interrupt Rating..... 18,000 Amps
Trip..... Thermal Magnetic
Curve..... #200
Rating Temperature ..... 40°C
Frame Size ..... 200 Amp

Rated Current..... 225-400 Amps
Interrupt Rating..... 25,000 Amps
Trip..... Thermal Magnetic
Curve..... #200
Rating Temperature ..... 40°C
Frame Size ..... 400 Amp

Rated Current..... 450-630 Amps
Interrupt Rating..... 35,000 Amps
Trip..... Thermal Magnetic
Curve..... #200
Rating Temperature ..... 40°C
Frame Size ..... 800 Amp

Derate by Temperature

Temperature °C	Rated Current
20	110
30	105
40	100
50	95

* Section 240.4 of the 2005 NEC allows the next higher standard overcurrent device rating above the ampacity of the conductors being protected provided the next higher rating does not exceed 800 amperes. Because of derates and individual AHJ preferences, that was not taken into account in the above chart.

All circuit breakers are UL 489 Listed for 208, 240, 480 Volts Trip Curve on back side.

OLYMPIAN™

2 Amp and 10 Amp Battery Chargers

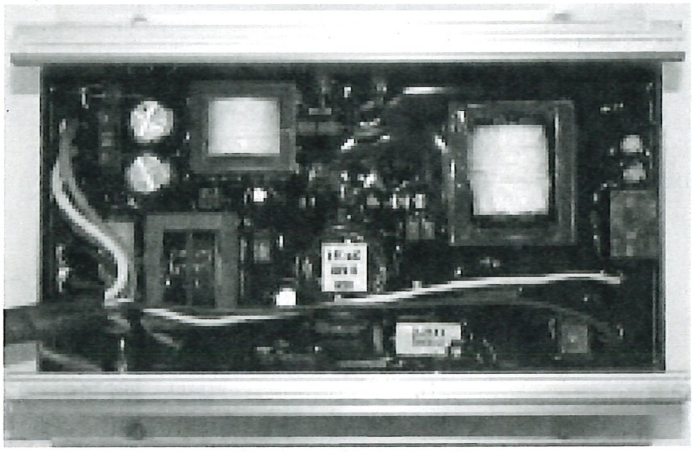

Battery Charger shown from inside of Control Panel Enclosure. Connections are made via an attached harness.

Specifications	2 Amp	10 Amp
Nominal Input	120 VAC	120 VAC
Operating AC Line Voltage Range	108 to 132 Volts AC	108 to 132 Volts AC
Input AC Line Frequency	50/60 Hz	50/60 Hz
Battery Fuse	5 Amps	15 Amps
Nominal Charge Rate	2 Amps	10 Amps
Equalize Voltage		13.8 Volts
Float Voltage	13.8/27.6	13.0/26.0
Current @ Equalize to Float Transition		5 Amps
Battery Under-voltage shutdown	11/22 Volts	11/22 Volts
LED Indicators		
AC Line Voltage	Green LED On	Green LED On
Battery Connected and Charging	Yellow LED On 1 > 0.5 Amp	Yellow LED On 1 > 2 Amp
Battery Current Drain	30 milliamp	30 milliamp
AC Line Connection	Terminal Block	Terminal Block
Battery Connection	Internal to Control Panel	Internal to Control Panel
Control Connection		AC Power Fail Relay Form C 2 Amp Rating
UL Listed	Yes	Yes
NFPA110 Compliant	No	Yes

The Olympian 2 & 10 Amp 12 and 24 Volt charger is designed to work with the H control panel is mounted within the H100 Enclosure. It provides the ultimate in automatic battery voltage maintenance.

The 2 amp is self regulating and produces instantaneous output current adjustments to keep the battery charged to an optimum level. Battery voltage is read on the H100 control panel readout The 10 amp has automatic float and equalizer control. It precisely monitors the battery's voltage and automatically activates the correct charging mode.

The charge rate is limited and controlled to efficiently and safely maintain ideal battery levels under varying conditions.

The equalizer system uses a control circuit to limit charging current to 10 amps. When battery voltage drops beyond a pre-set level, charging current increases to 5 amps and then to the 10 amp charge rate if needed. When the battery reaches maximum charge the charger switches to equalize mode. At equalize, just enough current is supplied to maintain the battery at or above 13/26 volts. Battery voltage and Charging current are read at the digital display on the H100 panel.

OLYMPIAN™

Information contained in this publication may be considered confidential.
Discretion is recommended when distributing.
Materials and specifications are subject to change without notice.
CAT, CATERPILLAR, OLYMPIAN, their respective logos and "Caterpillar Yellow", as well as corporate and product identity used herein, are trademarks of Caterpillar and may not be used without permission.

www.CAT-ElectricPower.com

© 2009 Caterpillar
All rights reserved.
Printed in U.S.A.

OLYMPIAN™

Submittal Data

Engine Options

Industrial Genset Battery Warmer Pad

Battery warmer pads are designed to keep batteries warm and ensure maximum engine cranking speed in cold climate installations. Warming pads are thermostatically controlled, UL listed and factory-wired. 120VAC is supplied to the warming pad junction box via power cord plugged into a GFCI receptacle or hard-wired to a circuit breaker in a genset-mounted load panel (if so equipped).

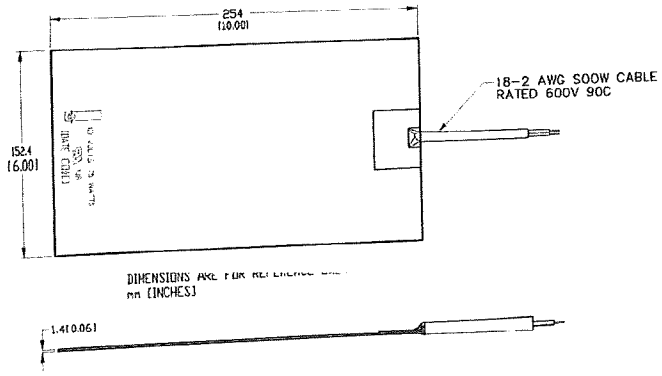

SPECIFICATIONS:

POWER: 75W @ 120VAC
HEATING ELEMENT TYPE: WIRE-WOUND
PAD MATERIAL: SILICONE RUBBER/FIBERGLASS
THERMOSTATIC CONTROL:
OPEN: 40°F, CLOSE: 20°F
FACTORY INSTALLED AND WIRED
UL LISTED

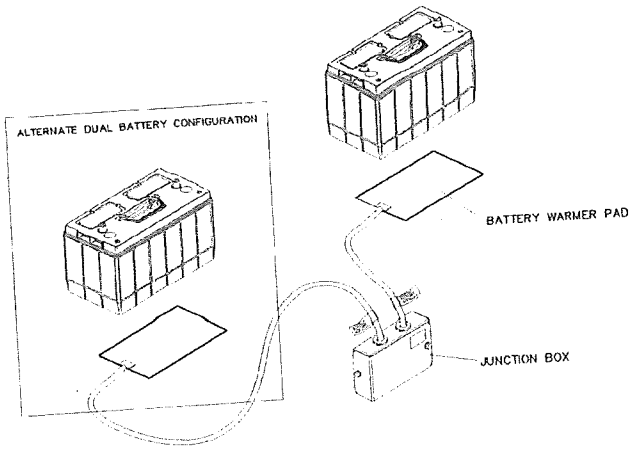

TYPICAL 12V SYSTEM

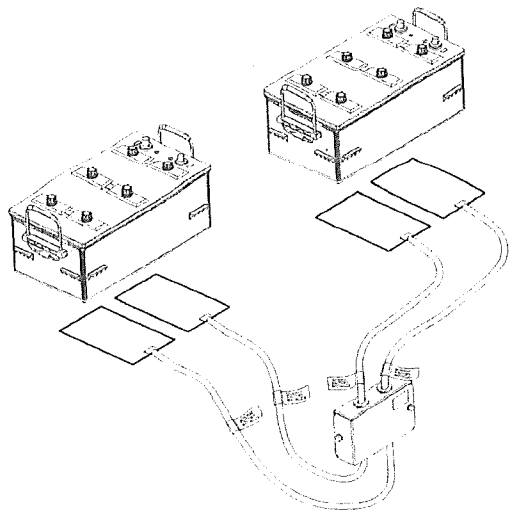

TYPICAL 24V SYSTEM

Information contained in this publication may be considered confidential. Discretion is recommended when distributing.
Materials and specifications are subject to change without notice.
CAT, CATERPILLAR, their respective logos, OLYMPIAN, "Caterpillar Yellow", the "Power Edge" trade dress as well as corporate and product identity used herein, are trademarks of Caterpillar and may not be used without permission.

www.OlympianPower.com
019762Y09 (09/14/13)
© 2013 Caterpillar
All rights reserved.
Printed in U.S.A.

OLYMPIAN™

ALTERNATOR STRIP HEATER

- **Relay Control**
- **2 Heaters per Stator**
- **150 Watt**
- **120V 120VAC Operation**

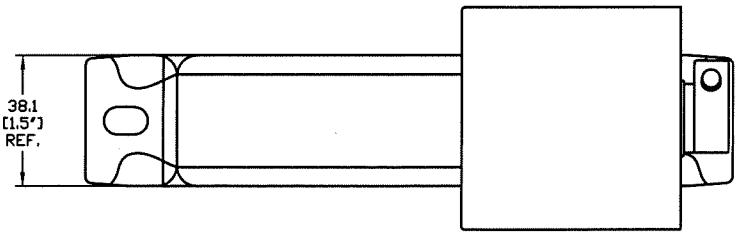

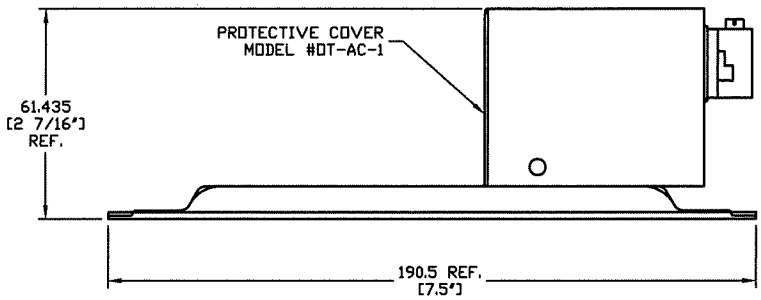

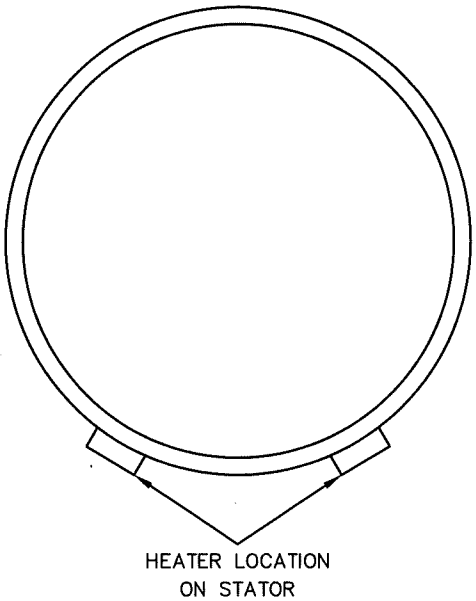

WIRING DIAGRAM
DRAWING NO. 73831

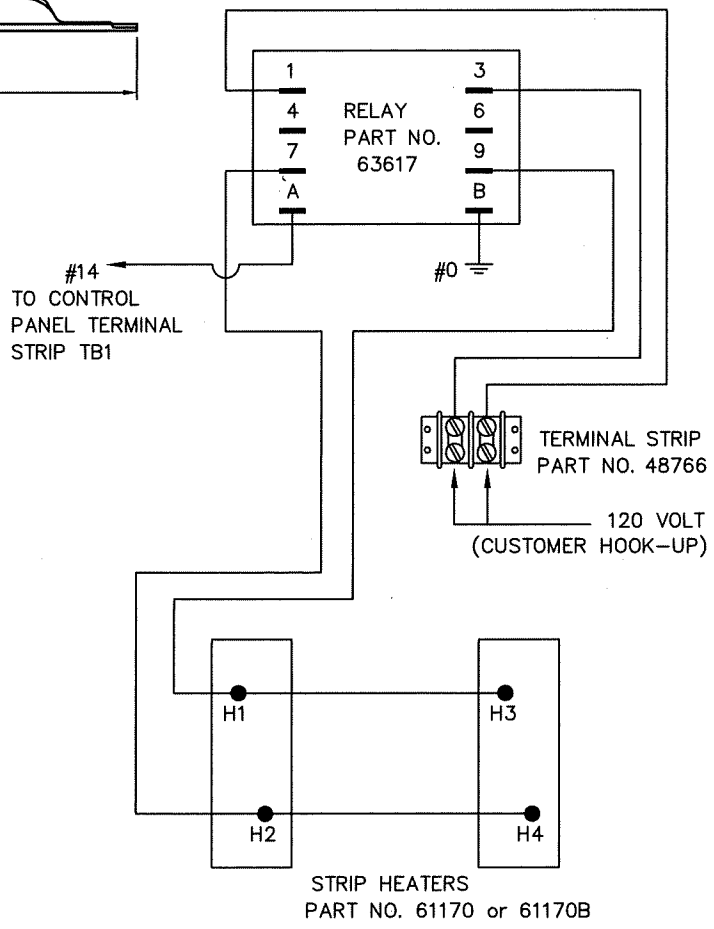

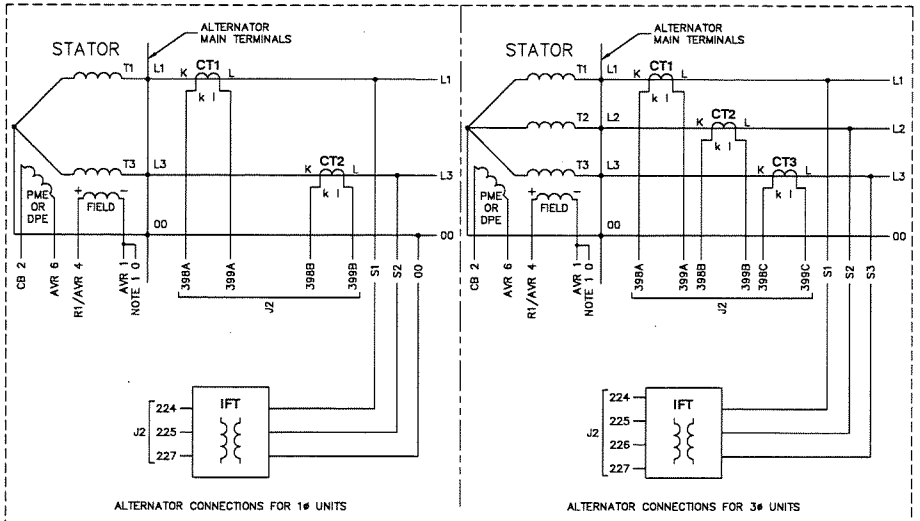

ALTERNATOR CONNECTIONS FOR 1ø UNITS

ALTERNATOR CONNECTIONS FOR 3ø UNITS

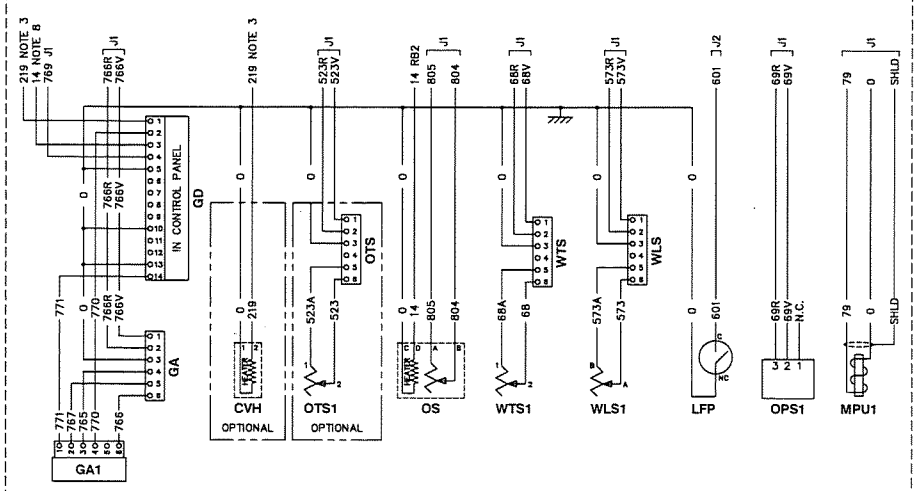

PAGE 1 OF 4

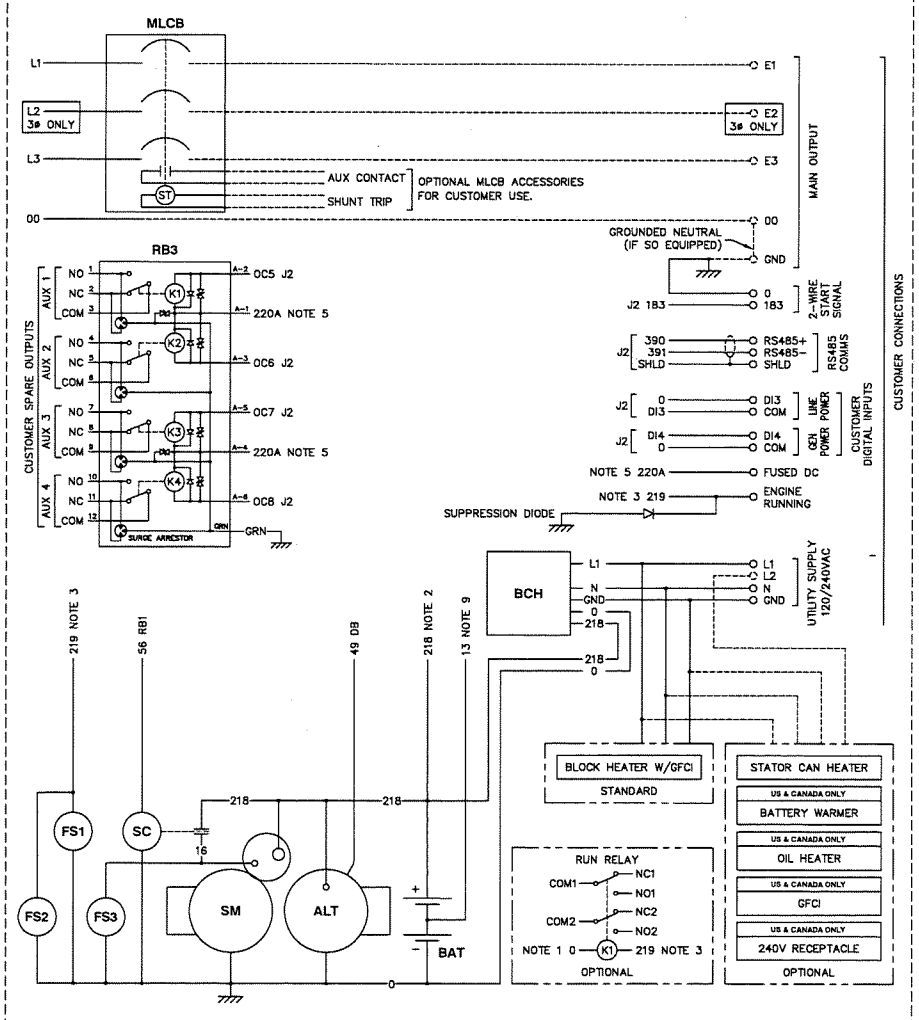

PAGE 2 OF 4

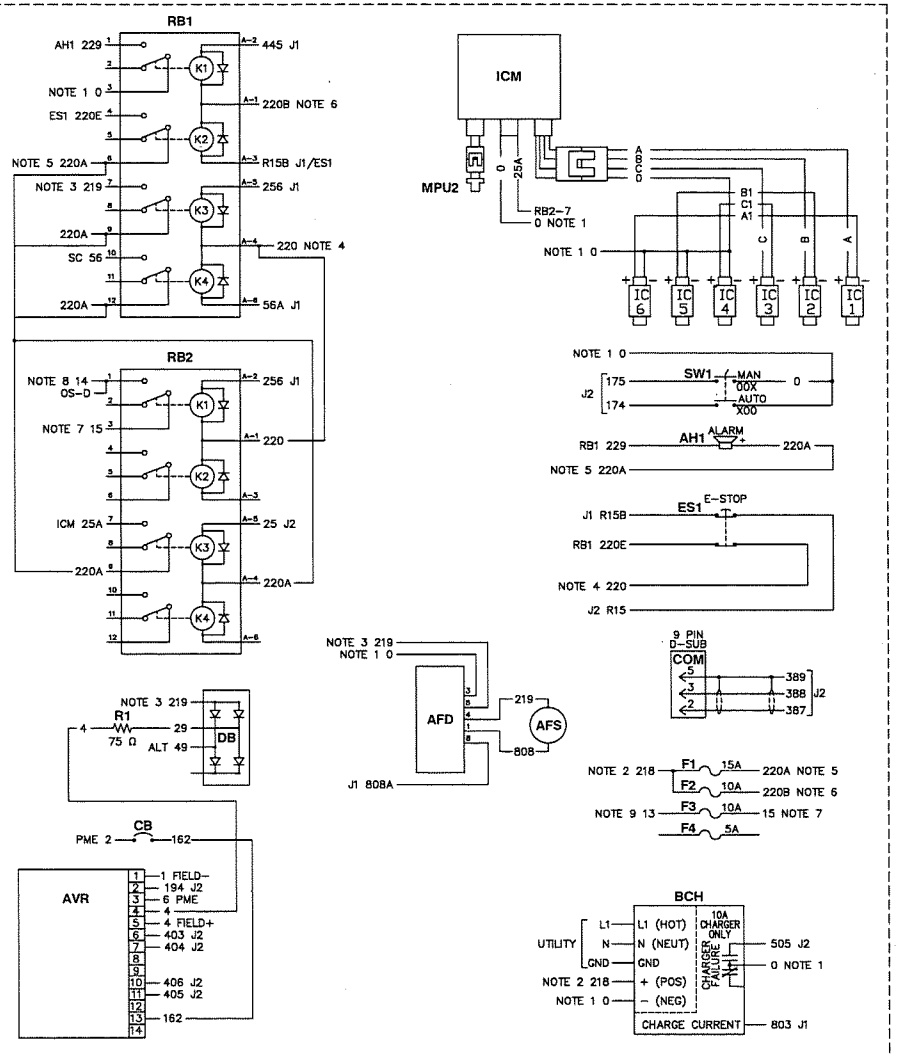

SCHEMATIC - DIAGRAM
G14.2L G20 H-PANEL
DRAWING #: 0K9945

AVR CONNECTOR

PIN	WIRE	TO	FUNCTION
1	1	FIELD	- FIELD
2	194	J2-31	+12VDC
3	6	PME	PME OUTPUT
4	4	R1	+ FIELD
5	4	FIELD	+ FIELD
6	403	J2-8	GATE TRIGGER B
7	404	J2-20	GATE TRIGGER A
10	406	J2-30	ZERO CROSSING INPUT
11	405	J2-19	GROUND (ISO)
13	162	CB	PME OUTPUT (AFTER CB)

GD CONNECTOR

PIN	WIRE	TO	FUNCTION
1	219	RB1-7	NOTE 3
2	770	GA1-4	THROTTLE DRIVE HI
3	14	RB2-1	NOTE 8
4	769	J1-33	THROTTLE PWM
5	0	GND	NOTE 1
10	0	GND	NOTE 1
13	0	GND	NOTE 1
14	771	GA1-1	THROTTLE DRIVE LO

ENGINE CONTROL MODULE CONNECTIONS

J1

PIN	WIRE	TO	FUNCTION
3	810	MOD-2	MODEM SIGNAL RETURN
4	805	O2-A	OXYGEN SENSOR RETURN (OPTION)
5	804	O2-B	OXYGEN SENSOR + (OPTION)
8	523R	OTS-2	OIL TEMPERATURE RETURN
9	523V	OTS-1	OIL TEMPERATURE +
10	R15B	RB1A-3/ES1	OVERSPEED/WATCHDOG
11	256	RB1A-5	FUEL RELAY
12	0	GND	NOTE 1
14	811	MOD-3	MODEM DATA CARRIER DETECT
15	68V	WTS-1	COOLANT TEMPERATURE +
16	803	BCH	BATTERY CHARGER CURRENT
17	766R	GA-2	THROTTLE POSITIVE RETURN
18	766V	GA-1	THROTTLE POSITIVE +
19	69R	OPS1-3	OIL PRESSURE RETURN
20	69V	OPS1-2	OIL PRESSURE +
21	808A	AFD-8	AIR/FUEL SOLENOID DRIVER
23	56A	RB1A-6	STARTER RELAY
24	0	MPU1-2	MPU1 SIGNAL (-)
25	79	MPU1-3	MPU1 SIGNAL (+)
26	812	MOD-4	MODEM ENABLE
29	573R	WLS-2	COOLANT LEVEL RETURN
30	573V	WLS-1	COOLANT LEVEL +
31	68R	WTS-2	COOLANT TEMPERATURE RETURN
32	809	MOD-1	MODEM 12V POWER
33	769	GD-4	THROTTLE PWM
34	445	RB1A-2	ALARM RELAY
35	220B	F2	NOTE 6

J2

PIN	WIRE	TO	FUNCTION
1	391	CUST CON	RS485- (XFER SW)
2	388	COM-3	RS232 TX (GENLINK)
3	DI3	CUST CON	LINE POWER
4	183	CUST CON	REMOTE START
5	174	SW1	"AUTO" START
6	224	IFT-5	V SENSE GEN A PH
7	227	IFT-8	V SENSE RTN
8	403	AVR-6	AVR GATE TRIGGER B
* 9	399C	CT3-1	GEN C PH CURRENT -
* 10	398C	CT3-2	GEN C PH CURRENT +
11	399A	CT1-1	GEN A PH CURRENT -
12	398A	CT1-2	GEN A PH CURRENT +
13	390	CUST CON	RS485+ (XFER SW)
14	387	COM-2	RS232 RX (GENLINK)
15	601	LFP	LOW FUEL PRESSURE
16	R15	ES1	EMERGENCY STOP
* 17	226	IFT-7	V SENSE GEN C PH
19	405	AVR-11	AVR GROUND
20	404	AVR-7	AVR GATE TRIGGER A
21	OC8	RB3A-6	AUX 4 OUTPUT
22	OC6	RB3A-3	AUX 2 OUTPUT
23	OC5	RB3A-2	AUX 1 OUTPUT
24	SHLD	CUST CON	RS485 DRAIN (XFER SW)
25	389	COM-5	RS232 COM (GENLINK)
26	DI4	CUST CON	GENERATOR POWER
27	505	BCH	BATTERY CHARGER FAIL
28	175	SW1	"MANUAL" START
29	225	IFT-6	V SENSE GEN B PH
30	406	AVR-10	AVR ZERO CROSSING I/P
31	194	AVR-2	AVR +12VDC
32	25	RB2A-5	INGNITION POWER
33	OC7	RB3A-5	AUX 3 OUTPUT
34	399B	CT2-1	GEN B PH CURRENT-
35	398B	CT2-2	GEN B PH CURRENT+

* - CONNECTIONS NOT USED IN 1Ø UNITS.

NOTES:

1) WIRE# 0 IS CHASSIS GROUND (BATTERY-) UNLESS NOTED OTHERWISE.
2) WIRE# 218 IS UNFUSED +24VDC (BATTERY+).
3) WIRE# 219 IS FUSED +24VDC WHEN GENERATOR IS CRANKING OR RUNNING.
4) WIRE# 220 IS FUSED +24VDC WHEN E-STOP IS NOT ACTIVATED.
5) WIRE# 220A IS FUSED +24VDC FOR GENERAL USE.
6) WIRE# 220B IS FUSED +24VDC FOR THE ENGINE CONTROL MODULE.
7) WIRE# 15 IS FUSED +12VDC FOR THE IGNITION.
8) WIRE# 14 IS FUSED +12VDC WHEN ENGINE IS RUNNING.
9) WIRE# 13 IS UNFUSED +12VDC (BATTERY +) FOR. O2 SENSOR HEATER POWER. THIS WIRE IS CONNECTED TO THE CENTER JUMPER BETWEEN THE TWO ENGINE STARTING BATTERIES.

LEGEND

AFD - AIR/FUEL DRIVER	CVH - CRANKCASE VENT HEATER	ICM - IGNITION CONTROL MODULE	R1 - RESISTOR
AFS - AIR/FUEL SOLENOID	DB - DIODE BRIDGE	IFT - INTERFACE TRANSFORMER	RB_ - RELAY BOARD
AH1 - ALARM HORN	DPE - EXCITER	J_ - ENGINE CONTROL MODULE CONN.	SC - STARTER CONTACTOR
ALT - DC CHARGE ALTERNATOR	ES1 - EMERGENCY STOP SWITCH	LFP - LOW FUEL PRESSURE	SM - STARTER MOTOR
AVR - AUTOMATIC VOLTAGE REGULATOR	F_ - FUSE	MLCB - MAIN LINE CIRCUIT BREAKER	SW1 - OFF/AUTO/MANUAL SWITCH
BAT - BATTERY	FS_ - FUEL SOLENOID	MPU_- MAGNETIC PICKUP	WLS_- WATER LEVEL SENSOR
BCH - BATTERY CHARGER	GA_ - GOVERNOR ACTUATOR	OPS1 - OIL PRESSURE SENDER	WTS_- WATER TEMPERATURE SENDER
CB - CIRCUIT BREAKER	GD - GOVERNOR DRIVER	OS - OXYGEN SENDER	
COM - COMMUNICATION CONNECTOR	GFCI - GROUND FAULT CIRCUIT INTERRUPT	OTS_- OIL TEMPERATURE SENDER	
CT_ - CURRENT TRANSFORMER	IC_ - IGNITION COIL	PME - PERMANENT MAGNET EXCITER	

SCHEMATIC - DIAGRAM
G14.2L G20 H-PANEL
DRAWING #: 0K9945

Olympian™

H PANEL GENSET CONTROL INTERCONNECTIONS

NOTES:

1) SPARE OUTPUTS ARE STANDARD ON INDUSTRIAL PRODUCT ONLY. GENLINK REQUIRED FOR PROGRAMMING.
2) 240V RECEPTACLE STANDARD ON GENSETS WITH 240VAC COOLANT HEATERS ONLY.
3) REFER TO H PANEL MANUAL FOR INSTRUCTIONS ON ENABLING HTS TRANSFER SWITCH. REFER TO HTS TRANSFER SWITCH MANUAL FOR DIP SWITCH SETTINGS FOR MULTIPLE HTS APPLICATIONS.
4) CONNECT THE RS485 OVERALL SHIELD AT GENSET CONNECTION TERMINAL ONLY.

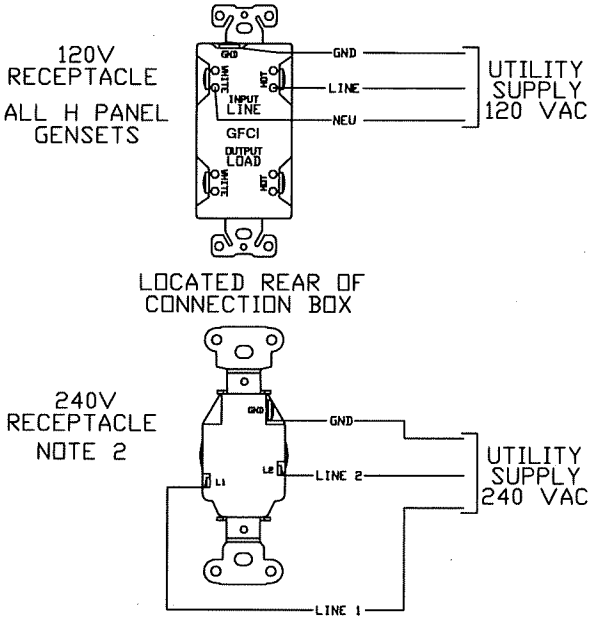

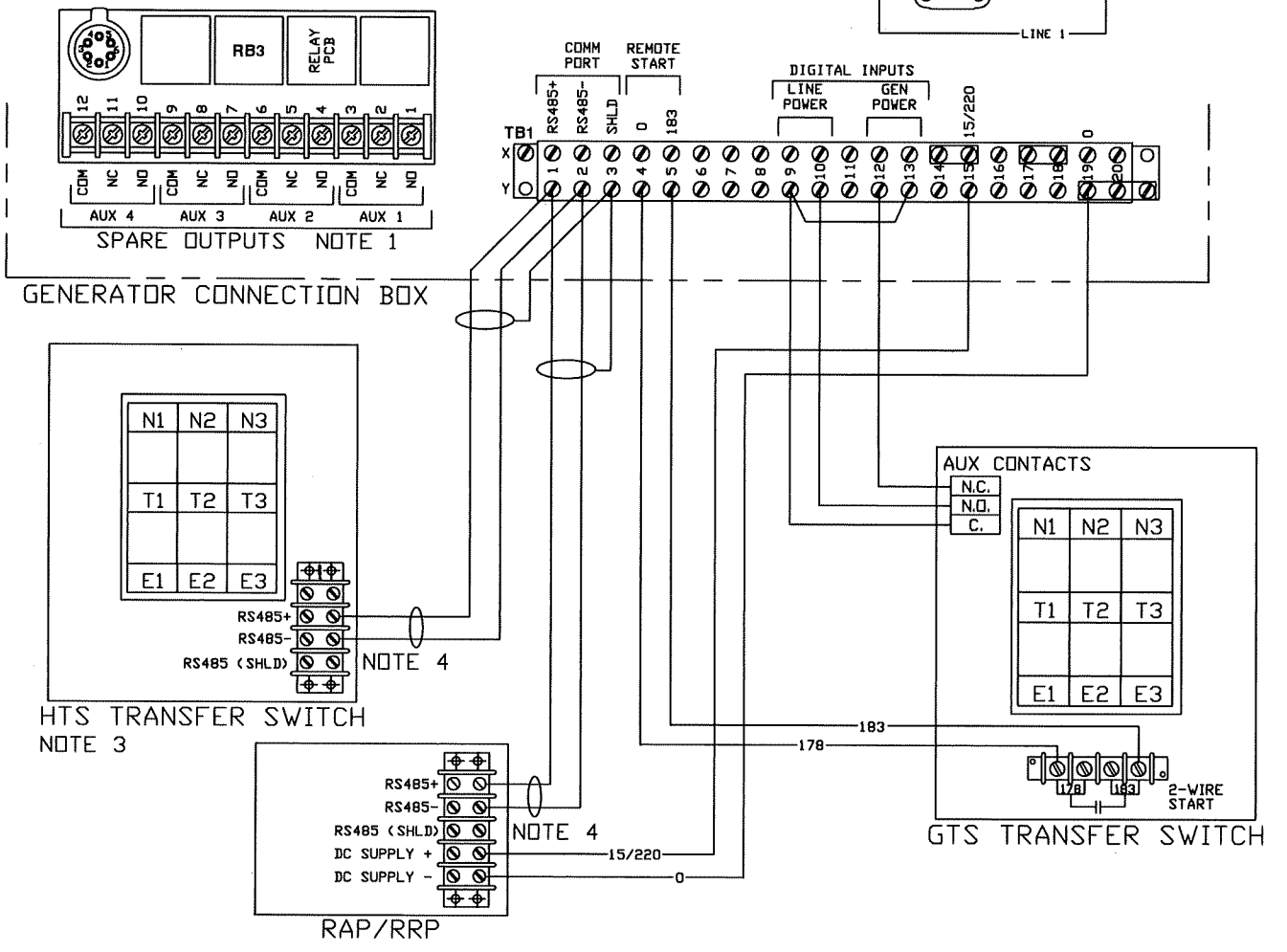

LEGEND

AFD	– AIR/FUEL DRIVER	ICM	– IGNITION CONTROL MODULE
AFS	– AIR/FUEL SOLENOID	IFT	– INTERFACE TRANSFORMER
AH1	– ALARM HORN	J_	– ENGINE CONTROL MODULE CONN.
ALT	– DC CHARGE ALTERNATOR	LFP	– LOW FUEL PRESSURE SWITCH
AVR	– AUTOMATIC VOLTAGE REGULATOR	MLCB	– MAIN LINE CIRCUIT BREAKER
BCC	– BATTERY CHARGER CONNECTOR	MOD	– MODEM CONNECTOR
BCH	– BATTERY CHARGER	MPU_	– MAGNETIC PICKUP
CB	– CIRCUIT BREAKER DPE	NB	– NEUTRAL BLOCK
CO	– CROSSOVER CONNECTOR	OPS1	– OIL PRESSURE SENDER
COM	– COMMUNICATIONS PORT	OS	– OXYGEN SENSOR
CT_	– CURRENT TRANSFORMER	OTC	– OIL TEMPERATURE CONNECTOR
CVH	– CRANKCASE VENT HEATER	OTS_	– OIL TEMPERATURE SENDER
DB	– DIODE BRIDGE	R1	– RESISTOR
ES1	– EMERGENCY STOP SWITCH	RB_	– RELAY BOARD
EXC	– EXCITER	RB_A	– RELAY BOARD CONNECTOR
F_	– FUSE	SC	– START CONTACTOR
FS_	– FUEL SOLENOID	SM	– STARTER MOTOR
GA_	– GOVERNOR ACTUATOR	SW1	– OFF/AUTO/MANUAL SWITCH
GD	– GOVERNOR DRIVER	SWC	– OPERATOR SWITCH CONNECTOR
GFCI	– GROUND FAULT CURRENT INTERRUPT	TB_	– TERMINAL BLOCK
GND	– GROUND BAR CONNECTION	WLS_	– COOLANT LEVEL SENDER
IC_	– IGNITION CONTROL	WTS_	– COOLANT TEMPERATURE SENDER

NOTE: ALL WIRES 18 AWG 300V UL LISTED UNLESS SHOWN OTHERWISE

AWG SIZE

(12)

SPLICE NUMBER

3

WIRE SPLICE

COMPONENTS LOCATED IN ALTERNATOR CONNECTION BOX

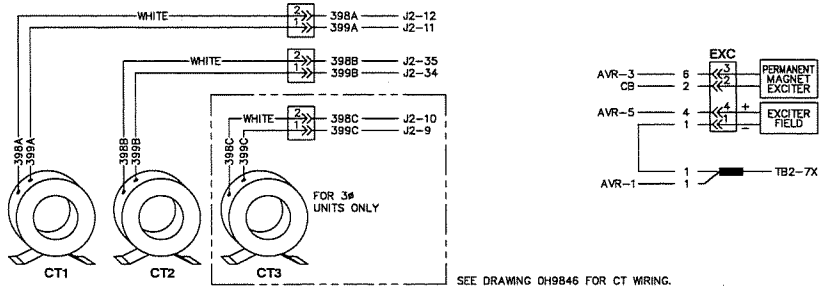

SEE DRAWING 0H9846 FOR CT WIRING.

COMPONENTS LOCATED IN HIGH VOLTAGE CUSTOMER CONNECTION MODULE

CONNECTIONS FOR 1Ø UNIT

NOTE: ALL WIRES IN THIS SECTION ARE 600V RATED

CONNECTIONS FOR 3Ø UNIT

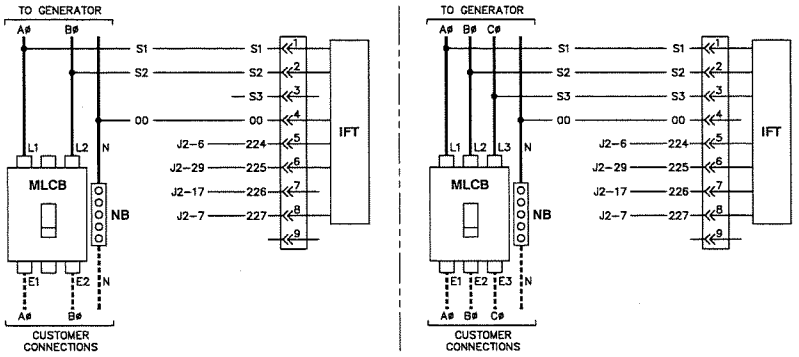

COMPONENTS LOCATED IN HIGH VOLTAGE CUSTOMER CONNECTION MODULE

NOTE: ALL WIRES ON THIS PAGE ARE 600V RATED

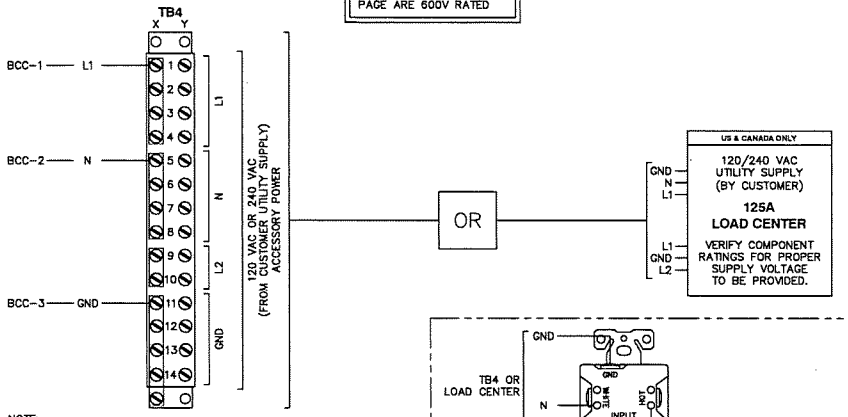

NOTE:
FOR FIELD WIRING TO CUSTOMER CONNECTIONS (TERMINAL STRIP)
MAXIMUM WIRE SIZE: #10 AWG
RECOMMENDED TIGHTENING TORQUE: 14 LB–IN

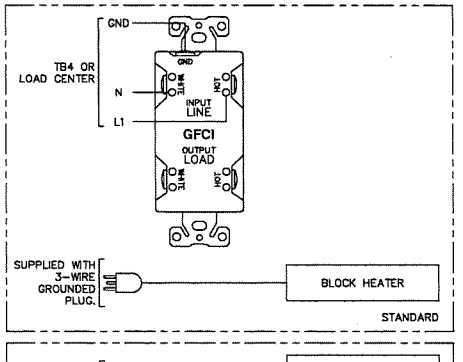

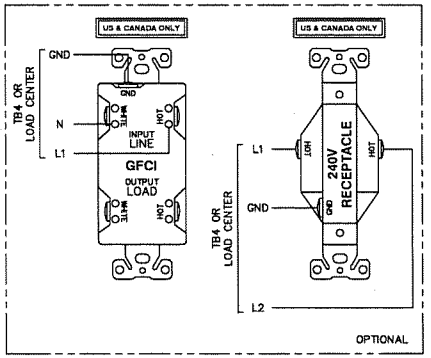

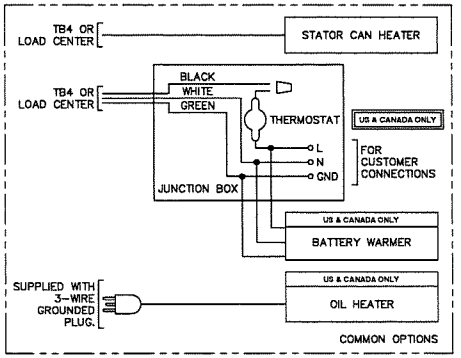

COMPONENTS LOCATED IN HIGH VOLTAGE CUSTOMER CONNECTION MODULE

NOTE: ALL WIRES ON THIS PAGE ARE 600V RATED

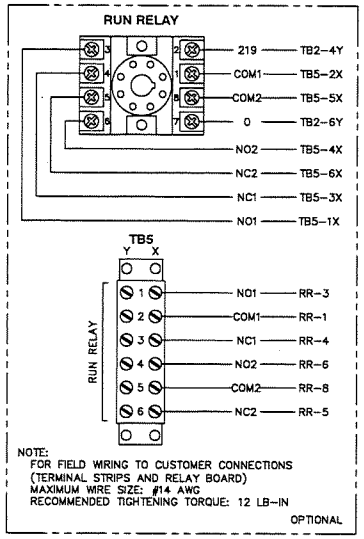

COMPONENTS LOCATED ON LOW VOLTAGE CUSTOMER CONNECTION PANEL

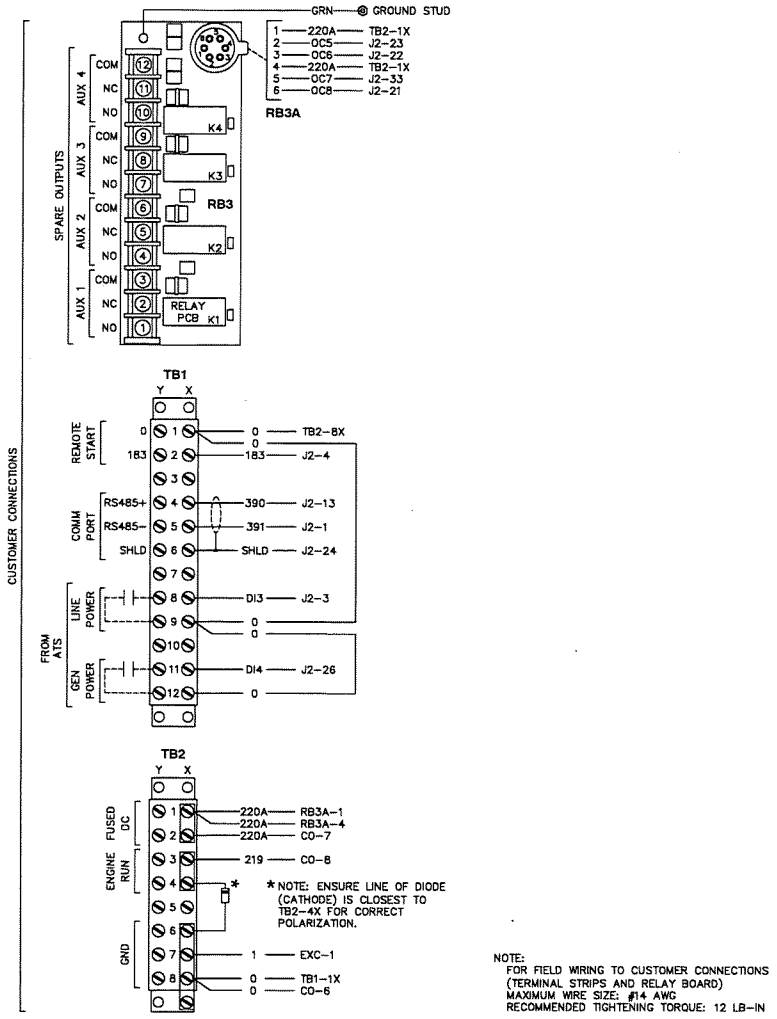

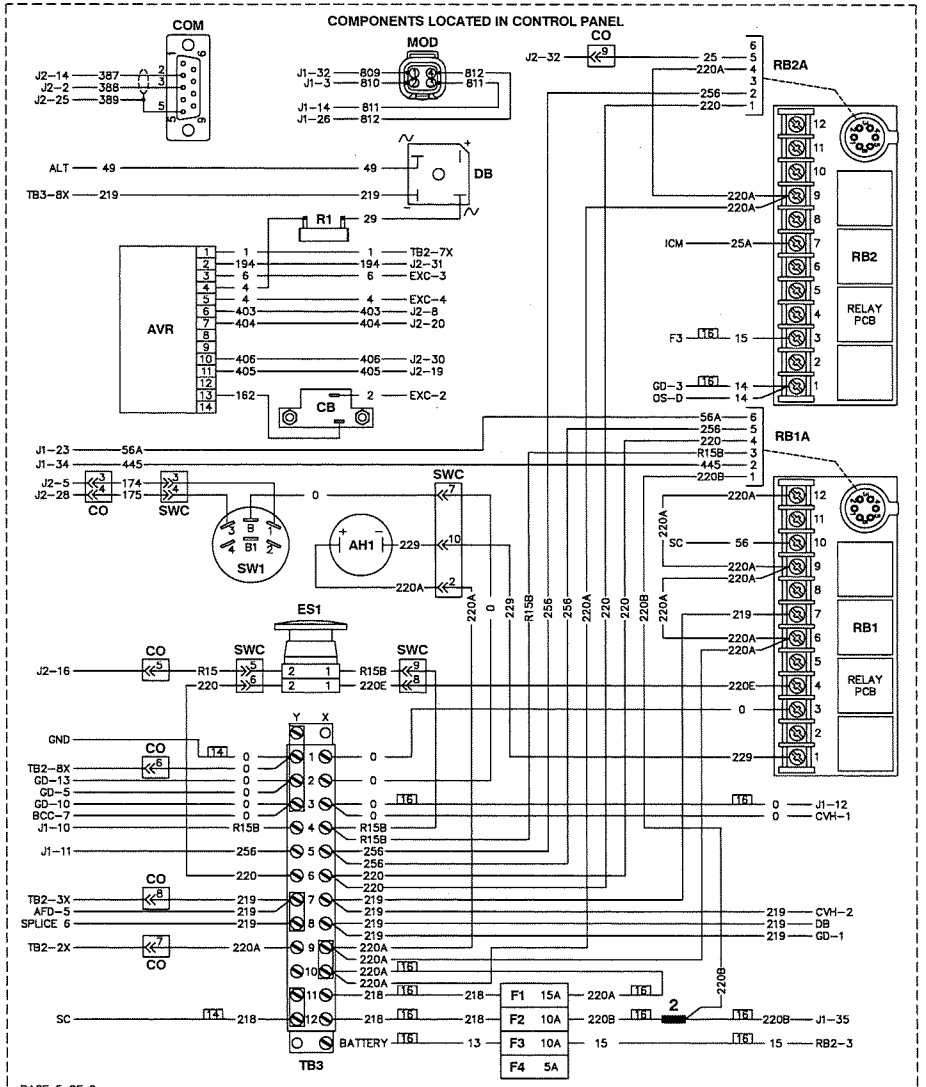

PAGE 5 OF 8

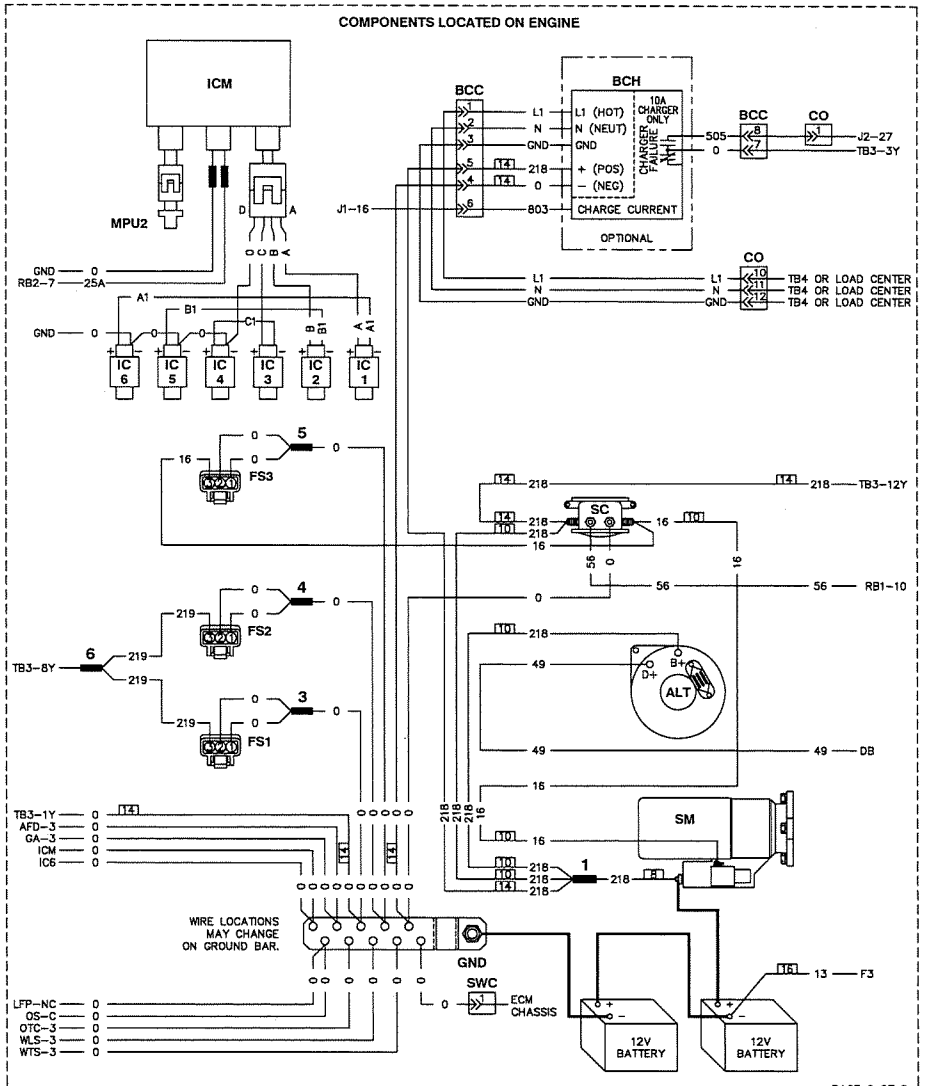

PAGE 6 OF 8

Appendix B – Malfunction Report

See latest revision of ENVIRONMENTAL-F-0242.

Malfunction Report

Facility Name: _____

Name: _____ Department: _____

Department Supervisor: _____

Describe the malfunction:

_____

When did the malfunction occur?

Date: _____ Time: _____

When was the malfunction fixed?

Date: _____ Time: _____

Affected system(s) (process equipment involved in the malfunction):

_____

What caused the malfunction?

_____

_____

What was done to correct the malfunction?

_____

_____

What will be done to prevent this malfunction from happening again?

_____

_____

Does the Operation and Maintenance Plan need to be revised? YES ☐ NO ☐

Appendix C – Observed BLDS Readings

ReportedDate	Group_Name	Name	Reading
4/29/2019 7:55	Broken Bag Detector	6100A Melt Broken Bag Detector	1.531
4/29/2019 7:56	Broken Bag Detector	6100A Melt Broken Bag Detector	1.663
4/29/2019 7:57	Broken Bag Detector	6100A Melt Broken Bag Detector	1.488
4/29/2019 7:58	Broken Bag Detector	6100A Melt Broken Bag Detector	1.799
4/29/2019 7:59	Broken Bag Detector	6100A Melt Broken Bag Detector	1.483
4/29/2019 8:00	Broken Bag Detector	6100A Melt Broken Bag Detector	1.539
4/29/2019 8:01	Broken Bag Detector	6100A Melt Broken Bag Detector	1.413
4/29/2019 8:02	Broken Bag Detector	6100A Melt Broken Bag Detector	1.436
4/29/2019 8:03	Broken Bag Detector	6100A Melt Broken Bag Detector	1.533
4/29/2019 8:04	Broken Bag Detector	6100A Melt Broken Bag Detector	1.363
4/29/2019 8:05	Broken Bag Detector	6100A Melt Broken Bag Detector	1.565
4/29/2019 8:06	Broken Bag Detector	6100A Melt Broken Bag Detector	1.667
4/29/2019 8:07	Broken Bag Detector	6100A Melt Broken Bag Detector	1.545
4/29/2019 8:08	Broken Bag Detector	6100A Melt Broken Bag Detector	1.584
4/29/2019 8:09	Broken Bag Detector	6100A Melt Broken Bag Detector	1.621
4/29/2019 8:10	Broken Bag Detector	6100A Melt Broken Bag Detector	1.291
4/29/2019 8:11	Broken Bag Detector	6100A Melt Broken Bag Detector	1.476
4/29/2019 8:12	Broken Bag Detector	6100A Melt Broken Bag Detector	1.457
4/29/2019 8:13	Broken Bag Detector	6100A Melt Broken Bag Detector	1.400
4/29/2019 8:14	Broken Bag Detector	6100A Melt Broken Bag Detector	1.582
4/29/2019 8:15	Broken Bag Detector	6100A Melt Broken Bag Detector	1.315
4/29/2019 8:16	Broken Bag Detector	6100A Melt Broken Bag Detector	1.561
4/29/2019 8:17	Broken Bag Detector	6100A Melt Broken Bag Detector	1.689
4/29/2019 8:18	Broken Bag Detector	6100A Melt Broken Bag Detector	1.491
4/29/2019 8:19	Broken Bag Detector	6100A Melt Broken Bag Detector	1.777
4/29/2019 8:20	Broken Bag Detector	6100A Melt Broken Bag Detector	1.613
4/29/2019 8:21	Broken Bag Detector	6100A Melt Broken Bag Detector	1.526
4/29/2019 8:22	Broken Bag Detector	6100A Melt Broken Bag Detector	1.496
4/29/2019 8:23	Broken Bag Detector	6100A Melt Broken Bag Detector	1.347
4/29/2019 8:24	Broken Bag Detector	6100A Melt Broken Bag Detector	1.544
4/29/2019 8:25	Broken Bag Detector	6100A Melt Broken Bag Detector	1.554
4/29/2019 8:26	Broken Bag Detector	6100A Melt Broken Bag Detector	1.486
4/29/2019 8:27	Broken Bag Detector	6100A Melt Broken Bag Detector	1.513
4/29/2019 8:28	Broken Bag Detector	6100A Melt Broken Bag Detector	1.733
4/29/2019 8:29	Broken Bag Detector	6100A Melt Broken Bag Detector	1.419
4/29/2019 8:30	Broken Bag Detector	6100A Melt Broken Bag Detector	1.476
4/29/2019 8:31	Broken Bag Detector	6100A Melt Broken Bag Detector	1.612
4/29/2019 8:32	Broken Bag Detector	6100A Melt Broken Bag Detector	1.376
4/29/2019 8:33	Broken Bag Detector	6100A Melt Broken Bag Detector	1.508
4/29/2019 8:34	Broken Bag Detector	6100A Melt Broken Bag Detector	1.614
4/29/2019 8:35	Broken Bag Detector	6100A Melt Broken Bag Detector	1.341
4/29/2019 8:36	Broken Bag Detector	6100A Melt Broken Bag Detector	1.429
4/29/2019 8:37	Broken Bag Detector	6100A Melt Broken Bag Detector	1.249
4/29/2019 8:38	Broken Bag Detector	6100A Melt Broken Bag Detector	1.453
4/29/2019 8:39	Broken Bag Detector	6100A Melt Broken Bag Detector	1.505
4/29/2019 8:40	Broken Bag Detector	6100A Melt Broken Bag Detector	1.797
4/29/2019 8:41	Broken Bag Detector	6100A Melt Broken Bag Detector	1.407
4/29/2019 8:42	Broken Bag Detector	6100A Melt Broken Bag Detector	1.577
4/29/2019 8:43	Broken Bag Detector	6100A Melt Broken Bag Detector	1.608
4/29/2019 8:44	Broken Bag Detector	6100A Melt Broken Bag Detector	1.631
4/29/2019 8:45	Broken Bag Detector	6100A Melt Broken Bag Detector	1.513
4/29/2019 8:46	Broken Bag Detector	6100A Melt Broken Bag Detector	1.482
4/29/2019 8:47	Broken Bag Detector	6100A Melt Broken Bag Detector	1.633
4/29/2019 8:48	Broken Bag Detector	6100A Melt Broken Bag Detector	1.449

1.856	**Max**
1.124	**Min**
1.514	**Average**

4/29/2019 8:49	Broken Bag Detector	6100A Melt Broken Bag Detector	1.463
4/29/2019 8:50	Broken Bag Detector	6100A Melt Broken Bag Detector	1.722
4/29/2019 8:51	Broken Bag Detector	6100A Melt Broken Bag Detector	1.465
4/29/2019 8:52	Broken Bag Detector	6100A Melt Broken Bag Detector	1.466
4/29/2019 8:53	Broken Bag Detector	6100A Melt Broken Bag Detector	1.350
4/29/2019 8:54	Broken Bag Detector	6100A Melt Broken Bag Detector	1.377
4/29/2019 8:55	Broken Bag Detector	6100A Melt Broken Bag Detector	1.465
4/29/2019 8:56	Broken Bag Detector	6100A Melt Broken Bag Detector	1.641
4/29/2019 8:57	Broken Bag Detector	6100A Melt Broken Bag Detector	1.597
4/29/2019 8:58	Broken Bag Detector	6100A Melt Broken Bag Detector	1.382
4/29/2019 8:59	Broken Bag Detector	6100A Melt Broken Bag Detector	1.543
4/29/2019 9:00	Broken Bag Detector	6100A Melt Broken Bag Detector	1.312
4/29/2019 9:01	Broken Bag Detector	6100A Melt Broken Bag Detector	1.430
4/29/2019 9:02	Broken Bag Detector	6100A Melt Broken Bag Detector	1.856
4/29/2019 9:03	Broken Bag Detector	6100A Melt Broken Bag Detector	1.479
4/29/2019 9:04	Broken Bag Detector	6100A Melt Broken Bag Detector	1.495
4/29/2019 9:05	Broken Bag Detector	6100A Melt Broken Bag Detector	1.385
4/29/2019 9:06	Broken Bag Detector	6100A Melt Broken Bag Detector	1.616
4/29/2019 9:07	Broken Bag Detector	6100A Melt Broken Bag Detector	1.512
4/29/2019 10:15	Broken Bag Detector	6100A Melt Broken Bag Detector	1.463
4/29/2019 10:16	Broken Bag Detector	6100A Melt Broken Bag Detector	1.554
4/29/2019 10:17	Broken Bag Detector	6100A Melt Broken Bag Detector	1.124
4/29/2019 10:18	Broken Bag Detector	6100A Melt Broken Bag Detector	1.321
4/29/2019 10:19	Broken Bag Detector	6100A Melt Broken Bag Detector	1.382
4/29/2019 10:20	Broken Bag Detector	6100A Melt Broken Bag Detector	1.448
4/29/2019 10:21	Broken Bag Detector	6100A Melt Broken Bag Detector	1.280
4/29/2019 10:22	Broken Bag Detector	6100A Melt Broken Bag Detector	1.477
4/29/2019 10:23	Broken Bag Detector	6100A Melt Broken Bag Detector	1.635
4/29/2019 10:24	Broken Bag Detector	6100A Melt Broken Bag Detector	1.580
4/29/2019 10:25	Broken Bag Detector	6100A Melt Broken Bag Detector	1.573
4/29/2019 10:26	Broken Bag Detector	6100A Melt Broken Bag Detector	1.520
4/29/2019 10:27	Broken Bag Detector	6100A Melt Broken Bag Detector	1.424
4/29/2019 10:28	Broken Bag Detector	6100A Melt Broken Bag Detector	1.533
4/29/2019 10:29	Broken Bag Detector	6100A Melt Broken Bag Detector	1.542
4/29/2019 10:30	Broken Bag Detector	6100A Melt Broken Bag Detector	1.267
4/29/2019 10:31	Broken Bag Detector	6100A Melt Broken Bag Detector	1.384
4/29/2019 10:32	Broken Bag Detector	6100A Melt Broken Bag Detector	1.565
4/29/2019 10:33	Broken Bag Detector	6100A Melt Broken Bag Detector	1.638
4/29/2019 10:34	Broken Bag Detector	6100A Melt Broken Bag Detector	1.607
4/29/2019 10:35	Broken Bag Detector	6100A Melt Broken Bag Detector	1.566
4/29/2019 10:36	Broken Bag Detector	6100A Melt Broken Bag Detector	1.698
4/29/2019 10:37	Broken Bag Detector	6100A Melt Broken Bag Detector	1.433
4/29/2019 10:38	Broken Bag Detector	6100A Melt Broken Bag Detector	1.405
4/29/2019 10:39	Broken Bag Detector	6100A Melt Broken Bag Detector	1.314
4/29/2019 10:40	Broken Bag Detector	6100A Melt Broken Bag Detector	1.382
4/29/2019 10:41	Broken Bag Detector	6100A Melt Broken Bag Detector	1.358
4/29/2019 10:42	Broken Bag Detector	6100A Melt Broken Bag Detector	1.518
4/29/2019 10:43	Broken Bag Detector	6100A Melt Broken Bag Detector	1.742
4/29/2019 10:44	Broken Bag Detector	6100A Melt Broken Bag Detector	1.463
4/29/2019 10:45	Broken Bag Detector	6100A Melt Broken Bag Detector	1.281
4/29/2019 10:46	Broken Bag Detector	6100A Melt Broken Bag Detector	1.475
4/29/2019 10:47	Broken Bag Detector	6100A Melt Broken Bag Detector	1.653
4/29/2019 10:48	Broken Bag Detector	6100A Melt Broken Bag Detector	1.536
4/29/2019 10:49	Broken Bag Detector	6100A Melt Broken Bag Detector	1.560
4/29/2019 10:50	Broken Bag Detector	6100A Melt Broken Bag Detector	1.740

4/29/2019 10:51	Broken Bag Detector	6100A Melt Broken Bag Detector	1.502
4/29/2019 10:52	Broken Bag Detector	6100A Melt Broken Bag Detector	1.506
4/29/2019 10:53	Broken Bag Detector	6100A Melt Broken Bag Detector	1.559
4/29/2019 10:54	Broken Bag Detector	6100A Melt Broken Bag Detector	1.557
4/29/2019 10:55	Broken Bag Detector	6100A Melt Broken Bag Detector	1.539
4/29/2019 10:56	Broken Bag Detector	6100A Melt Broken Bag Detector	1.547
4/29/2019 10:57	Broken Bag Detector	6100A Melt Broken Bag Detector	1.518
4/29/2019 10:58	Broken Bag Detector	6100A Melt Broken Bag Detector	1.634
4/29/2019 10:59	Broken Bag Detector	6100A Melt Broken Bag Detector	1.608
4/29/2019 11:00	Broken Bag Detector	6100A Melt Broken Bag Detector	1.684
4/29/2019 11:01	Broken Bag Detector	6100A Melt Broken Bag Detector	1.381
4/29/2019 11:02	Broken Bag Detector	6100A Melt Broken Bag Detector	1.488
4/29/2019 11:03	Broken Bag Detector	6100A Melt Broken Bag Detector	1.493
4/29/2019 11:04	Broken Bag Detector	6100A Melt Broken Bag Detector	1.680
4/29/2019 11:05	Broken Bag Detector	6100A Melt Broken Bag Detector	1.358
4/29/2019 11:06	Broken Bag Detector	6100A Melt Broken Bag Detector	1.745
4/29/2019 11:07	Broken Bag Detector	6100A Melt Broken Bag Detector	1.604
4/29/2019 11:08	Broken Bag Detector	6100A Melt Broken Bag Detector	1.770
4/29/2019 11:09	Broken Bag Detector	6100A Melt Broken Bag Detector	1.480
4/29/2019 11:10	Broken Bag Detector	6100A Melt Broken Bag Detector	1.374
4/29/2019 11:11	Broken Bag Detector	6100A Melt Broken Bag Detector	1.506
4/29/2019 11:12	Broken Bag Detector	6100A Melt Broken Bag Detector	1.578
4/29/2019 11:13	Broken Bag Detector	6100A Melt Broken Bag Detector	1.592
4/29/2019 11:14	Broken Bag Detector	6100A Melt Broken Bag Detector	1.559
4/29/2019 11:15	Broken Bag Detector	6100A Melt Broken Bag Detector	1.550
4/29/2019 11:16	Broken Bag Detector	6100A Melt Broken Bag Detector	1.548
4/29/2019 11:17	Broken Bag Detector	6100A Melt Broken Bag Detector	1.304
4/29/2019 11:18	Broken Bag Detector	6100A Melt Broken Bag Detector	1.444
4/29/2019 11:19	Broken Bag Detector	6100A Melt Broken Bag Detector	1.555
4/29/2019 12:20	Broken Bag Detector	6100A Melt Broken Bag Detector	1.765
4/29/2019 12:21	Broken Bag Detector	6100A Melt Broken Bag Detector	1.467
4/29/2019 12:22	Broken Bag Detector	6100A Melt Broken Bag Detector	1.535
4/29/2019 12:23	Broken Bag Detector	6100A Melt Broken Bag Detector	1.607
4/29/2019 12:24	Broken Bag Detector	6100A Melt Broken Bag Detector	1.521
4/29/2019 12:25	Broken Bag Detector	6100A Melt Broken Bag Detector	1.505
4/29/2019 12:26	Broken Bag Detector	6100A Melt Broken Bag Detector	1.553
4/29/2019 12:27	Broken Bag Detector	6100A Melt Broken Bag Detector	1.516
4/29/2019 12:28	Broken Bag Detector	6100A Melt Broken Bag Detector	1.575
4/29/2019 12:29	Broken Bag Detector	6100A Melt Broken Bag Detector	1.378
4/29/2019 12:30	Broken Bag Detector	6100A Melt Broken Bag Detector	1.396
4/29/2019 12:31	Broken Bag Detector	6100A Melt Broken Bag Detector	1.493
4/29/2019 12:32	Broken Bag Detector	6100A Melt Broken Bag Detector	1.341
4/29/2019 12:33	Broken Bag Detector	6100A Melt Broken Bag Detector	1.404
4/29/2019 12:34	Broken Bag Detector	6100A Melt Broken Bag Detector	1.562
4/29/2019 12:35	Broken Bag Detector	6100A Melt Broken Bag Detector	1.307
4/29/2019 12:36	Broken Bag Detector	6100A Melt Broken Bag Detector	1.699
4/29/2019 12:37	Broken Bag Detector	6100A Melt Broken Bag Detector	1.506
4/29/2019 12:38	Broken Bag Detector	6100A Melt Broken Bag Detector	1.433
4/29/2019 12:39	Broken Bag Detector	6100A Melt Broken Bag Detector	1.639
4/29/2019 12:40	Broken Bag Detector	6100A Melt Broken Bag Detector	1.715
4/29/2019 12:41	Broken Bag Detector	6100A Melt Broken Bag Detector	1.600
4/29/2019 12:42	Broken Bag Detector	6100A Melt Broken Bag Detector	1.342
4/29/2019 12:43	Broken Bag Detector	6100A Melt Broken Bag Detector	1.804
4/29/2019 12:44	Broken Bag Detector	6100A Melt Broken Bag Detector	1.462
4/29/2019 12:45	Broken Bag Detector	6100A Melt Broken Bag Detector	1.520

4/29/2019 12:46	Broken Bag Detector	6100A Melt Broken Bag Detector	1.535
4/29/2019 12:47	Broken Bag Detector	6100A Melt Broken Bag Detector	1.395
4/29/2019 12:48	Broken Bag Detector	6100A Melt Broken Bag Detector	1.368
4/29/2019 12:49	Broken Bag Detector	6100A Melt Broken Bag Detector	1.643
4/29/2019 12:50	Broken Bag Detector	6100A Melt Broken Bag Detector	1.581
4/29/2019 12:51	Broken Bag Detector	6100A Melt Broken Bag Detector	1.698
4/29/2019 12:52	Broken Bag Detector	6100A Melt Broken Bag Detector	1.503
4/29/2019 12:53	Broken Bag Detector	6100A Melt Broken Bag Detector	1.430
4/29/2019 12:54	Broken Bag Detector	6100A Melt Broken Bag Detector	1.418
4/29/2019 12:55	Broken Bag Detector	6100A Melt Broken Bag Detector	1.636
4/29/2019 12:56	Broken Bag Detector	6100A Melt Broken Bag Detector	1.398
4/29/2019 12:57	Broken Bag Detector	6100A Melt Broken Bag Detector	1.381
4/29/2019 12:58	Broken Bag Detector	6100A Melt Broken Bag Detector	1.455
4/29/2019 12:59	Broken Bag Detector	6100A Melt Broken Bag Detector	1.540
4/29/2019 13:00	Broken Bag Detector	6100A Melt Broken Bag Detector	1.486
4/29/2019 13:01	Broken Bag Detector	6100A Melt Broken Bag Detector	1.500
4/29/2019 13:02	Broken Bag Detector	6100A Melt Broken Bag Detector	1.602
4/29/2019 13:03	Broken Bag Detector	6100A Melt Broken Bag Detector	1.573
4/29/2019 13:04	Broken Bag Detector	6100A Melt Broken Bag Detector	1.479
4/29/2019 13:05	Broken Bag Detector	6100A Melt Broken Bag Detector	1.568
4/29/2019 13:06	Broken Bag Detector	6100A Melt Broken Bag Detector	1.743
4/29/2019 13:07	Broken Bag Detector	6100A Melt Broken Bag Detector	1.504
4/29/2019 13:08	Broken Bag Detector	6100A Melt Broken Bag Detector	1.518
4/29/2019 13:09	Broken Bag Detector	6100A Melt Broken Bag Detector	1.434
4/29/2019 13:10	Broken Bag Detector	6100A Melt Broken Bag Detector	1.539
4/29/2019 13:11	Broken Bag Detector	6100A Melt Broken Bag Detector	1.749
4/29/2019 13:12	Broken Bag Detector	6100A Melt Broken Bag Detector	1.567
4/29/2019 13:13	Broken Bag Detector	6100A Melt Broken Bag Detector	1.405
4/29/2019 13:14	Broken Bag Detector	6100A Melt Broken Bag Detector	1.436
4/29/2019 13:15	Broken Bag Detector	6100A Melt Broken Bag Detector	1.421
4/29/2019 13:16	Broken Bag Detector	6100A Melt Broken Bag Detector	1.530
4/29/2019 13:17	Broken Bag Detector	6100A Melt Broken Bag Detector	1.672
4/29/2019 13:18	Broken Bag Detector	6100A Melt Broken Bag Detector	1.353
4/29/2019 13:19	Broken Bag Detector	6100A Melt Broken Bag Detector	1.302
4/29/2019 13:20	Broken Bag Detector	6100A Melt Broken Bag Detector	1.613
4/29/2019 13:21	Broken Bag Detector	6100A Melt Broken Bag Detector	1.462
4/29/2019 13:22	Broken Bag Detector	6100A Melt Broken Bag Detector	1.508
4/29/2019 13:23	Broken Bag Detector	6100A Melt Broken Bag Detector	1.467
4/29/2019 13:24	Broken Bag Detector	6100A Melt Broken Bag Detector	1.386